GORMAN-RUPP
ROTARY GEAR PUMPS

GHS SERIES
HEAVY DUTY STANDARD; D, G, J, N & R HYD SIZE
ROTARY GEAR PUMP

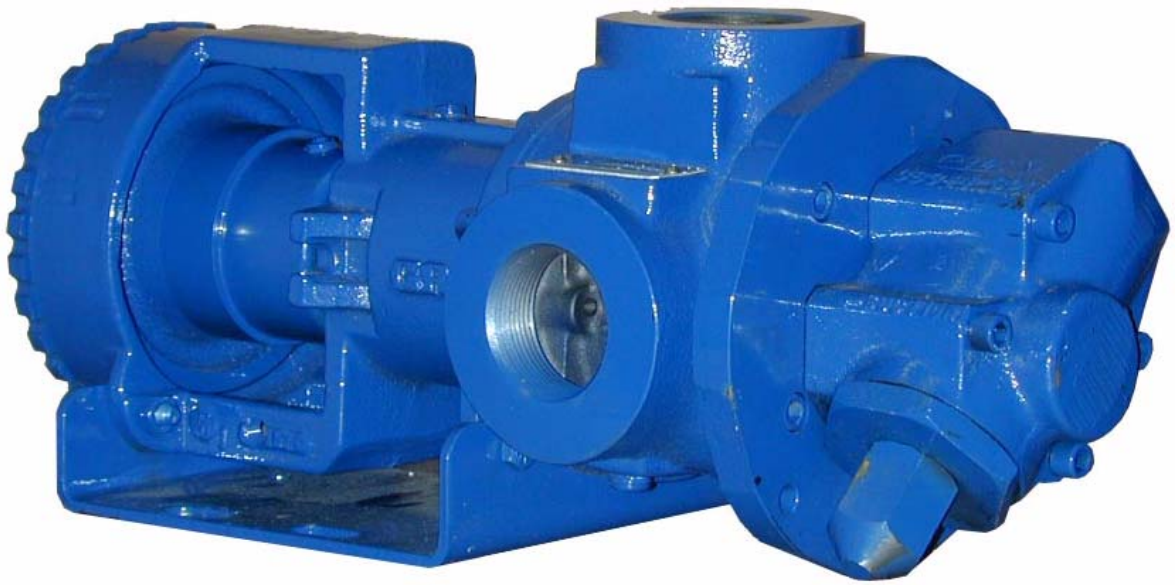

The GHS iron series is designed for applications in the operating ranges noted below. These units are available with head and backhead jackets for temperature control, carbon graphite bushings for low viscosity liquids, silicon carbide bushings for wear resistance, and numerous shaft seal options described on the following pages

This heavy duty series provides superior rotor shaft support and an integral, maintenance-free radial/thrust bearing for reduced deflection and wear.

FEATURES

400 PSI CAPABILITY

BALL BEARING THRUST CONTROL

ROTOR END CLEARANCE EXTERNALLY ADJUSTABLE

OPTIMIZED LOAD SUPPORT AND HIGH STRENGTH SHAFT

HIGH STRENGTH, COMPUTER PROFILED GEARING FOR QUIET OPERATION

FLEXIBLE SEAL DESIGN ALLOWS FOR A VARIETY OF INDUSTRY STANDARD SEALS OR PACKING

INTERNAL SEAL VENT

DEEP END FEED DESIGN

OPERATING RANGE

CAPACITY	(GPM) :	(3 TO 295)
	[LPM] :	[11 TO 1116]
PRESSURE	(PSI) :	[0 TO 300)
	[BAR] :	[0 TO 20.7]
VISCOSITY	(SSU) :	(28 TO 2,000,000)
	[cSt] :	[1 TO 440,000]
TEMPERATURE	(F) :	(-60° TO 675°)
	[C] :	[-51° TO 358°]

APPLICATIONS

USE WITH ANY CLEAN LIQUID COMPATIBLE WITH CAST IRON

- ★ BOOSTER SERVICE
- ★ CIRCULATING
- ★ FILTERING
- ★ LUBRICATING
- ★ TRANSFERRING
- ★ LOW PRESSURE FLUID POWER
- ★ METERING

SUPERSEDES ALL PREVIOUS ISSUES
©2010 The Gorman-Rupp Company

Standard Construction

EXTERIOR	ROTOR & IDLER	HOUSING PORTS	BUSHINGS	IDLER PIN	SHAFT	SHAFT SEALING		ROTATION	INTERNAL RELIEF VALVE	
						MECH. SEAL ●	PACKING ■		MATERIAL	SETTING
CAST IRON	HIGH STRENGTH IRON	90° TAPPED 125# FLG	BRONZE	HARDENED STEEL	STEEL	VITON	CARBON FIBER	C.W.	DUCTILE IRON	75 PSI [5 BAR]

Standard Models

G H S 1 DC 3 – B

GEAR | DUTY | DESIGN | PORT SIZE | HYDRAULIC SIZE | SEAL | STYLE

MODEL NUMBER	NOM. CAPACITY - SPEED				MAXIMUM				SHIPPING DATA	
	MAXIMUM		ALTERNATIVE		DIFFERENTIAL PRESSURE-PSI [BAR]			TEMP.		
	GPM [LPM]	RPM 60 Hz [50 HZ]	GPM [LPM]	RPM ② 60 Hz [50 Hz]	BELOW 38 SSU [4 cSt]	38 TO 100 SSU [21 cSt]	100 TO 250,000 SSU [55,000 cSt]	°F [°C]	Weight LBS [KG]	Volume CU. FT.
GHS 1DC 3-B ● ① **GHS 1DC 4-B** ■	9 [28]	1750 [1460]	6 [19]	1150 [960]	100 [7]	150 [10]	300 [20.7]	● 400 [204]	30 [13,6]	2.9
GHS 1DE 3-B ● ① **GHS 1DE 4-B** ■	11 [35]		7 [22]						30 [13,6]	2.9
GHS 1-1/2 GC 3-B ● **GHS 1-1/2 GC 4-B** ■	16 [50]		10 [32]						54 [24,5]	2.9
GHS 2 GC 3-B ● GHS 2 GC 4-B ■									54 [24,5]	2.9
GHS 1-1/2 GF 3-B ● **GHS 1-1/2 GF 4-B** ■	23 [73]		15 [47]						54 [24,5]	2.9
GHS 2 GF 3-B ● GHS 2 GF 4-B ■									54 [24,5]	2.9
GHS 1-1/2 GH 3-B ● **GHS 1-1/2 GH 4-B** ■	31 [98]		20 [63]						54 [24,5]	2.9
GHS 2 GH 3-B ● GHS 2 GH 4-B ■									54 [24,5]	2.9
GHS 1-1/2 GJ 3-B ● ③ GHS 1-1/2 GJ 4-B ■	38 [120]		25 [79]				200 [14]	■ 500 [260]	54 [24,5]	2.9
GHS 2 GJ 3-B ● ③ **GHS 2 GJ 4-B** ■									54 [24,5]	2.9
GHS 2 JG 3-B ● **GHS 2 JG 4-B** ■	40 [126]	1150 [960]	30 [95]	870 [725]					125 [57]	5.3
GHS 2-1/2 JG 3-B ● GHS 2-1/2 JG 4-B ■							300 [20.7]		125 [57]	5.3
GHS 3 JG 3-B ● GHS 3 JG 4-B ■									125 [57]	5.3

STANDARD MODELS CONT.

NOTE: RECOMMENDED PORT SIZES ARE SHOWN IN **BOLDFACE**. EXAMPLE: **GHS 2JG 3-B**

● MECHANICAL SEAL
■ LIPSEAL/PACKING

① 3450 [2875] RPM PERMISSIBLE TO 1,000 SSU [220 Cts.] AND 100 PSI [7 BAR]
② MAXIMUM SPEED FOR AMMONIA MODELS.
③ PUMP LIMITED TO 200 PSI MAXIMUM PRESSURE.

©2010 The Gorman-Rupp Company

Standard Models Cont'd

MODEL NUMBER	NOM. CAPACITY - SPEED				MAXIMUM				SHIPPING DATA	
	MAXIMUM		ALTERNATIVE		DIFFERENTIAL PRESSURE-PSI [BAR]			TEMP.		
	GPM [LPM]	RPM 60 Hz [50 HZ]	GPM [LPM]	RPM (1) 60 Hz [50 Hz]	BELOW 38 SSU [4 cSt]	38 TO 100 SSU [21 cSt]	100 TO 250,000 SSU [55,000 cSt]	°F [°C]	Weight LBS [KG]	Volume CU. FT.
GHS 2 JJ 3-B ● / GHS 2 JJ 4-B ■	56 [177]	1150 [960]	42 [133]	870 [725]	100 [7]	150 [10]	300 (3) [20.7]	● 400 [204]	125 [57]	5.3
GHS 2-1/2 JJ 3-B ● / GHS 2-1/2 JJ 4-B ■									125 [57]	5.3
GHS 3 JJ 3-B ● / GHS 3 JJ 4-B ■									125 [57]	5.3
GHS 2 JL 3-B ● / GHS 2 JL 4-B ■	77 [243]		58 [183]						125 [57]	5.3
GHS 2-1/2 JL 3-B ● / GHS 2-1/2 JL 4-B ■									125 [57]	5.3
GHS 3 JL 3-B ● / GHS 3 JL 4-B ■									125 [57]	5.3
GHS 2 JP 3-B ● / GHS 2 JP 4-B ■ (2)	107 [338]		81 [256]				200 [14]		125 [57]	5.3
GHS 2-1/2 JP 3-B ● / GHS 2-1/2 JP 4-B ■ (2)									125 [57]	5.3
GHS 3 JP 3-B ● / GHS 3 JP 4-B ■ (2)									125 [57]	5.3
GHS 1-1/2 NK 3-B ● / GHS 1-1/2 NK 4-B ■	99 [375]		60 [189]				300 (3) [20.7]	■ 500 [260]	167 [75,7]	5.3
GHS 2 NK 3-B ● / GHS 2 NK 4-B ■									167 [75,7]	5.3
GHS 2-1/2 NK 3-B ● / GHS 2-1/2 NK 4-B ■									167 [75,7]	5.3
GHS 3 NK 3-B ● / GHS 3 NK 4-B ■									167 [75,7]	5.3
GHS 2 NM 3-B ● / GHS 2 NM 4-B ■	132 [500]	960 [960]	80 [252]	580 [480]					167 [75,7]	5.3
GHS 2-1/2 NM 3-B ● / GHS 2-1/2 NM 4-B ■									167 [75,7]	5.3
GHS 3 NM 3-B ● / GHS 3 NM 4-B ■									167 [75,7]	5.3
GHS 2 NP 3-B ● / GHS 2 NP 4-B ■ (2)	165 [624]		99 [312]				200 [14]		167 [75,7]	5.3
GHS 2-1/2 NP 3-B ● / GHS 2-1/2 NP 4-B ■ (2)									167 [75,7]	5.3
GHS 3 NP 3-B ● / GHS 3 NP 4-B ■ (2)									167 [75,7]	5.3

STANDARD MODELS CONT.

NOTE: RECOMMENDED PORT SIZES ARE SHOWN IN **BOLDFACE**. EXAMPLE: **GHS 2JG 3-B**

(1) MAXIMUM SPEED FOR AMMONIA MODELS.

(2) PUMP LIMITED TO 200 PSI MAXIMUM PRESSURE.

(3) FOR 200-300 PSI OPERATION, HOUSING BUSHING IS RECOMMENDED. CONSULT BUSHING LIMITATION TABLE OR CONSULT FACTORY.

● MECHANICAL SEAL
■ LIPSEAL/PACKING

SUPERSEDES ALL PREVIOUS ISSUES
©2010 The Gorman-Rupp Company

Standard Models Cont'd

MODEL NUMBER	NOM. CAPACITY – SPEED				MAXIMUM				SHIPPING DATA	
	MAXIMUM		ALTERNATIVE		DIFFERENTIAL PRESSURE – PSI [BAR]			TEMP.		
	GPM [LPM]	RPM 60 Hz [50 HZ]	GPM [LPM]	RPM (1) 60 Hz [50 Hz]	BELOW 38 SSU [4 cSt]	38 TO 100 SSU [21 cSt]	100 TO 250,000 SSU [55,000 cSt]	°F [°C]	Weight LBS [KG]	Volume CU. FT.
GHS 2 RM 3-B ● GHS 2 RM 4-B ■	172 [542]	720 [600]	115 [362]	480 [400]	100 [7]	150 [10]	300 [20.7]	● 400 [204]	301 [136]	10.7
GHS 2-1/2 RM 3-B ● ⊩ GHS 2-1/2 RM 4-B ■ ⊩									301 [136]	10.7
GHS 3 RM 3-B ● ⊩ **GHS 3 RM 4-B ■ ⊩**									301 [136]	10.7
GHS 4 RM 3-B ● ⊩ GHS 4 RM 4-B ■ ⊩									301 [136]	10.7
GHS 2-1/2 RP 3-B ● ⊩ GHS 2-1/2 RP 4-B ■ ⊩	215 [678]		143 [451]						301 [136]	10.7
GHS 3 RP 3-B ● ⊩ **GHS 3 RP 4-B ■ ⊩**									301 [136]	10.7
GHS 4 RP 3-B ● ⊩ GHS 4 RP 4-B ■ ⊩								■ 500 [260]	301 [106]	10.7
GHS 2-1/2 RR 3-B ● ⊩ GHS 2-1/2 RR 4-B ■ ⊩	255 [804]		170 [536]						301 [136]	10.7
GHS 3 RR 3-B ● ⊩ GHS 3 RR 4-B ■ ⊩									301 [136]	10.7
GHS 4 RR 3-B ● ⊩ **GHS 4 RR 4-B ■ ⊩**									301 [136]	10.7
GHS 3 RS 3-B ● ⊩ (2) GHS 3 RS 4-B ■ ⊩ (2)	295 [930]		196 [618]				200 [14]		301 [136]	10.7
GHS 4 RS 3-B ● ⊩ (2) **GHS 4 RS 4-B ■ ⊩ (2)**									301 [136]	10.7

(1) MAXIMUM SPEED FOR AMMONIA MODELS.

(2) PUMP LIMITED TO 200 PSI MAXIMUM PRESSURE

● MECHANICAL SEAL

■ LIPSEAL/PACKING

⊩ PORTS ARE COMPATIBLE WITH 125# ANSI CAST IRON FLANGES. ALL OTHER PORTS ARE TAPPED NPT FOR ANSI PIPE. OPTIONAL [DIN] FLANGES OR TAPPED [BSP] PORTS AVAILABLE FOR EXPORT MARKET.

SUPERSEDES ALL PREVIOUS ISSUES
©2010 The Gorman-Rupp Company

APPLICATION RECOMMENDATIONS:		
APPLICATION	**OPTIONS REQUIRED (Select One From Each Row)**	**OPERATING LIMITATIONS**
HIGH TEMPERATURE	25U, 25V, OR 25W 35J – 35M (AS REQ'D) 40M, 40W 61H, OR 65Q 70F OR 70K	TEMPERATURE: 675°F MAX. PRESSURE: 200 PSI MAX.
AMMONIA	25G OR 25H 40N 60K 70E 90A	PRESSURE: 200 PSI MAX. 2/3 RATED SPEED 4 FEET NPSHr
LP GAS	25G OR 25H 40F OR 40N 70D OR 70E	PRESSURE: 200 PSI MAX. 3 FEET NPSHr
ASPHALT	25U, 25V OR 25W 35J–35M (AS REQ'D) 40G, 40M, 40W 41R, 41W 65S 70B, 70K 71K	TEMPERATURE: 500°F MAX.
JACKETED	40G, 40J, 40K, 40W, 41U, 41W 70B, 70G, 70K 71K, 71M	LIMIT JACKET PRESSURE TO 150 PSIG

NOTE: PROPER PUMP APPLICATION REQUIRES CONSIDERATION OF ADDITIONAL FACTORS. PLEASE REVIEW APPLICATION GUIDE IN SECTION 500 OR CONSULT THE FACTORY.

SUPERSEDES ALL PREVIOUS ISSUES

©2010 The Gorman-Rupp Company

Basic Dimensions

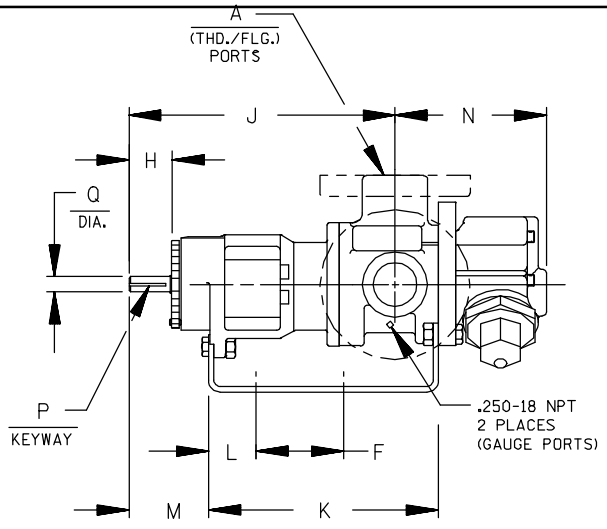

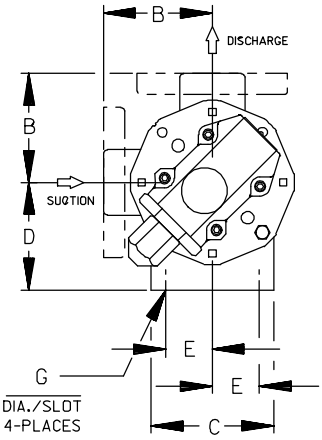

CAD FILE NO.: 16669

MODEL NUMBERS	PUMP DIMENSIONS - INCHES [MILLIMETERS]														
	A	B	C	D	E	F	G	H	J	K	L	M	N	P	Q
GHS D	1"	2.50 [64] ✳ 2.75 [70] † 3.19 [81] ⊢ 4.00 [102] ⊢†	4.00 [102]	3.50 [89] ✳ 4.50 [114] 5.25 [133]	1.62 [41]	5.50 [140]	.41 [10]	1.16 [30]	8.43 [214]	7.54 [192]	1.09 [28]	2.29 [58]	4.98 [127]	.12 [3] × .75 [19]	.50 [13]
GHS G GHA G	1-1/2"	3.50 [89] ✳ 3.75 [95] †	4.88 [124]	3.50 [89] ✳ 4.50 [114] 5.25 [133]	1.62 [41]	8.00 [203]	.41 [10]	1.62 [41]	12.06 [306]	10.72 [272]	1.52 [39]	3.35 [85]	5.70 [145]	.19 [5] × 1.25 [32]	.75 [19]
	2"	4.00 [102] ⊢		6.25 [159]											
GHS J GHA J	2"	4.50 [114] ✳	6.88 [175]	5.25 [133] ✳	2.88 [73]	10.00 [254]	.44 [11]	2.50 [64]	15.68 [398]	14.31 [363]	2.77 [70]	4.48 [114]	8.50 [216]	.25 [6] × 2.00 [51]	1.00 [25]
	2-1/2"	5.00 [127] † 6.00 [152] ⊢		6.25 [159] 7.00 [178]											
	3"	6.31 [160] ⊢		8.00 [203]											
GHS N GHA N	1-1/2"	5.12 [130] ✳	8.00 [203]	4.50 [114]	2.88 [73]	10.00 [254]	.44 [11]	2.58 [66]	17.45 [443]	15.14 [385]	2.69 [68]	4.56 [116]	7.59 [193]	.25 [6] × 2.00 [51]	1.12 [32]
	2"	5.25 [133] ⊢		5.25 [133] ✳ 6.25 [159]					16.37 [416] ✳						
	2-1/2"			7.00 [178]											
	3"	7.19 [183] ⊢		8.00 [203]									8.72 [221] ✳		
GHS R GHA R	2"	6.50 [165] ✳	10.50 [267]	7.00 [178]	3.75 [95]	13.75 [349]	.52 [13]	2.25 [57]	17.87 [454]	17.36 [441]	1.86 [47]	4.70 [119]	11.31 [287]	.38 [10] × 1.88 [48]	1.44 [37]
	2-1/2"														
	3"	7.19 [183] ⊢													
	4"														

⊢ PORTS ARE COMPATIBLE WITH 125# OR 250# ANSI CAST IRON FLANGES. ALL OTHER PORTS ARE TAPPED NPT FOR ANSI PIPE. OPTIONAL (DIN) FLANGES OR TAPPED (BSP) PORTS AVAILABLE FOR EXPORT MARKET.

✳ STANDARD DIMENSION † 180° HOUSING

SUPERSEDES ALL PREVIOUS ISSUES
©2010 The Gorman-Rupp Company

GHS & GHA

DIRECT FLEX DRIVE OPTION DIMENSIONS

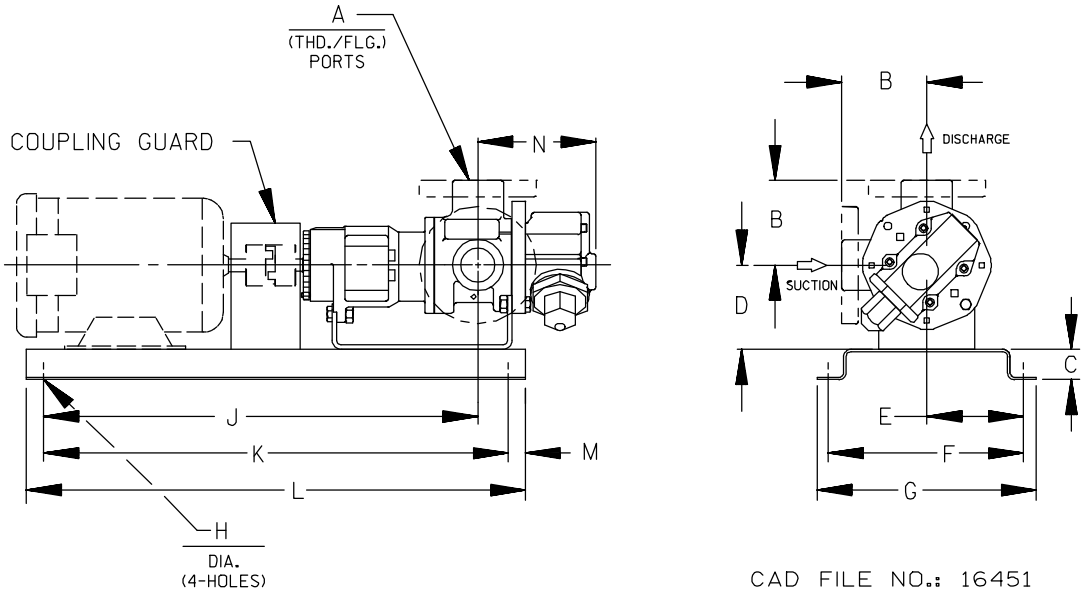

CAD FILE NO.: 16451

PUMP MODEL	PUMP DIMENSIONS - INCHES[MILLIMETERS]														
	A	MOTOR FRAME	B	C	D	E	F	G	H	J	K	L	M	N
GHS D	1"	56/56H	2.50 [64] ✳	2.00 [51]	3.50 [89] ✳	4.44 [113]	8.88 [226]	10.14 [258]	.56 [14]	20.29 [515]	19.25 [489]	25.25 [641]	3.00 [76]	4.97 [126]
		143T/145T	2.75 † [70]	4.00 [102]	4.50 [114]	7.75 [197]	15.50 [394]	17.50 [445]		26.66 [677]	23.50 [597]	33.50 [851]	5.00 [127]	
		182T/184T	3.19 ⊢ [81]		5.25 [133]									
		213T/215T	4.00 † ⊢ [82]											
GHS G GHA G	1- ½"	56/56H	3.50 ✳ [89]	2.00 [51]	3.50 [89] ✳	4.44 [113]	8.88 [226]	10.14 [258]	.56 [14]	19.93 [506]	19.25 [489]	25.25 [641]	3.00 [76]	5.70 [145]
		143T/145T		4.00 [102]	4.50 [114]	7.75 [197]	15.50 [394]	17.50 [445]		26.30 [668]	23.50 [597]	33.50 [851]	5.00 [127]	
		182T/184T	3.75 † [95]		5.25 [133]									
	2"	213T/215T			6.25 [159]									
		254T/256T	4.00 ⊢ [102]											
GHS J GHA J	2"	182T/184T	4.50 ✳ [114]	4.00 [102]	4.50 [114]	9.50 [241]	19.00 [483]	21.00 [533]	.69 [18]	36.28 [922]	35.50 [902]	45.50 [1156]	5.00 [127]	8.49 [216]
		213T/215T			5.25 [133] ✳									
	2- ½"	254T/256T	5.00 † [127]		6.25 [159]									
		284T/286T	6.00 † ⊢ [152]		7.00 [178]									
	3"	324T/326T	6.31 ⊢ [160]		8.00 [203]									
GHS N GHA N	1- ½"	182T/184T	5.12 ✳ [130]	4.00 [102]	4.50 [114]	9.50 [241]	19.00 [483]	21.00 [533]	.89 [18]	36.87 [936]	35.50 [902]	45.50 [1156]	5.00 [127]	8.70 [221]
	2"	213T/215T			5.25 [133] ✳									
		254T/256T	5.25 ⊢ [133]		6.25 [159]									
	2- ½"	284T/286T			7.00 [178]									
	3"	324T/326T	7.19 ⊢ [183]		8.00 [203]					37.98 [965]				7.59 [193]

✳ STANDARD DIMENSION

⊢ PORTS ARE COMPATIBLE WITH 125# OR 250# ANSI CAST IRON FLANGES. ALL OTHER PORTS ARE TAPPED NPT FOR ANSI PIPE. OPTIONAL (DIN) FLANGES OR TAPPED (BSP) PORTS AVAILABLE FOR EXPORT MARKET.

† 180° HOUSING

©2010 The Gorman-Rupp Company

GHS & GHA

DIRECT FLEX DRIVE OPTIONS

(Drive Assembly Number Includes Base, Coupling & Guard, But **NOT** the Motor)

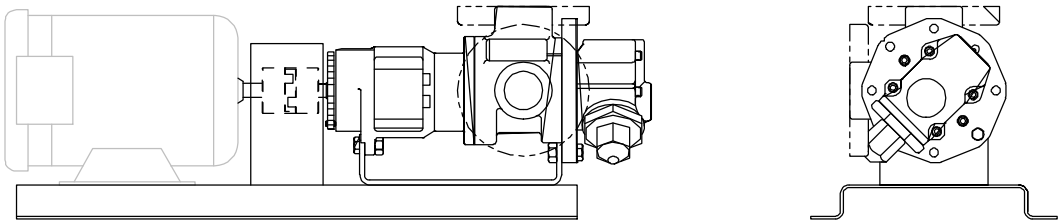

PUMP MODEL NUMBER	RPM	FRAME	MTG. FT. OPTION REQ.	DRIVE ASSY NO.
GHS GHA D	3450 1750 1150 850	56/56H	STD	90451–086
		143T/145T	STD	90451–018
		182T/184T	80F	90451–058
		213T/215T	80J	90451–062
GHS GHA G	1750 1150 850	56/56H	STD	90451–160
		143T/145T	STD	90451–162
		182T/184T	80F	90451–168
		213T/215T	80J	90451–176
		254T	80P	90451–180
GHS GHA J	1150 850	182T/184T	80F	90451–260
		213T/215T	STD	90451–264
		254T/256T	80P	90451–272
		284T/286T	80S	90451–280
		324T/326T	80V	90451–288
GHS GHA N	850	254T/256T	80P	90451–390
		284T/286T	80S	90451–398
		324T/326T	80V	90451–406

NOTE: CONSULT FACTORY FOR;

1. **HORSEPOWERS & FRAMES NOT SHOWN**
2. **DRIP PAN BASES**

©2010 The Gorman-Rupp Company

GHS & GHA

GRR REDUCER C-FLANGE FLEX DRIVE OPTION DIMENSIONS
(56C – 215TC Frame Size Range)

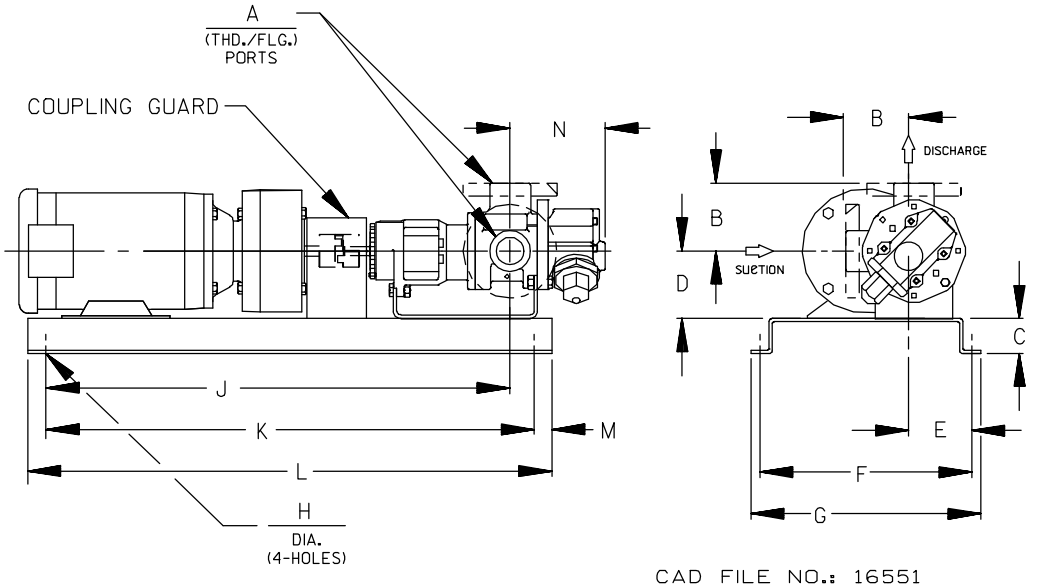

CAD FILE NO.: 16551

PUMP MODEL	PUMP DIMENSIONS - INCHES[MILLIMETERS]													
	A	MOTOR FRAME	B	C	D	E	F	G	H	J	K	L	M	N
GHS D	1"	56C	2.50✳ [64]	2.00 [51]	3.50✳ [89]	4.41 [112]	13.00 [330]	15.00 [381]	.56 [14]	26.58 [675]	25.50 [648]	31.50 [800]	3.00 [76]	4.98 [126]
		143TC/145TC	2.75 † [70]											
		184C	3.19 ⊢ [81]											
		182TC/184TC	4.00† ⊢ [82]		4.50 [114]	5.50 [140]	14.62 [372]	16.62 [422]		37.08 [942]	37.25 [946]	43.25 [1098]		
GHS G GHA G	1- ½"	56C	3.50✳ [89]	2.00 [51]	3.50✳ [89]	4.41 [112]	13.00 [330]	15.00 [381]	.56 [14]	26.22 [667]	25.50 [648]	31.50 [800]	3.00 [76]	5.72 [145]
		143TC/145TC	3.75 † [95]		4.50 [114]									
		184C												
	2"	182TC/184TC	4.00 ⊢ [102]			5.50 [140]	14.62 [372]	16.62 [422]		36.72 [934]	37.25 [946]	43.25 [1098]		
		213TC/215TC			5.25 [133]									
GHS J GHA J	2"	182TC/184TC	4.50✳ [114]	2.00 [51]	4.50 [114]	5.50 [140]	14.62 [372]	16.62 [422]	.56 [14]	35.96 [913]	37.25 [946]	43.25 [1098]	3.00 [76]	8.50 [216]
	2- ½"	182TC/184TC	5.00† [127]											
		213TC/215TC	6.00† ⊢ [152]		5.25✳ [133]									
	3"		6.31 ⊢ [160]											
GHS N GHA N	1- ½"	182TC/184TC	5.12✳ [130]	2.00 [51]	4.50 [114]	5.50 [140]	14.62 [372]	16.62 [422]	.56 [14]	38.88 [931]	37.25 [946]	43.25 [1098]	3.00 [76]	8.71 [221]
	2"		5.25 ⊢ [133]											
	2- ½"	213TC/215TC	7.19 ⊢ [183]		5.25✳ [133]					36.97 [939]				
	3"													

✳ STANDARD DIMENSION

⊢ PORTS ARE COMPATIBLE WITH 125# OR 250# ANSI CAST IRON FLANGES. ALL OTHER PORTS ARE TAPPED NPT FOR ANSI PIPE. OPTIONAL (DIN) FLANGES OR TAPPED (BSP) PORTS AVAILABLE FOR EXPORT MARKET.

† 180° HOUSING

©2010 The Gorman-Rupp Company

GHS & GHA

GRR REDUCER C-FLANGE FLEX DRIVE OPTION DIMENSIONS
(213TC – 326TC Frame Size Range)

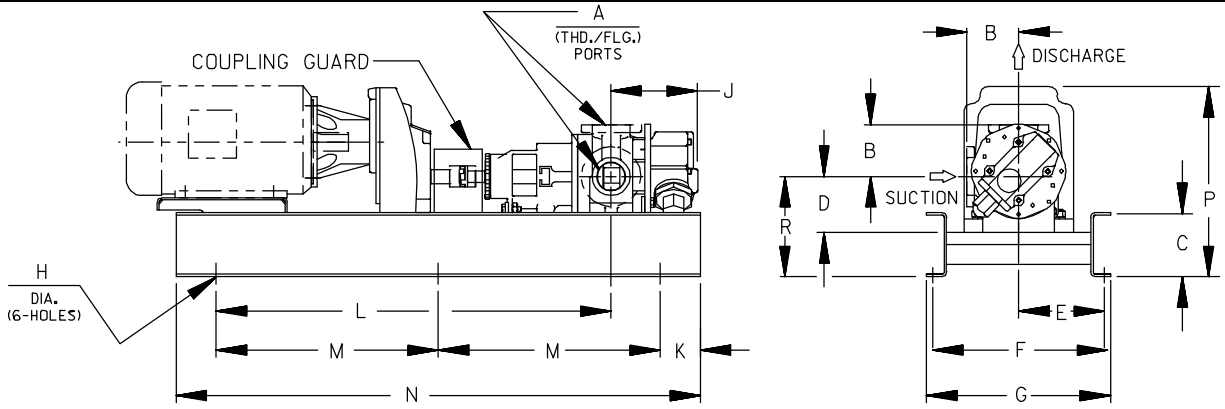

CAD FILE NO.: 16640

PUMP MODEL	MOUNTING DIMENSIONS															
	A	MOTOR FRAME	B	C	D	E	F	G	H	J	K	L	M	N	P	R
GHS J	2"	213TC/215TC	4.50 ✳ [114]	6.00 [152]	6.25 [159]	10.12 [257]	20.25 [514]	22.50 [572]	.69 [18]	7.59 [193] ✳	5.00 [127]	41.58 [1056]	23.00 [584]	56.00 [1422]	18.14 [461]	10.58 [269]
		254TC/256TC	5.00 † [127]													
GHA J	2 1/2"	254TC/256TC	6.00 ⊢ [152] †							8.70 [221]		47.00 [1194]	25.75 [654]	61.50 [1562]	20.91 [531]	10.66 [271]
	3"	284TC/286TC	6.31 ⊢ [160]													
GHS N	1 1/2"	213TC/215TC	5.12 ✳ [130]	6.00 [152]	6.25 [159]	10.12 [257]	20.25 [514]	22.50 [572]	.69 [18]	7.59 [193] ✳	5.00 [127]	41.32 [1051]	23.00 [584]	56.00 [1422]	15.75 [400]	18.14 [461]
	2"	254TC/256TC	5.25 ⊢ [130]													
GHA N	2 1/2"	254TC/256TC	7.19 ⊢ [183]							8.70 [221]		47.69 [1211]	25.75 [654]	61.50 [1562]		20.91 [531]
	3"	284TC/286TC														
GHS R	2"	182TC/184TC	6.50 [165]	8.00 [203]	7.00 [178]	10.38 [264]	20.75 [527]	23.00 [584]	.69 [18]	11.31 [287]	5.00 [127]	38.95 [989]	22.62 [575]	55.25 [11403]	19.86 [504]	12.66 [322]
		213TC/215TC														
	2 1/2"	213TC/215TC										44.25 [1124]	25.28 [642]	60.56 [1538]	20.26 [515]	12.39 [315]
		254TC/256TC	7.19 ⊢ [183]													
		254TC/256TC										49.20 [1250]	27.75 [705]	65.50 [1664]	23.58 [585]	12.50 [318]
		284TC/286TC														
GHA R	3"	284TC/286TC	6.50 [165]	7.00 [178]	7.00 [178]	11.38 [289]	22.75 [578]	25.00 [635]	.69 [18]	11.31 [287]	5.00 [127]	53.01 [1346]	29.75 [756]	69.50 [1756]	25.94 [659]	12.50 [318]
		324TC/326TC				10.38 [264]	22.75 [578]	25.00 [635]				57.95 [1472]	32.12 [816]	74.25 [1886]	28.44 [667]	13.50 [343]
	4"	284TC/286TC	7.19 ⊢ [183]											74.25 [1886]	26.44 [667]	13.50 [343]

STANDARD DIMENSION

⊢ PORTS ARE COMPATIBLE WITH 125# OR 250# ANSI CAST IRON FLANGES. ALL OTHER PORTS ARE TAPPED NPT FOR ANSI PIPE. OPTIONAL (DIN) FLANGES OR TAPPED (BSP) PORTS AVAILABLE FOR EXPORT MARKET.

† 180° HOUSING

©2010 The Gorman-Rupp Company

GHS & GHA

GRR REDUCER C-FLANGE FLEX DRIVE OPTIONS

(Drive Assy Number Includes Base, Coupling, Guard & Gear Reducer, But **NOT** the Motor)

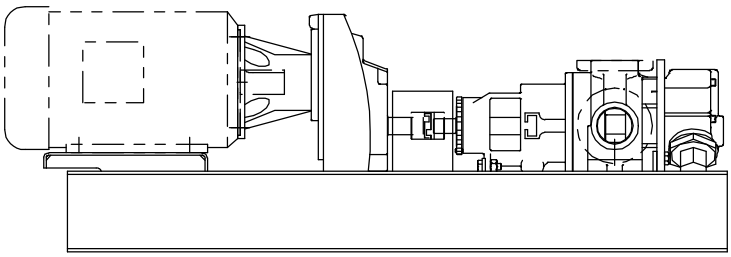

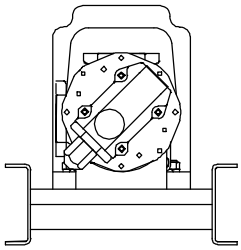

PUMP MODEL NUMBER	PUMP RPM @1750	PUMP RPM @1150	REDUCER ① RATIO	REDUCER ① MAX.HP	FRAME	MTG. FT. OPTION	DRIVE ASSY NO.
GHS GHA D	875	575	2.00:1	5.65	56C	STD	90453–510
				11.70	143TC/145TC	STD	90453–516
				11.70	182C/184C	80F	90453–519
				13.01	182TC/184TC	80F	90453–526
	580	383	3.00:1	3.76	56C	STD	90453–530
				8.10	143TC/145TC	STD	90453–533
				8.10	182C/184C	80F	90453–539
				10.62	182TC/184TC	80F	90453–546
	440	288	4.00:1	2.82	56C	STD	90453–550
				5.90	143TC/145TC	STD	90453–553
				5.90	182C/184C	80F	90453–562
				7.24	182TC/184TC	80F	90453–566
	350	230	5.00:1	2.26	56C	STD	90453–570
				5.20	143TC145TC	STD	90453–573
				5.20	182C/184C	80F	90453–582
				5.98	182TC/184TC	80F	90453–586
GHS GHA G	875	575	2.00:1	5.65	56C	STD	90453–610
				11.70	143TC/145TC	STD	90453–613
				11.70	182C/184C	80F	90453–622
				13.01	182TC/184TC	80F	90453–626
	580	383	3.00:1	3.76	56C	STD	90453–630
				8.10	143TC/145TC	STD	90453–633
				8.10	182C/184C	80F	90453–642
				10.62	182TC/184TC	80F	90453–646
				10.62	213TC/215TC	80J	90453–648
	440	288	4.00:1	2.82	56C	STD	90453–660
				5.90	143TC/145TC	STD	90453–663
				5.90	182C/184C	80F	90453–672
				7.24	182TC/184TC	80F	90453–676
				7.24	213TC	80J	90453–677
	350	230	5.00:1	2.26	56C	STD	90453–690
				5.20	143TC/145TC	STD	90453–693
				5.20	182C/184C	80F	90453–702
				5.98	182TC/184TC	80F	90453–706
				5.98	213TC	80J	90453–708

(CONT'D)

① Listed reducer horsepower rated for Standard Service (8–10 hrs/day). For Light Service (3–5 hrs/day) multiply maximum rated horsepower by 1.1. For Heavy Service (16–24 hrs/day) multiply maximum rated horsepower by 0.9.

② Based on 1750 RPM input.

NOTE: CONSULT FACTORY FOR;

1. **HORSEPOWERS & FRAMES NOT SHOWN**
2. **DRIP PAN BASES**

©2010 The Gorman-Rupp Company

GHS & GHA

GRR REDUCER C-FLANGE FLEX DRIVE OPTIONS

(Drive Assy Number Includes Base, Coupling, Guard & Gear Reducer, But **NOT** the Motor)

PUMP MODEL NUMBER	PUMP RPM @1750	PUMP RPM @1150	REDUCER ① RATIO	REDUCER ① MAX.HP	FRAME	MTG. FT. OPTION	DRIVE ASSY NO.
GHS GHA J	875	575	2.00:1	13.01	182TC/184TC	80F	90453–722
				13.01	213TC/215TC	STD	90453–726
				36.29	254TC/256TC	80P	90453–728
				36.29	284TC/286TC	80P	90453–732
	580	383	3.00:1	10.62	182TC/184TC	80F	90453–737
				10.62	213TC/215TC	80J	90453–741
	555	365	3.15:1	25.76	254TC/256TC	80P	90453–743
				42.96	284TC/286TC	80P	90453–746
	440	288	4.00:1	7.24	182TC/184TC	80F	90453–752
				7.24	213TC	80J	90453–754
	350	230	5.00:1	5.98	182TC/184TC	80F	90453–769
				5.98	213TC	STD	90453–769
				16.01	215TC	80P	90453–774
				30.49	254TC/256TC	80J	90453–778
	278	183	6.30:1	5.94	182TC/184TC		90453–850
				13.36	213TC/215TC	80F	90453–852
				23.43	254TC/256TC		90453–853
	219	144	8.00:1	9.47	182TC/184TC	80F	90453–856
				18.48	213TC/215TC	80F	90453–857
				18.48	254TC/256TC		90453–858
GHS GHA N	875	575	2.00:1	13.01	184TC	80F	90453–795
				13.01	213TC/215TC	STD	90453–799
				36.29	254TC/256TC	80P	90453–801
				36.29	284TC/286TC	80P	90453–805
	580	383	3.00:1	8.10	143T/145T	STD	90453–806
				10.62	182TC/184TC	80F	90453–810
				10.62	213TC/215TC	STD	90453–812
	555	365	3.15:1	25.76	254TC/256TC	80P	90453–817
				42.96	284TC/286TC	80P	90453–821
	440	288	4.00:1	7.24	184TC	80F	90453–825
				7.24	213TC	STD	90453–827
	350	230	5.00:1	5.98	182TC/184TC	80F	90453–840
				5.98	213TC	STD	90453–842
				16.01	215TC	STD	90453–845
				30.49	254TC/256TC	STD	90453–847
	278	183	6.30:1	5.94	182TC/184TC		90453–950
				13.36	213TC/215TC	80F	90453–952
				23.43	254TC/256TC		90453–953
	219	144	8.00:1	9.47	182TC/184TC	80F	90453–956
				18.48	213TC/215TC	80F	90453–957
				18.48	254TC/256TC		90453–958

(CONT'D)

① Listed reducer horsepower rated for Standard Service (8–10 hrs/day). For Light Service (3–5 hrs/day) multiply maximum rated horsepower by 1.1. For Heavy Service (16–24 hrs/day) multiply maximum rated horsepower by 0.9.

② Based on 1750 RPM input.

NOTE: CONSULT FACTORY FOR;

1. **HORSEPOWERS & FRAMES NOT SHOWN**
2. **DRIP PAN BASES**

©2010 The Gorman-Rupp Company

GHS & GHA

GRR REDUCER C-FLANGE FLEX DRIVE OPTIONS

(Drive Assy Number Includes Base, Coupling, Guard & Gear Reducer, But **NOT** the Motor)

PUMP MODEL NUMBER	PUMP RPM @1750	PUMP RPM @1150	REDUCER ① RATIO	REDUCER ① MAX.HP	FRAME	MTG. FT. OPTION	DRIVE ASSY NO.
GHS GHA R	700	460	2.50:1	13.96	213TC/215TC	STD	90453–861
				30.62	254TC/256TC	STD	90453–864
				30.62	284TC/286TC	STD	90453–869
	634	417	2.76:1	46.17	324TC/326TC	STD	90453–874
				75.00	364TC	STD	90453–878
	555	365	3.15:1	10.10	213TC/215TC	STD	90453–884
				25.76	254TC/256TC	STD	90453–886
				42.96	284TC/286TC	STD	90453–893
	530	348	3.38:1	66.20	324TC/326TC	STD	90453–898
	438	288	4.00:1	9.42	184TC	STD	90453–901
				20.00	213TC/215TC	STD	90453–904
				38.16	254TC/256TC	STD	90453–911
				38.16	284TC/286TC	STD	90453–916
	420	278	4.13:1	54.4	324TC/326TC	STD	90453–918
	350	230	5.00:1	6.10	184TC	STD	90453–921
				16.01	213TC/215TC	STD	90453–926
				30.49	254TC/256TC	STD	90453–929
				30.49	284TC/286TC	STD	90453–933
	278	184	6.30:1	5.94	184TC	STD	90453–940
				13.36	213TC/215TC	STD	90453–941
				23.43	254TC/256TC	STD	90453–942
	219	145	8.00:1	9.47	184TC	STD	90453–944
				18.48	213TC/215TC	STD	90453–946
				18.48	254TC	STD	90453–947

① Listed reducer horsepower rated for Standard Service (8–10 hrs/day). For Light Service (3–5 hrs/day) multiply maximum rated horsepower by 1.1. For Heavy Service (16–24 hrs/day) multiply maximum rated horsepower by 0.9.

② Based on 1750 RPM input.

NOTE: CONSULT FACTORY FOR;

1. HORSEPOWERS & FRAMES NOT SHOWN
2. DRIP PAN BASES

©2010 The Gorman-Rupp Company

GORMAN-RUPP
ROTARY GEAR PUMPS

PERFORMANCE CURVES

SPEED VS. CAPACITY/HORSEPOWER

NP Hydraulic Size

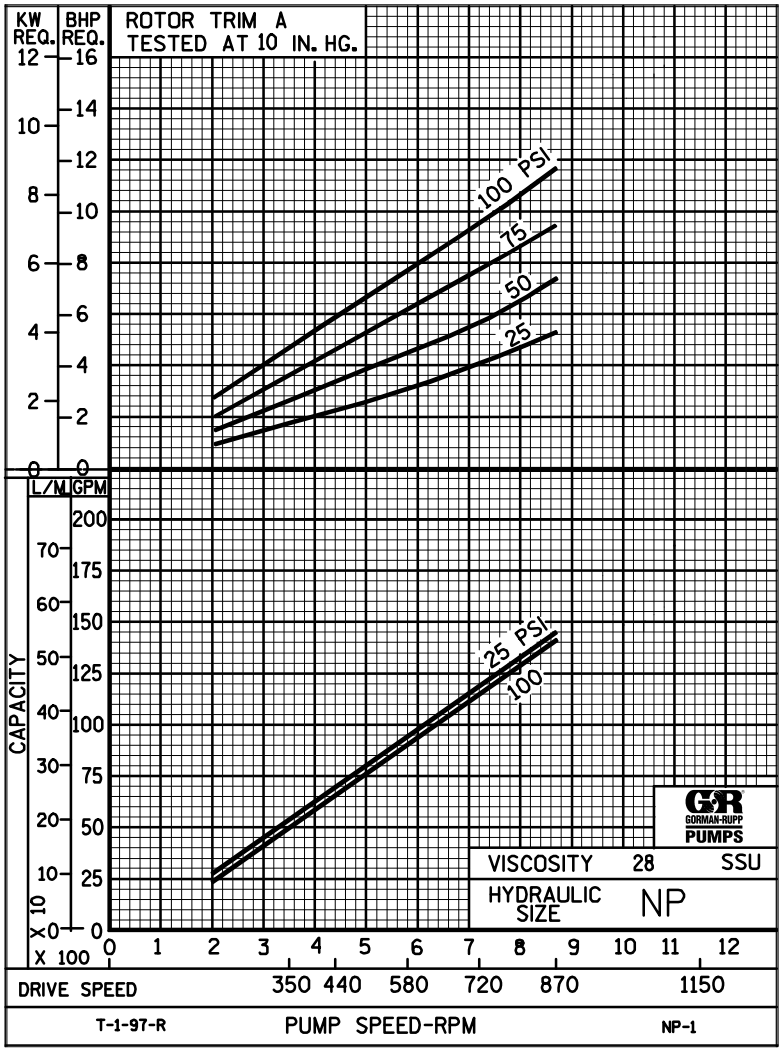

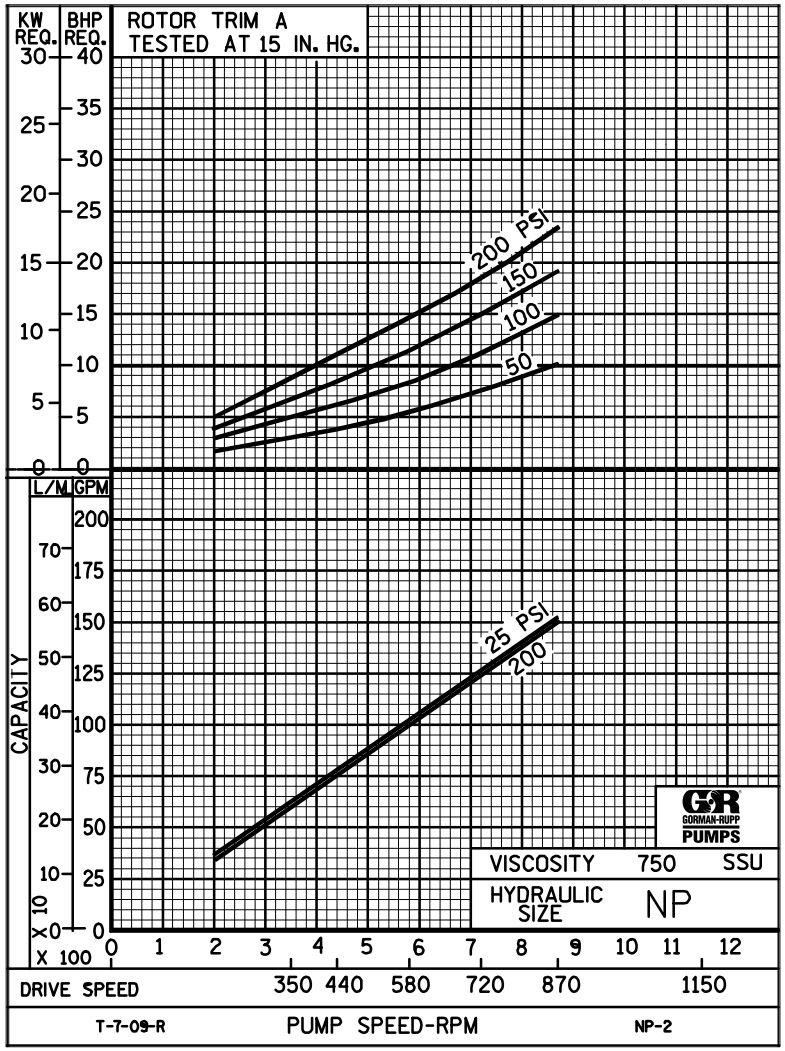

©2010 The Gorman-Rupp Company

GORMAN-RUPP
ROTARY GEAR PUMPS

PERFORMANCE CURVES

SPEED VS. CAPACITY/HORSEPOWER

NP Hydraulic Size

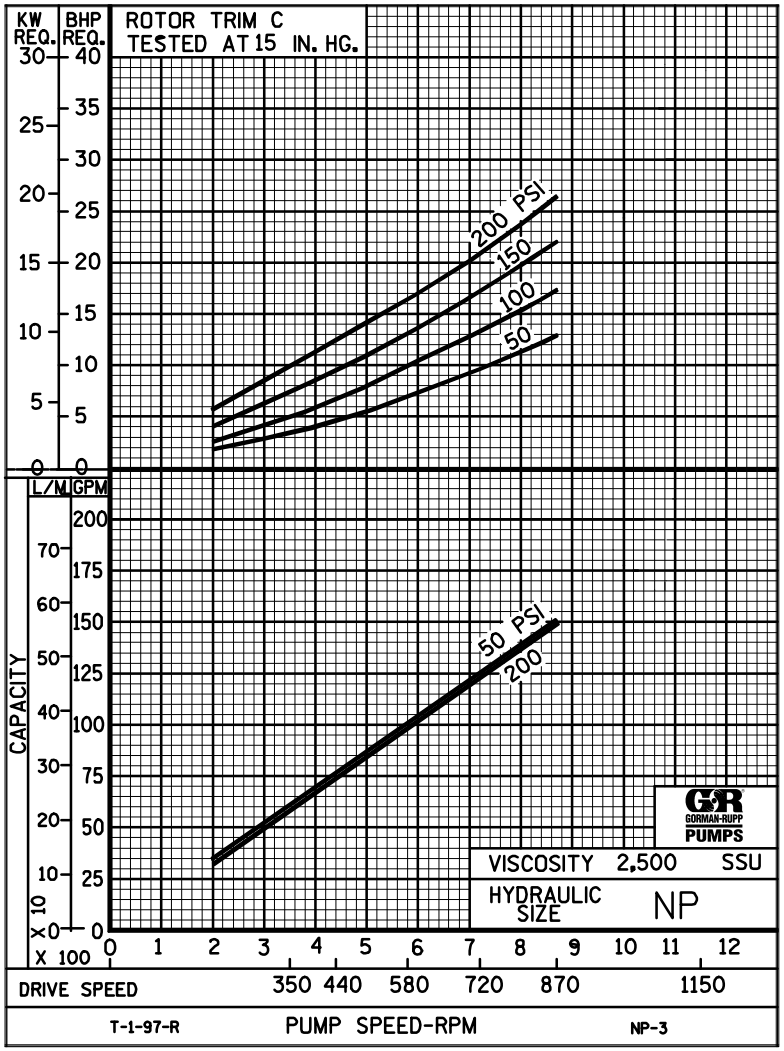

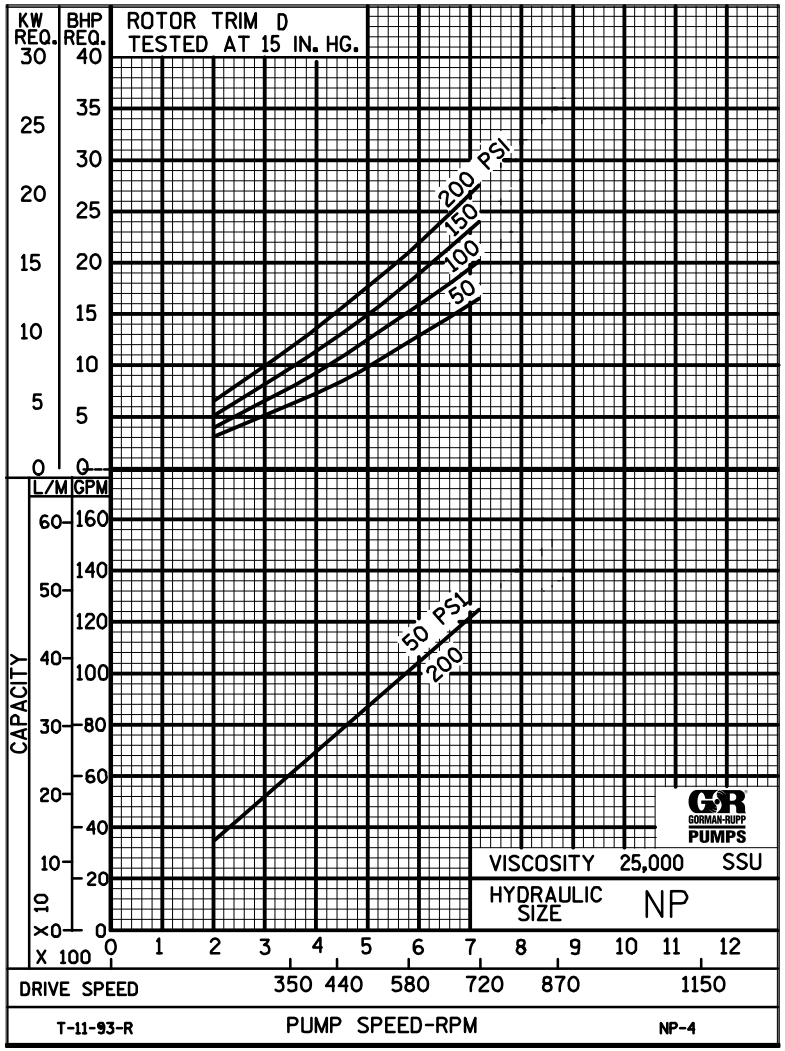

©2010 The Gorman-Rupp Company

GORMAN-RUPP
ROTARY GEAR PUMPS

NP

PUMP HYDRAULIC SIZE CHART

150 GPM
870 RPM

NOMINAL		ROTOR TRIM	VISCOSITY	N.I.P.R.	FRICTION PIPE LOSS (PSI/FT) (Based on Sch 40 Steel Pipe)					FULL BYPASS RELIEF VALVE PRESSURE (PSI)					CAPACITY (GPM) / H.P. REQUIRED							
															DIFFERENTIAL PRESSURE (PSI)							
CAP. GPM	SPEED RPM		(SSU)	(PSIA)	PIPE DIAMETER					CRACKING PRESS. (PSI)					25	50	75	100	150	200	300	400
										LOW PRES R/V			HI PRES R/V		MEDIUM DUTY AND HEAVY DUTY					HEAVY DUTY ONLY		
					2"	2 1/2"	3"	4"	5"	50	75	100	150	200								
150	870	STD	28	4.2	.01	.01	.01	.01	.01	68	96	125			144	143	141	140				
			32		.13	.06	.02	.01	.01						5.3	7.4	9.6	12				
			38	4.2	.16	.07	.03	.01	.01	68	96	125	168		145	144	143	142	141			
			50		.19	.08	.03	.01	.01						5.5	7.6	9.8	12	17			
			70	4.2	.22	.09	.04	.01	.01	70	100	128	170	223	148	147	146	145	144	143		
			100		.24	.11	.04	.01	.01						6.0	8.0	10	13	17	21		
			150	4.2	.27	.12	.04	.01	.01	72	102	131	172	226	149	149	148	147	146	146		
			200		.30	.13	.05	.01	.01						6.9	8.7	11	13	18	22		
			300	4.2	.34	.15	.05	.01	.01	74	104	134	174	230	150	150	149	149	148	147		
			500		.39	.15	.05	.02	.01						7.9	9.6	12	14	19	23		
			750	4.2	.39	.19	.08	.03	.01	76	106	137	178	232	151	151	151	150	150	150		
			1,000		.49	.24	.10	.04	.02						8.9	11	13	15	20	24		
			2,000	5.8	.97	.48	.20	.07	.03	90	122	154	196	248	151	151	151	151	150	150		
		"C"	3,500		1.69	.83	.35	.12	.05						11	14	16	18	23	28		
			5,000	6.9	2.42	1.19	.50	.17	.07	100	134	168	208	262	151	151	151	151	150	150		
			7,500		3.63	1.78	.75	.25	.10						14	16	18	20	25	30		
			10,000	8.2	4.83	2.38	1.00	.34	.14	110	144	180	222	275	151	151	151	151	150	150		
			15,000		7.25	3.56	1.50	.51	.21						17	19	21	23	28	32		
			20,000																			
		"D"	25,000																			
			50,000																			
			75,000																			
			100,000																			
			150,000																			
			200,000																			
			250,000																			

(NOTE) For speeds not shown on the pump hydraulic charts, consult factory.

©2010 The Gorman-Rupp Company

GORMAN-RUPP ROTARY GEAR PUMPS

NP

PUMP HYDRAULIC SIZE CHART

99 GPM
580 RPM

NOMINAL		ROTOR TRIM	VISCOSITY	N.I.P.R.	FRICTION PIPE LOSS (PSI/FT) (Based on Sch 40 Steel Pipe)					FULL BYPASS RELIEF VALVE PRESSURE (PSI)					CAPACITY (GPM) / H.P. REQUIRED							
															DIFFERENTIAL PRESSURE (PSI)							
CAP. GPM	SPEED RPM		(SSU)	(PSIA)	PIPE DIAMETER					CRACKING PRESS. (PSI)					25	50	75	100	150	200	300	400
										LOW PRES R/V			HI PRES R/V		MEDIUM DUTY AND HEAVY DUTY					HEAVY DUTY ONLY		
					2"	$2\frac{1}{2}$"	3"	4"	5"	50	75	100	150	200								
99	580	STD	28	2.5	.01	.01	.01	.01	.01	62	88	118			95	92	91	90				
			32		.06	.03	.01	.01	.01						3.2	4.6	6.2	7.8				
			38	2.5	.08	.03	.01	.01	.01	62	88	118	164		96	94	94	93	92			
			50		.09	.04	.02	.01	.01						3.2	4.7	6.3	7.9	11			
			70	2.5	.11	.05	.02	.01	.01	64	90	120	164	210	98	97	96	96	95	94		
			100		.12	.05	.02	.01	.01						3.3	4.7	6.4	8.0	11	14		
			150	2.5	.14	.06	.02	.01	.01	64	92	120	168	214	99	99	98	98	97	96		
			200		.15	.06	.03	.01	.01						3.5	4.9	6.5	8.1	11	14		
			300	2.5	.17	.06	.03	.01	.01	66	94	122	168	218	100	99	99	99	98	98		
			500		.17	.08	.04	.01	.01						4.0	5.1	6.8	8.2	11	15		
			750	2.5	.24	.12	.05	.02	.01	68	96	122	172	222	101	101	101	100	99	99		
			1,000		.32	.16	.07	.02	.01						4.5	5.9	7.1	8.9	12	15		
			2,000	3.2	.64	.32	.13	.05	.02	74	102	128	180	230	101	101	101	100	100	99		
		"C"	3,500		1.12	.55	.23	.08	.03						5.9	7.3	8.9	10	14	17		
			5,000	3.8	1.60	.79	.33	.11	.05	76	104	130	184	234	101	101	101	100	100	100		
			7,500		2.39	1.18	.50	.17	.07						7.1	9.0	10	12	15	18		
			10,000	4.5	3.19	1.57	.66	.22	.09	78	106	132	188	236	101	101	101	100	100	100		
			15,000		4.79	2.35	.99	.33	.14						8.9	11	13	14	17	20		
			20,000	5.2	6.38	3.14	1.32	.45	.18	80	108	134	192	240	101	101	101	100	100	100		
		"D"	25,000		7.97	3.92	1.64	.56	.23						11	12	14	15	18	21		
			50,000	9.0	16.0	7.83	3.29	1.11	.45	88	120	146	208	250	101	101	101	100	100	100		
			75,000		23.9	11.8	4.93	1.66	.68						17	23	25	27	30	33		
			100,000																			
			150,000																			
			200,000																			
			250,000																			

(NOTE) For speeds not shown on the pump hydraulic charts, consult factory.

©2010 The Gorman-Rupp Company

GORMAN-RUPP
ROTARY GEAR PUMPS

NP

PUMP HYDRAULIC SIZE CHART

60 GPM
350 RPM

NOMINAL		ROTOR TRIM	VISCOSITY	N.I.P.R.	FRICTION PIPE LOSS (PSI/FT) (Based on Sch 40 Steel Pipe)					FULL BYPASS RELIEF VALVE PRESSURE (PSI)					CAPACITY (GPM) / H.P. REQUIRED							
															DIFFERENTIAL PRESSURE (PSI)							
CAP. GPM	SPEED RPM		(SSU)	(PSIA)	PIPE DIAMETER					CRACKING PRESS. (PSI)					25	50	75	100	150	200	300	400
										LOW PRES R/V			HI PRES R/V		MEDIUM DUTY AND HEAVY DUTY					HEAVY DUTY ONLY		
					2"	2 1/2"	3"	4"	5"	50	75	100	150	200								
60	350	STD	28	1.5	.01	.01	.01	.01	.01	57	83	107			55	55	53	52				
			32		.02	.01	.01	.01	.01						1.8	2.7	3.8	4.8				
			38	1.5	.03	.02	.01	.01	.01	57	83	107	157		56	56	55	54	53			
			50		.04	.02	.01	.01	.01						1.9	2.8	3.9	4.9	6.7			
			70	1.5	.05	.02	.01	.01	.01	58	85	109	157	210	58	58	57	57	56	55		
			100		.05	.02	.01	.01	.01						2.0	2.9	3.9	4.9	6.8	8.8		
			150	1.5	.06	.03	.01	.01	.01	58	85	109	157	210	60	60	59	59	58	57		
			200		.06	.03	.01	.01	.01						2.1	3.0	4.0	5.0	6.9	8.9		
			300	1.5	.06	.03	.01	.01	.01	59	87	112	159	212	61	60	60	60	59	59		
			500		.10	.05	.02	.01	.01						2.2	3.1	4.1	5.0	6.9	9.0		
			750	1.5	.15	.07	.03	.01	.01	59	87	112	159	212	61	60	60	60	60	60		
			1,000		.20	.10	.04	.02	.01						2.3	3.3	4.2	5.0	7.0	9.1		
			2,000	2.1	.39	.19	.08	.03	.01	63	90	117	170	219	61	60	60	60	60	60		
		"C"	3,500		68	.33	.14	.05	.02						3.0	4.0	4.9	5.7	7.6	9.6		
			5,000	2.5	.97	.48	.20	.07	.03	64	90	117	170	219	61	60	60	60	60.3	60		
			7,500		1.45	.71	.30	.10	.04						3.6	4.6	5.0	6.3	8.2	10		
			10,000	3.1	1.93	.95	.40	.14	.06	65	92	120	174	225	61	60	60	60	60	60		
			15,000		2.90	1.43	.60	.20	.08						4.4	5.4	6.2	7.0	8.9	11		
			20,000	3.6	3.87	1.90	.80	.27	.11	65	92	120	174	225	61	60	60	60	60	60		
		"D"	25,000		4.83	2.37	1.00	.34	.14						5.1	6.0	7.0	7.9	9.7	12		
			50,000	6.5	9.66	4.75	1.99	.67	.27	70	98	126	179	232	61	60	60	60	60	60		
			75,000		14.5	7.12	2.99	1.01	.41						7.5	8.5	9.5	11	12	14		
			100,000	10.2	19.3	9.49	3.98	1.35	.55	75	104	132	185	238	61	60	60	60	60	60		
			150,000		29.0	14.3	5.97	2.02	.82						10	11	13	15	17	20		
			200,000																			
			250,000																			

(NOTE) For speeds not shown on the pump hydraulic charts, consult factory.

©2010 The Gorman-Rupp Company