GORMAN-RUPP
ROTARY GEAR PUMPS

## GHS SERIES

# HEAVY DUTY STANDARD; D, G, J, N & R HYD SIZE

## ROTARY GEAR PUMP

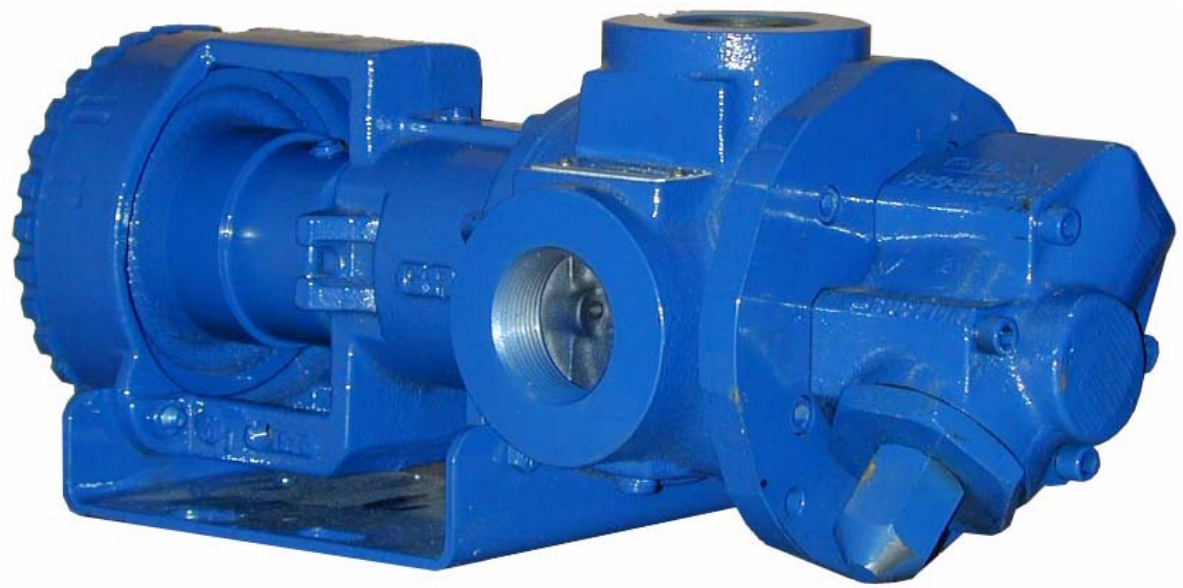

The GHS iron series is designed for applications in the operating ranges noted below. These units are available with head and backhead jackets for temperature control, carbon graphite bushings for low viscosity liquids, silicon carbide bushings for wear resistance, and numerous shaft seal options described on the following pages

This heavy duty series provides superior rotor shaft support and an integral, maintenance-free radial/thrust bearing for reduced deflection and wear.

### FEATURES

*400 PSI CAPABILITY*

*BALL BEARING THRUST CONTROL*

*ROTOR END CLEARANCE EXTERNALLY ADJUSTABLE*

*OPTIMIZED LOAD SUPPORT AND HIGH STRENGTH SHAFT*

*HIGH STRENGTH, COMPUTER PROFILED GEARING FOR QUIET OPERATION*

*FLEXIBLE SEAL DESIGN ALLOWS FOR A VARIETY OF INDUSTRY STANDARD SEALS OR PACKING*

*INTERNAL SEAL VENT*

*DEEP END FEED DESIGN*

### OPERATING RANGE

| | | |
|---|---|---|
| CAPACITY | (GPM) : | (3 TO 295) |
| | [LPM] : | [11 TO 1116] |
| PRESSURE | (PSI) : | [0 TO 300) |
| | [BAR] : | [0 TO 20.7] |
| VISCOSITY | (SSU) : | (28 TO 2,000,000) |
| | [cSt] : | [1 TO 440,000] |
| TEMPERATURE | (F) : | (-60° TO 675°) |
| | [C] : | [-51° TO 358°] |

### APPLICATIONS

USE WITH ANY CLEAN LIQUID COMPATIBLE WITH CAST IRON

- ★ BOOSTER SERVICE
- ★ CIRCULATING
- ★ FILTERING
- ★ LUBRICATING
- ★ TRANSFERRING
- ★ LOW PRESSURE FLUID POWER
- ★ METERING



SUPERSEDES ALL PREVIOUS ISSUES
©2010 The Gorman-Rupp Company

# Standard Construction

| EXTERIOR | ROTOR & IDLER | HOUSING PORTS | BUSHINGS | IDLER PIN | SHAFT | SHAFT SEALING MECH. SEAL ● | SHAFT SEALING PACKING ■ | ROTATION | INTERNAL RELIEF VALVE MATERIAL | INTERNAL RELIEF VALVE SETTING |
|---|---|---|---|---|---|---|---|---|---|---|
| CAST IRON | HIGH STRENGTH IRON | 90° TAPPED<br>125# FLG | BRONZE | HARDENED STEEL | STEEL | VITON | CARBON FIBER | C.W. | DUCTILE IRON | 75 PSI [5 BAR] |

# Standard Models

**G H S 1 DC 3 – B**

GEAR | DUTY | DESIGN | PORT SIZE | HYDRAULIC SIZE | SEAL | STYLE

| MODEL NUMBER | NOM. CAPACITY - SPEED MAXIMUM GPM [LPM] | NOM. CAPACITY - SPEED MAXIMUM RPM 60 Hz [50 HZ] | NOM. CAPACITY - SPEED ALTERNATIVE GPM [LPM] | NOM. CAPACITY - SPEED ALTERNATIVE RPM ② 60 Hz [50 Hz] | MAXIMUM DIFFERENTIAL PRESSURE-PSI [BAR] BELOW 38 SSU [4 cSt] | MAXIMUM DIFFERENTIAL PRESSURE-PSI [BAR] 38 TO 100 SSU [21 cSt] | MAXIMUM DIFFERENTIAL PRESSURE-PSI [BAR] 100 TO 250,000 SSU [55,000 cSt] | MAXIMUM TEMP. °F [°C] | SHIPPING DATA Weight LBS [KG] | SHIPPING DATA Volume CU. FT. |
|---|---|---|---|---|---|---|---|---|---|---|
| **GHS 1DC 3-B** ● ①<br>**GHS 1DC 4-B** ■ | 9 [28] | 1750 [1460] | 6 [19] | 1150 [960] | 100 [7] | 150 [10] | 300 [20.7] | ● 400 [204] | 30 [13,6] | 2.9 |
| **GHS 1DE 3-B** ● ①<br>**GHS 1DE 4-B** ■ | 11 [35] | | 7 [22] | | | | | | 30 [13,6] | 2.9 |
| **GHS 1-1/2 GC 3-B** ●<br>**GHS 1-1/2 GC 4-B** ■ | 16 [50] | | 10 [32] | | | | | | 54 [24,5] | 2.9 |
| GHS 2 GC 3-B ●<br>GHS 2 GC 4-B ■ | | | | | | | | | 54 [24,5] | 2.9 |
| **GHS 1-1/2 GF 3-B** ●<br>**GHS 1-1/2 GF 4-B** ■ | 23 [73] | | 15 [47] | | | | | | 54 [24,5] | 2.9 |
| GHS 2 GF 3-B ●<br>GHS 2 GF 4-B ■ | | | | | | | | | 54 [24,5] | 2.9 |
| **GHS 1-1/2 GH 3-B** ●<br>**GHS 1-1/2 GH 4-B** ■ | 31 [98] | | 20 [63] | | | | | | 54 [24,5] | 2.9 |
| GHS 2 GH 3-B ●<br>GHS 2 GH 4-B ■ | | | | | | | | | 54 [24,5] | 2.9 |
| GHS 1-1/2 GJ 3-B ● ③<br>GHS 1-1/2 GJ 4-B ■ | 38 [120] | | 25 [79] | | | | 200 [14] | ■ 500 [260] | 54 [24,5] | 2.9 |
| **GHS 2 GJ 3-B** ● ③<br>**GHS 2 GJ 4-B** ■ | | | | | | | | | 54 [24,5] | 2.9 |
| **GHS 2 JG 3-B** ●<br>**GHS 2 JG 4-B** ■ | 40 [126] | 1150 [960] | 30 [95] | 870 [725] | | | 300 [20.7] | | 125 [57] | 5.3 |
| GHS 2-1/2 JG 3-B ●<br>GHS 2-1/2 JG 4-B ■ | | | | | | | | | 125 [57] | 5.3 |
| GHS 3 JG 3-B ●<br>GHS 3 JG 4-B ■ | | | | | | | | | 125 [57] | 5.3 |

STANDARD MODELS CONT.

NOTE: RECOMMENDED PORT SIZES ARE SHOWN IN **BOLDFACE**. EXAMPLE: **GHS 2JG 3-B**

● MECHANICAL SEAL
■ LIPSEAL/PACKING

① 3450 [2875] RPM PERMISSIBLE TO 1,000 SSU [220 Cts.] AND 100 PSI [7 BAR]
② MAXIMUM SPEED FOR AMMONIA MODELS.
③ PUMP LIMITED TO 200 PSI MAXIMUM PRESSURE.



SUPERSEDES ALL PREVIOUS ISSUES
©2010 The Gorman-Rupp Company

# Standard Models Cont'd

| MODEL NUMBER | NOM. CAPACITY - SPEED MAXIMUM GPM [LPM] | NOM. CAPACITY - SPEED MAXIMUM RPM 60 Hz [50 HZ] | NOM. CAPACITY - SPEED ALTERNATIVE GPM [LPM] | NOM. CAPACITY - SPEED ALTERNATIVE RPM (1) 60 Hz [50 Hz] | MAXIMUM DIFFERENTIAL PRESSURE-PSI [BAR] BELOW 38 SSU [4 cSt] | MAXIMUM DIFFERENTIAL PRESSURE-PSI [BAR] 38 TO 100 SSU [21 cSt] | MAXIMUM DIFFERENTIAL PRESSURE-PSI [BAR] 100 TO 250,000 SSU [55,000 cSt] | MAXIMUM TEMP. °F [°C] | SHIPPING DATA Weight LBS [KG] | SHIPPING DATA Volume CU. FT. |
|---|---|---|---|---|---|---|---|---|---|---|
| GHS 2 JJ 3-B ● GHS 2 JJ 4-B ■ | 56 [177] | 1150 [960] | 42 [133] | 870 [725] | 100 [7] | 150 [10] | 300 (3) [20.7] | ● 400 [204] | 125 [57] | 5.3 |
| **GHS 2-1/2 JJ 3-B ● GHS 2-1/2 JJ 4-B ■** | | | | | | | | | 125 [57] | 5.3 |
| GHS 3 JJ 3-B ● GHS 3 JJ 4-B ■ | | | | | | | | | 125 [57] | 5.3 |
| GHS 2 JL 3-B ● GHS 2 JL 4-B ■ | 77 [243] | | 58 [183] | | | | | | 125 [57] | 5.3 |
| GHS 2-1/2 JL 3-B ● GHS 2-1/2 JL 4-B ■ | | | | | | | | | 125 [57] | 5.3 |
| **GHS 3 JL 3-B ● GHS 3 JL 4-B ■** | | | | | | | | | 125 [57] | 5.3 |
| GHS 2 JP 3-B ● GHS 2 JP 4-B ■ (2) | 107 [338] | | 81 [256] | | | | 200 [14] | | 125 [57] | 5.3 |
| GHS 2-1/2 JP 3-B ● GHS 2-1/2 JP 4-B ■ (2) | | | | | | | | | 125 [57] | 5.3 |
| **GHS 3 JP 3-B ● GHS 3 JP 4-B ■** (2) | | | | | | | | | 125 [57] | 5.3 |
| GHS 1-1/2 NK 3-B ● GHS 1-1/2 NK 4-B ■ | 99 [375] | 960 [960] | 60 [189] | 580 [480] | | | 300 (3) [20.7] | ■ 500 [260] | 167 [75,7] | 5.3 |
| GHS 2 NK 3-B ● GHS 2 NK 4-B ■ | | | | | | | | | 167 [75,7] | 5.3 |
| GHS 2-1/2 NK 3-B ● GHS 2-1/2 NK 4-B ■ | | | | | | | | | 167 [75,7] | 5.3 |
| **GHS 3 NK 3-B ● GHS 3 NK 4-B ■** | | | | | | | | | 167 [75,7] | 5.3 |
| GHS 2 NM 3-B ● GHS 2 NM 4-B ■ | 132 [500] | | 80 [252] | | | | | | 167 [75,7] | 5.3 |
| GHS 2-1/2 NM 3-B ● GHS 2-1/2 NM 4-B ■ | | | | | | | | | 167 [75,7] | 5.3 |
| **GHS 3 NM 3-B ● GHS 3 NM 4-B ■** | | | | | | | | | 167 [75,7] | 5.3 |
| GHS 2 NP 3-B ● GHS 2 NP 4-B ■ (2) | 165 [624] | | 99 [312] | | | | 200 [14] | | 167 [75,7] | 5.3 |
| GHS 2-1/2 NP 3-B ● GHS 2-1/2 NP 4-B ■ (2) | | | | | | | | | 167 [75,7] | 5.3 |
| **GHS 3 NP 3-B ● GHS 3 NP 4-B ■** (2) | | | | | | | | | 167 [75,7] | 5.3 |

STANDARD MODELS CONT.

NOTE: RECOMMENDED PORT SIZES ARE SHOWN IN **BOLDFACE**. EXAMPLE: **GHS 2JG 3-B**

(1) MAXIMUM SPEED FOR AMMONIA MODELS.

(2) PUMP LIMITED TO 200 PSI MAXIMUM PRESSURE.

(3) FOR 200-300 PSI OPERATION, HOUSING BUSHING IS RECOMMENDED. CONSULT BUSHING LIMITATION TABLE OR CONSULT FACTORY.

● MECHANICAL SEAL
■ LIPSEAL/PACKING



SUPERSEDES ALL PREVIOUS ISSUES
©2010 The Gorman-Rupp Company

# Standard Models Cont'd

| MODEL NUMBER | NOM. CAPACITY - SPEED | | | | MAXIMUM | | | | SHIPPING DATA | |
|---|---|---|---|---|---|---|---|---|---|---|
| | MAXIMUM | | ALTERNATIVE | | DIFFERENTIAL PRESSURE - PSI [BAR] | | | TEMP. | Weight | Volume |
| | GPM [LPM] | RPM 60 Hz [50 HZ] | GPM [LPM] | RPM (1) 60 Hz [50 Hz] | BELOW 38 SSU [4 cSt] | 38 TO 100 SSU [21 cSt] | 100 TO 250,000 SSU [55,000 cSt] | °F [°C] | LBS [KG] | CU. FT. |
| GHS 2 RM 3-B ● <br> GHS 2 RM 4-B ■ | 172 [542] | 720 [600] | 115 [362] | 480 [400] | 100 [7] | 150 [10] | 300 [20.7] | ● 400 [204] <br> ■ 500 [260] | 301 [136] | 10.7 |
| GHS 2-1/2 RM 3-B ● ⊢ <br> GHS 2-1/2 RM 4-B ■ ⊢ | | | | | | | | | 301 [136] | 10.7 |
| **GHS 3 RM 3-B** ● ⊢ <br> **GHS 3 RM 4-B** ■ ⊢ | | | | | | | | | 301 [136] | 10.7 |
| GHS 4 RM 3-B ● ⊢ <br> GHS 4 RM 4-B ■ ⊢ | | | | | | | | | 301 [136] | 10.7 |
| GHS 2-1/2 RP 3-B ● ⊢ <br> GHS 2-1/2 RP 4-B ■ ⊢ | 215 [678] | | 143 [451] | | | | | | 301 [136] | 10.7 |
| **GHS 3 RP 3-B** ● ⊢ <br> **GHS 3 RP 4-B** ■ ⊢ | | | | | | | | | 301 [136] | 10.7 |
| GHS 4 RP 3-B ● ⊢ <br> GHS 4 RP 4-B ■ ⊢ | | | | | | | | | 301 [106] | 10.7 |
| GHS 2-1/2 RR 3-B ● ⊢ <br> GHS 2-1/2 RR 4-B ■ ⊢ | 255 [804] | | 170 [536] | | | | | | 301 [136] | 10.7 |
| GHS 3 RR 3-B ● ⊢ <br> GHS 3 RR 4-B ■ ⊢ | | | | | | | | | 301 [136] | 10.7 |
| **GHS 4 RR 3-B** ● ⊢ <br> **GHS 4 RR 4-B** ■ ⊢ | | | | | | | | | 301 [136] | 10.7 |
| GHS 3 RS 3-B ● ⊢ <br> GHS 3 RS 4-B ■ ⊢ (2) | 295 [930] | | 196 [618] | | | | 200 [14] | | 301 [136] | 10.7 |
| **GHS 4 RS 3-B** ● ⊢ <br> **GHS 4 RS 4-B** ■ ⊢ (2) | | | | | | | | | 301 [136] | 10.7 |

(1) MAXIMUM SPEED FOR AMMONIA MODELS.

(2) PUMP LIMITED TO 200 PSI MAXIMUM PRESSURE

● MECHANICAL SEAL

■ LIPSEAL/PACKING

⊢ PORTS ARE COMPATIBLE WITH 125# ANSI CAST IRON FLANGES. ALL OTHER PORTS ARE TAPPED NPT FOR ANSI PIPE. OPTIONAL [DIN] FLANGES OR TAPPED [BSP] PORTS AVAILABLE FOR EXPORT MARKET.



SUPERSEDES ALL PREVIOUS ISSUES
©2010 The Gorman-Rupp Company

| APPLICATION RECOMMENDATIONS: | | |
|---|---|---|
| **APPLICATION** | **OPTIONS REQUIRED (Select One From Each Row)** | **OPERATING LIMITATIONS** |
| HIGH TEMPERATURE | 25U, 25V, OR 25W<br>35J – 35M (AS REQ'D)<br>40M, 40W<br>61H, OR 65Q<br>70F OR 70K | TEMPERATURE: 675°F MAX.<br>PRESSURE: 200 PSI MAX. |
| AMMONIA | 25G OR 25H<br>40N<br>60K<br>70E<br>90A | PRESSURE: 200 PSI MAX.<br>2/3 RATED SPEED<br>4 FEET NPSHr |
| LP GAS | 25G OR 25H<br>40F OR 40N<br>70D OR 70E | PRESSURE: 200 PSI MAX.<br>3 FEET NPSHr |
| ASPHALT | 25U, 25V OR 25W<br>35J–35M (AS REQ'D)<br>40G, 40M, 40W<br>41R, 41W<br>65S<br>70B, 70K<br>71K | TEMPERATURE: 500°F MAX. |
| JACKETED | 40G, 40J, 40K, 40W, 41U, 41W<br>70B, 70G, 70K<br>71K, 71M | LIMIT JACKET PRESSURE TO 150 PSIG |

NOTE: PROPER PUMP APPLICATION REQUIRES CONSIDERATION OF ADDITIONAL FACTORS. PLEASE REVIEW APPLICATION GUIDE IN SECTION 500 OR CONSULT THE FACTORY.


©2010 The Gorman-Rupp Company

# Basic Dimensions

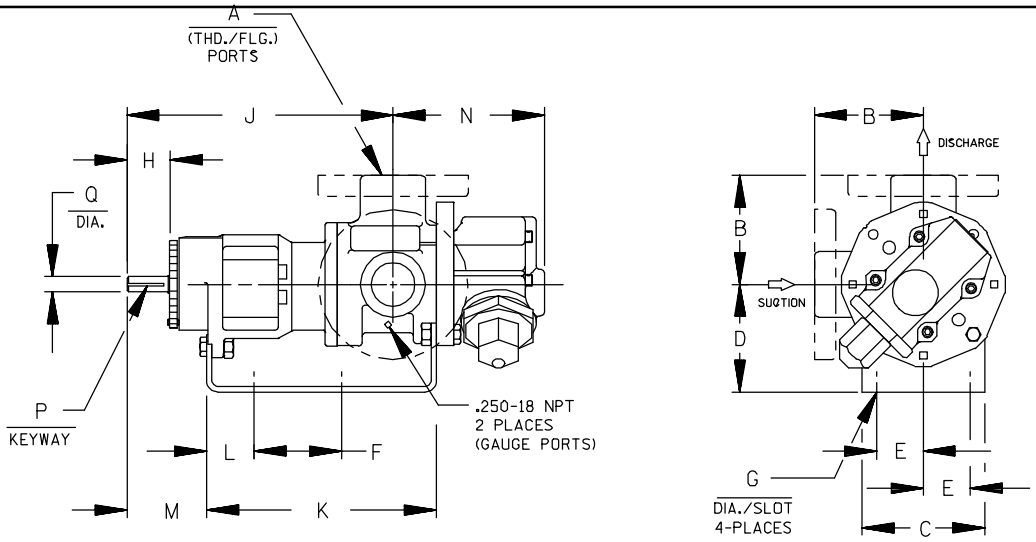


CAD FILE NO.: 16669

| MODEL NUMBERS | PUMP DIMENSIONS - INCHES [MILLIMETERS] | | | | | | | | | | | | | | |
|---|---|---|---|---|---|---|---|---|---|---|---|---|---|---|---|
| | A | B | C | D | E | F | G | H | J | K | L | M | N | P | Q |
| GHS D | 1" | 2.50 [64] ✳<br>2.75 [70] †<br>3.19 [81] ⊢<br>4.00 [102] ⊢ † | 4.00 [102] | 3.50 [89] ✳<br>4.50 [114]<br>5.25 [133] | 1.62 [41] | 5.50 [140] | .41 [10] | 1.16 [30] | 8.43 [214] | 7.54 [192] | 1.09 [28] | 2.29 [58] | 4.98 [127] | .12 [3] × .75 [19] | .50 [13] |
| GHS G<br>GHA G | 1-1/2"<br>2" | 3.50 [89] ✳<br>3.75 [95] †<br>4.00 [102] ⊢ | 4.88 [124] | 3.50 [89] ✳<br>4.50 [114]<br>5.25 [133]<br>6.25 [159] | 1.62 [41] | 8.00 [203] | .41 [10] | 1.62 [41] | 12.06 [306] | 10.72 [272] | 1.52 [39] | 3.35 [85] | 5.70 [145] | .19 [5] × 1.25 [32] | .75 [19] |
| GHS J<br>GHA J | 2"<br>2-1/2"<br>3" | 4.50 [114] ✳<br>5.00 [127] †<br>6.00 [152] ⊢<br>6.31 [160] ⊢ | 6.88 [175] | 5.25 [133] ✳<br>6.25 [159]<br>7.00 [178]<br>8.00 [203] | 2.88 [73] | 10.00 [254] | .44 [11] | 2.50 [64] | 15.68 [398] | 14.31 [363] | 2.77 [70] | 4.48 [114] | 8.50 [216] | .25 [6] × 2.00 [51] | 1.00 [25] |
| GHS N<br>GHA N | 1-1/2"<br>2"<br>2-1/2"<br>3" | 5.12 [130] ✳<br>5.25 [133] ⊢<br>7.19 [183] ⊢ | 8.00 [203] | 4.50 [114]<br>5.25 [133] ✳<br>6.25 [159]<br>7.00 [178]<br>8.00 [203] | 2.88 [73] | 10.00 [254] | .44 [11] | 2.58 [66] | 17.45 [443]<br>16.37 [416] ✳ | 15.14 [385] | 2.69 [68] | 4.56 [116] | 7.59 [193]<br>8.72 [221] ✳ | .25 [6] × 2.00 [51] | 1.12 [32] |
| GHS R<br>GHA R | 2"<br>2-1/2"<br>3"<br>4" | 6.50 [165] ✳<br>7.19 [183] ⊢ | 10.50 [267] | 7.00 [178] | 3.75 [95] | 13.75 [349] | .52 [13] | 2.25 [57] | 17.87 [454] | 17.36 [441] | 1.86 [47] | 4.70 [119] | 11.31 [287] | .38 [10] × 1.88 [48] | 1.44 [37] |

⊢ PORTS ARE COMPATIBLE WITH 125# OR 250# ANSI CAST IRON FLANGES. ALL OTHER PORTS ARE TAPPED NPT FOR ANSI PIPE. OPTIONAL (DIN) FLANGES OR TAPPED (BSP) PORTS AVAILABLE FOR EXPORT MARKET.

✳ STANDARD DIMENSION † 180° HOUSING



SUPERSEDES ALL PREVIOUS ISSUES
©2010 The Gorman-Rupp Company

# GHS & GHA

## DIRECT FLEX DRIVE OPTION DIMENSIONS

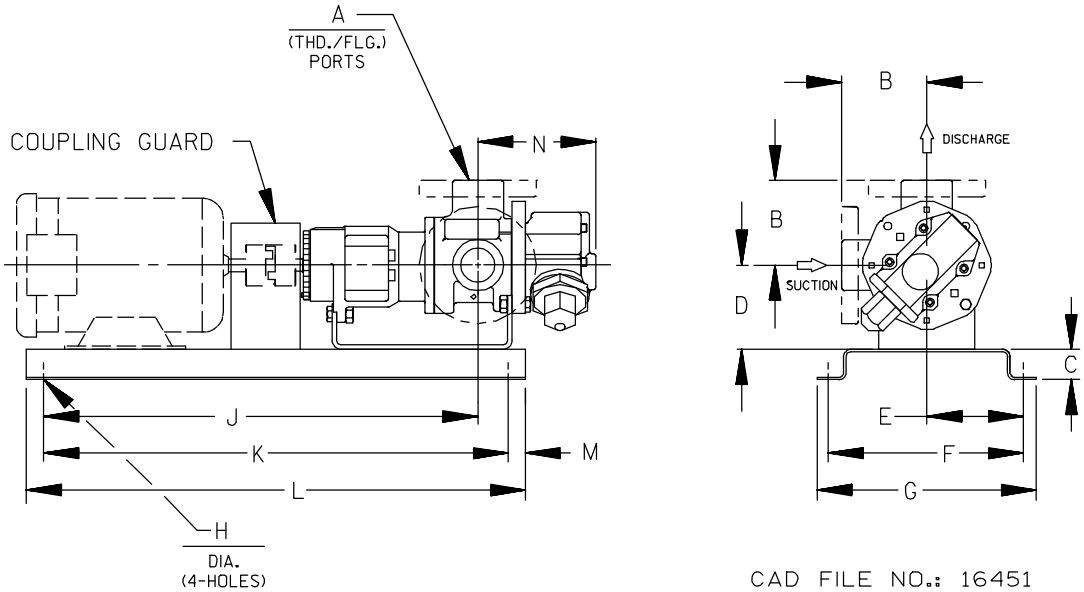


CAD FILE NO.: 16451

| PUMP MODEL | PUMP DIMENSIONS - INCHES[MILLIMETERS] | | | | | | | | | | | | | |
|---|---|---|---|---|---|---|---|---|---|---|---|---|---|---|
| | A | MOTOR FRAME | B | C | D | E | F | G | H | J | K | L | M | N |
| GHS D | 1" | 56/56H | 2.50 [64] ✳ | 2.00 [51] | 3.50 [89] ✳ | 4.44 [113] | 8.88 [226] | 10.14 [258] | .56 [14] | 20.29 [515] | 19.25 [489] | 25.25 [641] | 3.00 [76] | 4.97 [126] |
| | | 143T/145T | 2.75 † [70] | 4.00 [102] | 4.50 [114] | 7.75 [197] | 15.50 [394] | 17.50 [445] | | 26.66 [677] | 23.50 [597] | 33.50 [851] | 5.00 [127] | |
| | | 182T/184T | 3.19 [81] ⊢ | | 5.25 [133] | | | | | | | | | |
| | | 213T/215T | 4.00 † [82] ⊢ | | | | | | | | | | | |
| GHS G<br>GHA G | 1- ½" | 56/56H | 3.50 ✳ [89] | 2.00 [51] | 3.50 [89] ✳ | 4.44 [113] | 8.88 [226] | 10.14 [258] | .56 [14] | 19.93 [506] | 19.25 [489] | 25.25 [641] | 3.00 [76] | 5.70 [145] |
| | | 143T/145T | 3.75 † [95] | 4.00 [102] | 4.50 [114] | 7.75 [197] | 15.50 [394] | 17.50 [445] | | 26.30 [668] | 23.50 [597] | 33.50 [851] | 5.00 [127] | |
| | | 182T/184T | | | 5.25 [133] | | | | | | | | | |
| | 2" | 213T/215T | | | 6.25 [159] | | | | | | | | | |
| | | 254T/256T | 4.00 ⊢ [102] | | | | | | | | | | | |
| GHS J<br>GHA J | 2" | 182T/184T | 4.50 ✳ [114] | 4.00 [102] | 4.50 [114] | 9.50 [241] | 19.00 [483] | 21.00 [533] | .69 [18] | 36.28 [922] | 35.50 [902] | 45.50 [1156] | 5.00 [127] | 8.49 [216] |
| | | 213T/215T | 5.00 † [127] | | 5.25 [133] ✳ | | | | | | | | | |
| | 2- ½" | 254T/256T | | | 6.25 [159] | | | | | | | | | |
| | | 284T/286T | 6.00 † [152] ⊢ | | 7.00 [178] | | | | | | | | | |
| | 3" | 324T/326T | 6.31 [160] ⊢ | | 8.00 [203] | | | | | | | | | |
| GHS N<br>GHA N | 1- ½" | 182T/184T | 5.12 ✳ [130] | 4.00 [102] | 4.50 [114] | 9.50 [241] | 19.00 [483] | 21.00 [533] | .89 [18] | 36.87 [936] | 35.50 [902] | 45.50 [1156] | 5.00 [127] | 8.70 [221] |
| | 2" | 213T/215T | | | 5.25 [133] ✳ | | | | | | | | | |
| | | 254T/256T | 5.25 [133] ⊢ | | 6.25 [159] | | | | | | | | | |
| | 2- ½" | 284T/286T | 7.19 ⊢ [183] | | 7.00 [178] | | | | | 37.98 [965] | | | | 7.59 [193] |
| | 3" | 324T/326T | | | 8.00 [203] | | | | | | | | | |

✳ STANDARD DIMENSION

⊢ PORTS ARE COMPATIBLE WITH 125# OR 250# ANSI CAST IRON FLANGES. ALL OTHER PORTS ARE TAPPED NPT FOR ANSI PIPE. OPTIONAL (DIN) FLANGES OR TAPPED (BSP) PORTS AVAILABLE FOR EXPORT MARKET.

† 180° HOUSING

©2010 The Gorman-Rupp Company

# GHS & GHA

## DIRECT FLEX DRIVE OPTIONS

(Drive Assembly Number Includes Base, Coupling & Guard, But **NOT** the Motor)

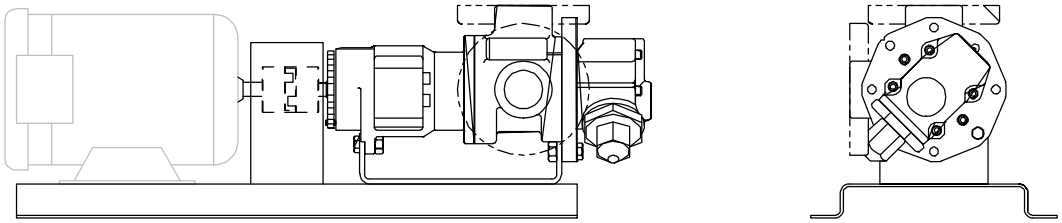

| PUMP MODEL NUMBER | RPM | FRAME | MTG. FT. OPTION REQ. | DRIVE ASSY NO. |
|---|---|---|---|---|
| GHS GHA D | 3450 1750 1150 850 | 56/56H | STD | 90451—086 |
| | | 143T/145T | STD | 90451—018 |
| | | 182T/184T | 80F | 90451—058 |
| | | 213T/215T | 80J | 90451—062 |
| GHS GHA G | 1750 1150 850 | 56/56H | STD | 90451—160 |
| | | 143T/145T | STD | 90451—162 |
| | | 182T/184T | 80F | 90451—168 |
| | | 213T/215T | 80J | 90451—176 |
| | | 254T | 80P | 90451—180 |
| GHS GHA J | 1150 850 | 182T/184T | 80F | 90451—260 |
| | | 213T/215T | STD | 90451—264 |
| | | 254T/256T | 80P | 90451—272 |
| | | 284T/286T | 80S | 90451—280 |
| | | 324T/326T | 80V | 90451—288 |
| GHS GHA N | 850 | 254T/256T | 80P | 90451—390 |
| | | 284T/286T | 80S | 90451—398 |
| | | 324T/326T | 80V | 90451—406 |

**NOTE: CONSULT FACTORY FOR;**
1. **HORSEPOWERS & FRAMES NOT SHOWN**
2. **DRIP PAN BASES**

©2010 The Gorman-Rupp Company

# GHS & GHA

## GRR REDUCER C-FLANGE FLEX DRIVE OPTION DIMENSIONS (56C – 215TC Frame Size Range)

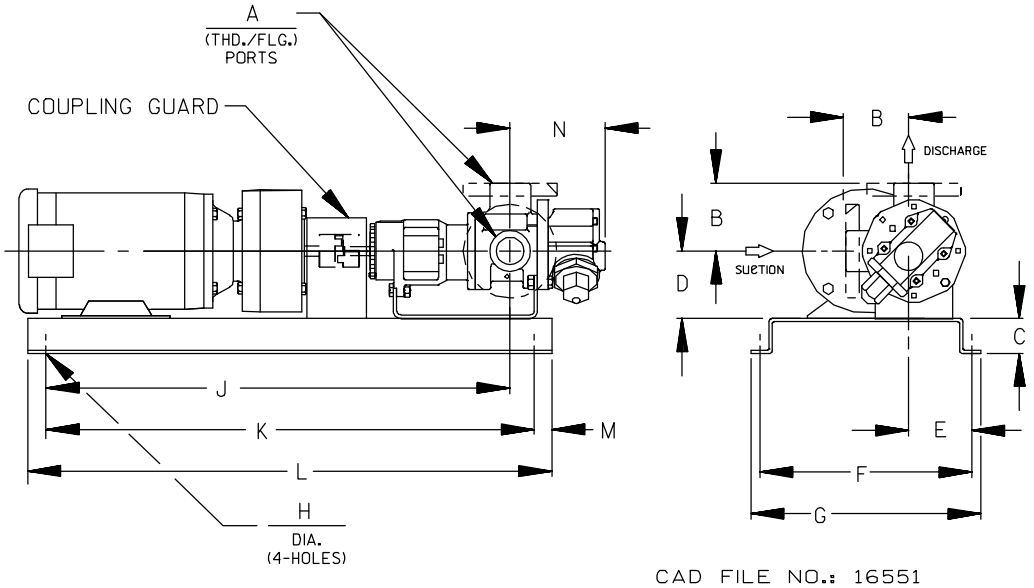


CAD FILE NO.: 16551

| PUMP MODEL | PUMP DIMENSIONS - INCHES[MILLIMETERS] | | | | | | | | | | | | | |
|---|---|---|---|---|---|---|---|---|---|---|---|---|---|---|
| | A | MOTOR FRAME | B | C | D | E | F | G | H | J | K | L | M | N |
| GHS D | 1" | 56C | 2.50 [64] ✳ | 2.00 [51] | 3.50 [89] ✳ | 4.41 [112] | 13.00 [330] | 15.00 [381] | .56 [14] | 26.58 [675] | 25.50 [648] | 31.50 [800] | 3.00 [76] | 4.98 [126] |
| | | 143TC/145TC | 2.75 † [70] | | | | | | | | | | | |
| | | 184C | 3.19 [81] ⊢ | | | | | | | | | | | |
| | | 182TC/184TC | 4.00† [82] ⊢ | | 4.50 [114] | 5.50 [140] | 14.62 [372] | 16.62 [422] | | 37.08 [942] | 37.25 [946] | 43.25 [1098] | | |
| GHS G<br>GHA G | 1- ½" | 56C | 3.50 ✳ [89] | 2.00 [51] | 3.50 [89] ✳ | 4.41 [112] | 13.00 [330] | 15.00 [381] | .56 [14] | 26.22 [667] | 25.50 [648] | 31.50 [800] | 3.00 [76] | 5.72 [145] |
| | | 143TC/145TC | | | | | | | | | | | | |
| | | 184C | 3.75 † [95] | | 4.50 [114] | | | | | | | | | |
| | | 182TC/184TC | 4.00 [102] ⊢ | | | 5.50 [140] | 14.62 [372] | 16.62 [422] | | 36.72 [934] | 37.25 [946] | 43.25 [1098] | | |
| | 2" | 213TC/215TC | | | 5.25 [133] | | | | | | | | | |
| GHS J<br>GHA J | 2" | 182TC/184TC | 4.50 ✳ [114] | 2.00 [51] | 4.50 [114] | 5.50 [140] | 14.62 [372] | 16.62 [422] | .56 [14] | 35.96 [913] | 37.25 [946] | 43.25 [1098] | 3.00 [76] | 8.50 [216] |
| | | | 5.00 † [127] | | | | | | | | | | | |
| | 2- ½" | 213TC/215TC | 6.00† [152] ⊢ | | 5.25 [133] ✳ | | | | | | | | | |
| | 3" | | 6.31 [160] ⊢ | | | | | | | | | | | |
| GHS N<br>GHA N | 1- ½" | 182TC/184TC | 5.12 ✳ [130] | 2.00 [51] | 4.50 [114] | 5.50 [140] | 14.62 [372] | 16.62 [422] | .56 [14] | 36.66 [931] | 37.25 [946] | 43.25 [1098] | 3.00 [76] | 8.71 [221] |
| | 2" | | | | | | | | | | | | | |
| | 2- ½" | 213TC/215TC | 5.25 [133] ⊢ | | 5.25 [133] ✳ | | | | | 36.97 [939] | | | | |
| | 3" | | 7.19 [183] ⊢ | | | | | | | | | | | |

✳ STANDARD DIMENSION

⊢ PORTS ARE COMPATIBLE WITH 125# OR 250# ANSI CAST IRON FLANGES. ALL OTHER PORTS ARE TAPPED NPT FOR ANSI PIPE. OPTIONAL (DIN) FLANGES OR TAPPED (BSP) PORTS AVAILABLE FOR EXPORT MARKET.

† 180° HOUSING

©2010 The Gorman-Rupp Company

# GHS & GHA

## GRR REDUCER C-FLANGE FLEX DRIVE OPTION DIMENSIONS (213TC – 326TC Frame Size Range)

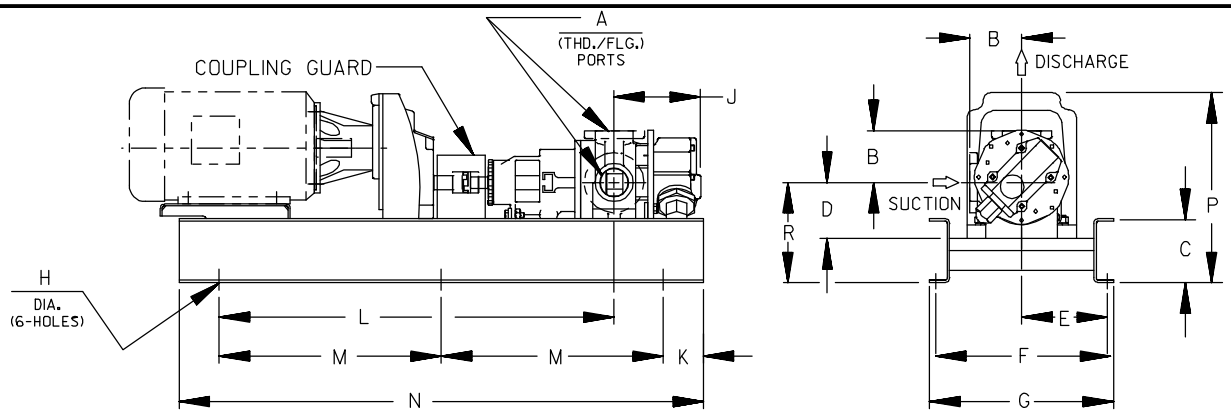


CAD FILE NO.: 16640

| PUMP MODEL | MOUNTING DIMENSIONS | | | | | | | | | | | | | | | |
|---|---|---|---|---|---|---|---|---|---|---|---|---|---|---|---|---|
| | A | MOTOR FRAME | B | C | D | E | F | G | H | J | K | L | M | N | P | R |
| GHS J | 2" | 213TC/215TC | 4.50 [114] ✳ | 6.00 [152] | 6.25 [159] | 10.12 [257] | 20.25 [514] | 22.50 [572] | .69 [18] | 7.59 [193] ✳ | 5.00 [127] | 41.58 [1056] | 23.00 [584] | 56.00 [1422] | 18.14 [461] | 10.58 [269] |
| | | 254TC/256TC | 5.00 [127] † | | | | | | | | | | | | | |
| GHA J | 2 1/2" | 254TC/256TC | 6.00 [152] ⊢ † | | | | | | | 8.70 [221] | | 47.00 [1194] | 25.75 [654] | 61.50 [1562] | 20.91 [531] | 10.66 [271] |
| | 3" | 284TC/286TC | 6.31 [160] ⊢ | | | | | | | | | | | | | |
| GHS N | 1 1/2" | 213TC/215TC | 5.12 [130] ✳ | 6.00 [152] | 6.25 [159] | 10.12 [257] | 20.25 [514] | 22.50 [572] | .69 [18] | 7.59 [193] ✳ | 5.00 [127] | 41.32 [1051] | 23.00 [584] | 56.00 [1422] | 15.75 [400] | 18.14 [461] |
| | 2" | 254TC/256TC | 5.25 [130] ⊢ | | | | | | | | | | | | | |
| GHA N | 2 1/2" | 254TC/256TC | 7.19 [183] ⊢ | | | | | | | 8.70 [221] | | 47.69 [1211] | 25.75 [654] | 61.50 [1562] | | 20.91 [531] |
| | 3" | 284TC/286TC | | | | | | | | | | | | | | |
| GHS R | 2" | 182TC/184TC<br>213TC/215TC | 6.50 [165] | 8.00 [203] | 7.00 [178] | 10.38 [264] | 20.75 [527] | 23.00 [584] | .69 [18] | 11.31 [287] | 5.00 [127] | 38.95 [989] | 22.62 [575] | 55.25 [11403] | 19.86 [504] | 12.66 [322] |
| | 2 1/2" | 213TC/215TC<br>254TC/256TC | 7.19 [183] ⊢ | | | | | | | | | 44.25 [1124] | 25.28 [642] | 60.56 [1538] | 20.26 [515] | 12.39 [315] |
| | | 254TC/256TC<br>284TC/286TC | | | | | | | | | | 49.20 [1250] | 27.75 [705] | 65.50 [1664] | 23.58 [585] | 12.50 [318] |
| GHA R | 3" | 284TC/286TC | 6.50 [165] | 7.00 [178] | 7.00 [178] | 11.38 [289] | 22.75 [578] | 25.00 [635] | .69 [18] | 11.31 [287] | 5.00 [127] | 53.01 [1346] | 29.75 [756] | 69.50 [1756] | 25.94 [659] | 12.50 [318] |
| | 4" | 324TC/326TC | 7.19 [183] ⊢ | 7.00 [178] | 7.00 [178] | 10.38 [264] | 22.75 [578] | 25.00 [635] | | | | 57.95 [1472] | 32.12 [816] | 74.25 [1886] | 26.44 [667] | 13.50 [343] |
| | | 284TC/286TC | | | | | | | | | | | | 74.25 [1886] | 26.44 [667] | 13.50 [343] |

STANDARD DIMENSION

⊢ PORTS ARE COMPATIBLE WITH 125# OR 250# ANSI CAST IRON FLANGES. ALL OTHER PORTS ARE TAPPED NPT FOR ANSI PIPE. OPTIONAL (DIN) FLANGES OR TAPPED (BSP) PORTS AVAILABLE FOR EXPORT MARKET.

† 180° HOUSING

©2010 The Gorman-Rupp Company

# GHS & GHA

## GRR REDUCER C-FLANGE FLEX DRIVE OPTIONS

(Drive Assy Number Includes Base, Coupling, Guard & Gear Reducer, But **NOT** the Motor)

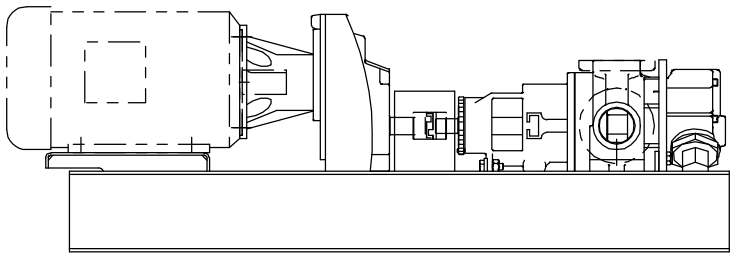

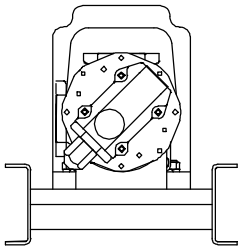

| PUMP MODEL NUMBER | PUMP RPM @1750 | PUMP RPM @1150 | REDUCER ① RATIO | REDUCER ① MAX.HP | FRAME | MTG. FT. OPTION | DRIVE ASSY NO. |
|---|---|---|---|---|---|---|---|
| GHS GHA D | 875 | 575 | 2.00:1 | 5.65 | 56C | STD | 90453–510 |
| | | | | 11.70 | 143TC/145TC | STD | 90453–516 |
| | | | | 11.70 | 182C/184C | 80F | 90453–519 |
| | | | | 13.01 | 182TC/184TC | 80F | 90453–526 |
| | 580 | 383 | 3.00:1 | 3.76 | 56C | STD | 90453–530 |
| | | | | 8.10 | 143TC/145TC | STD | 90453–533 |
| | | | | 8.10 | 182C/184C | 80F | 90453–539 |
| | | | | 10.62 | 182TC/184TC | 80F | 90453–546 |
| | 440 | 288 | 4.00:1 | 2.82 | 56C | STD | 90453–550 |
| | | | | 5.90 | 143TC/145TC | STD | 90453–553 |
| | | | | 5.90 | 182C/184C | 80F | 90453–562 |
| | | | | 7.24 | 182TC/184TC | 80F | 90453–566 |
| | 350 | 230 | 5.00:1 | 2.26 | 56C | STD | 90453–570 |
| | | | | 5.20 | 143TC145TC | STD | 90453–573 |
| | | | | 5.20 | 182C/184C | 80F | 90453–582 |
| | | | | 5.98 | 182TC/184TC | 80F | 90453–586 |
| GHS GHA G | 875 | 575 | 2.00:1 | 5.65 | 56C | STD | 90453–610 |
| | | | | 11.70 | 143TC/145TC | STD | 90453–613 |
| | | | | 11.70 | 182C/184C | 80F | 90453–622 |
| | | | | 13.01 | 182TC/184TC | 80F | 90453–626 |
| | 580 | 383 | 3.00:1 | 3.76 | 56C | STD | 90453–630 |
| | | | | 8.10 | 143TC/145TC | STD | 90453–633 |
| | | | | 8.10 | 182C/184C | 80F | 90453–642 |
| | | | | 10.62 | 182TC/184TC | 80F | 90453–646 |
| | | | | 10.62 | 213TC/215TC | 80J | 90453–648 |
| | 440 | 288 | 4.00:1 | 2.82 | 56C | STD | 90453–660 |
| | | | | 5.90 | 143TC/145TC | STD | 90453–663 |
| | | | | 5.90 | 182C/184C | 80F | 90453–672 |
| | | | | 7.24 | 182TC/184TC | 80F | 90453–676 |
| | | | | 7.24 | 213TC | 80J | 90453–677 |
| | 350 | 230 | 5.00:1 | 2.26 | 56C | STD | 90453–690 |
| | | | | 5.20 | 143TC/145TC | STD | 90453–693 |
| | | | | 5.20 | 182C/184C | 80F | 90453–702 |
| | | | | 5.98 | 182TC/184TC | 80F | 90453–706 |
| | | | | 5.98 | 213TC | 80J | 90453–708 |

(CONT'D)

① Listed reducer horsepower rated for Standard Service (8–10 hrs/day). For Light Service (3–5 hrs/day) multiply maximum rated horsepower by 1.1. For Heavy Service (16–24 hrs/day) multiply maximum rated horsepower by 0.9.

② Based on 1750 RPM input.

NOTE: CONSULT FACTORY FOR;
1. HORSEPOWERS & FRAMES NOT SHOWN
2. DRIP PAN BASES

©2010 The Gorman-Rupp Company

# GHS & GHA

## GRR REDUCER C-FLANGE FLEX DRIVE OPTIONS

(Drive Assy Number Includes Base, Coupling, Guard & Gear Reducer, But **NOT** the Motor)

| PUMP MODEL NUMBER | PUMP RPM @1750 | PUMP RPM @1150 | REDUCER (1) RATIO | REDUCER (1) MAX.HP | FRAME | MTG. FT. OPTION | DRIVE ASSY NO. |
|---|---|---|---|---|---|---|---|
| GHS GHA J | 875 | 575 | 2.00:1 | 13.01 | 182TC/184TC | 80F | 90453–722 |
| | | | | 13.01 | 213TC/215TC | STD | 90453–726 |
| | | | | 36.29 | 254TC/256TC | 80P | 90453–728 |
| | | | | 36.29 | 284TC/286TC | 80P | 90453–732 |
| | 580 | 383 | 3.00:1 | 10.62 | 182TC/184TC | 80F | 90453–737 |
| | | | | 10.62 | 213TC/215TC | 80J | 90453–741 |
| | 555 | 365 | 3.15:1 | 25.76 | 254TC/256TC | 80P | 90453–743 |
| | | | | 42.96 | 284TC/286TC | 80P | 90453–746 |
| | 440 | 288 | 4.00:1 | 7.24 | 182TC/184TC | 80F | 90453–752 |
| | | | | 7.24 | 213TC | 80J | 90453–754 |
| | 350 | 230 | 5.00:1 | 5.98 | 182TC/184TC | 80F | 90453–769 |
| | | | | 5.98 | 213TC | STD | 90453–769 |
| | | | | 16.01 | 215TC | 80P | 90453–774 |
| | | | | 30.49 | 254TC/256TC | 80J | 90453–778 |
| | 278 | 183 | 6.30:1 | 5.94 | 182TC/184TC | | 90453–850 |
| | | | | 13.36 | 213TC/215TC | 80F | 90453–852 |
| | | | | 23.43 | 254TC/256TC | | 90453–853 |
| | 219 | 144 | 8.00:1 | 9.47 | 182TC/184TC | 80F | 90453–856 |
| | | | | 18.48 | 213TC/215TC | 80F | 90453–857 |
| | | | | 18.48 | 254TC/256TC | | 90453–858 |
| GHS GHA N | 875 | 575 | 2.00:1 | 13.01 | 184TC | 80F | 90453–795 |
| | | | | 13.01 | 213TC/215TC | STD | 90453–799 |
| | | | | 36.29 | 254TC/256TC | 80P | 90453–801 |
| | | | | 36.29 | 284TC/286TC | 80P | 90453–805 |
| | 580 | 383 | 3.00:1 | 8.10 | 143T/145T | STD | 90453–806 |
| | | | | 10.62 | 182TC/184TC | 80F | 90453–810 |
| | | | | 10.62 | 213TC/215TC | STD | 90453–812 |
| | 555 | 365 | 3.15:1 | 25.76 | 254TC/256TC | 80P | 90453–817 |
| | | | | 42.96 | 284TC/286TC | 80P | 90453–821 |
| | 440 | 288 | 4.00:1 | 7.24 | 184TC | 80F | 90453–825 |
| | | | | 7.24 | 213TC | STD | 90453–827 |
| | 350 | 230 | 5.00:1 | 5.98 | 182TC/184TC | 80F | 90453–840 |
| | | | | 5.98 | 213TC | STD | 90453–842 |
| | | | | 16.01 | 215TC | STD | 90453–845 |
| | | | | 30.49 | 254TC/256TC | STD | 90453–847 |
| | 278 | 183 | 6.30:1 | 5.94 | 182TC/184TC | | 90453–950 |
| | | | | 13.36 | 213TC/215TC | 80F | 90453–952 |
| | | | | 23.43 | 254TC/256TC | | 90453–953 |
| | 219 | 144 | 8.00:1 | 9.47 | 182TC/184TC | 80F | 90453–956 |
| | | | | 18.48 | 213TC/215TC | 80F | 90453–957 |
| | | | | 18.48 | 254TC/256TC | | 90453–958 |

(CONT'D)

(1) **Listed reducer horsepower rated for Standard Service (8–10 hrs/day). For Light Service (3–5 hrs/day) multiply maximum rated horsepower by 1.1. For Heavy Service (16–24 hrs/day) multiply maximum rated horsepower by 0.9.**

(2) **Based on 1750 RPM input.**

**NOTE: CONSULT FACTORY FOR;**
1. **HORSEPOWERS & FRAMES NOT SHOWN**
2. **DRIP PAN BASES**

©2010 The Gorman-Rupp Company

# GHS & GHA

## GRR REDUCER C-FLANGE FLEX DRIVE OPTIONS

(Drive Assy Number Includes Base, Coupling, Guard & Gear Reducer, But **NOT** the Motor)

| PUMP MODEL NUMBER | PUMP RPM @1750 | PUMP RPM @1150 | REDUCER ① RATIO | REDUCER ① MAX.HP | FRAME | MTG. FT. OPTION | DRIVE ASSY NO. |
|---|---|---|---|---|---|---|---|
| GHS GHA R | 700 | 460 | 2.50:1 | 13.96 | 213TC/215TC | STD | 90453–861 |
| | | | | 30.62 | 254TC/256TC | STD | 90453–864 |
| | | | | 30.62 | 284TC/286TC | STD | 90453–869 |
| | 634 | 417 | 2.76:1 | 46.17 | 324TC/326TC | STD | 90453–874 |
| | | | | 75.00 | 364TC | STD | 90453–878 |
| | 555 | 365 | 3.15:1 | 10.10 | 213TC/215TC | STD | 90453–884 |
| | | | | 25.76 | 254TC/256TC | STD | 90453–886 |
| | | | | 42.96 | 284TC/286TC | STD | 90453–893 |
| | 530 | 348 | 3.38:1 | 66.20 | 324TC/326TC | STD | 90453–898 |
| | 438 | 288 | 4.00:1 | 9.42 | 184TC | STD | 90453–901 |
| | | | | 20.00 | 213TC/215TC | STD | 90453–904 |
| | | | | 38.16 | 254TC/256TC | STD | 90453–911 |
| | | | | 38.16 | 284TC/286TC | STD | 90453–916 |
| | 420 | 278 | 4.13:1 | 54.4 | 324TC/326TC | STD | 90453–918 |
| | 350 | 230 | 5.00:1 | 6.10 | 184TC | STD | 90453–921 |
| | | | | 16.01 | 213TC/215TC | STD | 90453–926 |
| | | | | 30.49 | 254TC/256TC | STD | 90453–929 |
| | | | | 30.49 | 284TC/286TC | STD | 90453–933 |
| | 278 | 184 | 6.30:1 | 5.94 | 184TC | STD | 90453–940 |
| | | | | 13.36 | 213TC/215TC | STD | 90453–941 |
| | | | | 23.43 | 254TC/256TC | STD | 90453–942 |
| | 219 | 145 | 8.00:1 | 9.47 | 184TC | STD | 90453–944 |
| | | | | 18.48 | 213TC/215TC | STD | 90453–946 |
| | | | | 18.48 | 254TC | STD | 90453–947 |

① Listed reducer horsepower rated for Standard Service (8–10 hrs/day). For Light Service (3–5 hrs/day) multiply maximum rated horsepower by 1.1. For Heavy Service (16–24 hrs/day) multiply maximum rated horsepower by 0.9.

② Based on 1750 RPM input.

NOTE: CONSULT FACTORY FOR;
1. HORSEPOWERS & FRAMES NOT SHOWN
2. DRIP PAN BASES

©2010 The Gorman-Rupp Company

GORMAN-RUPP
ROTARY GEAR PUMPS

# PERFORMANCE CURVES

## SPEED VS. CAPACITY/HORSEPOWER

# GF Hydraulic Size

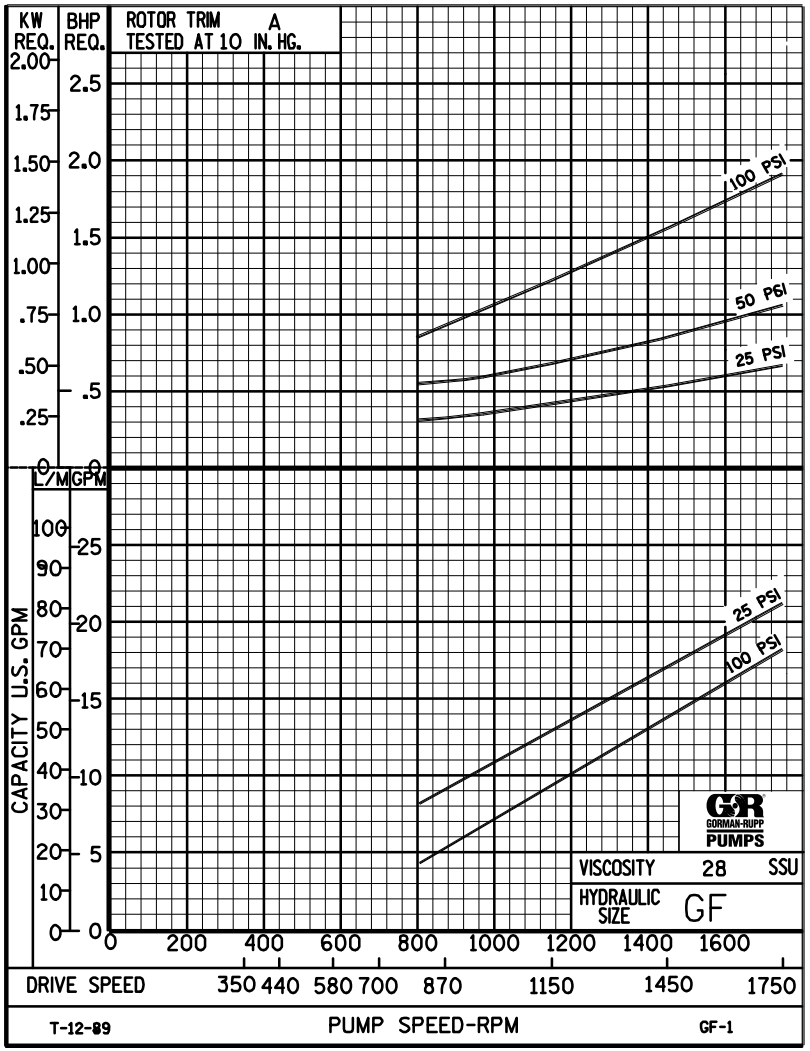


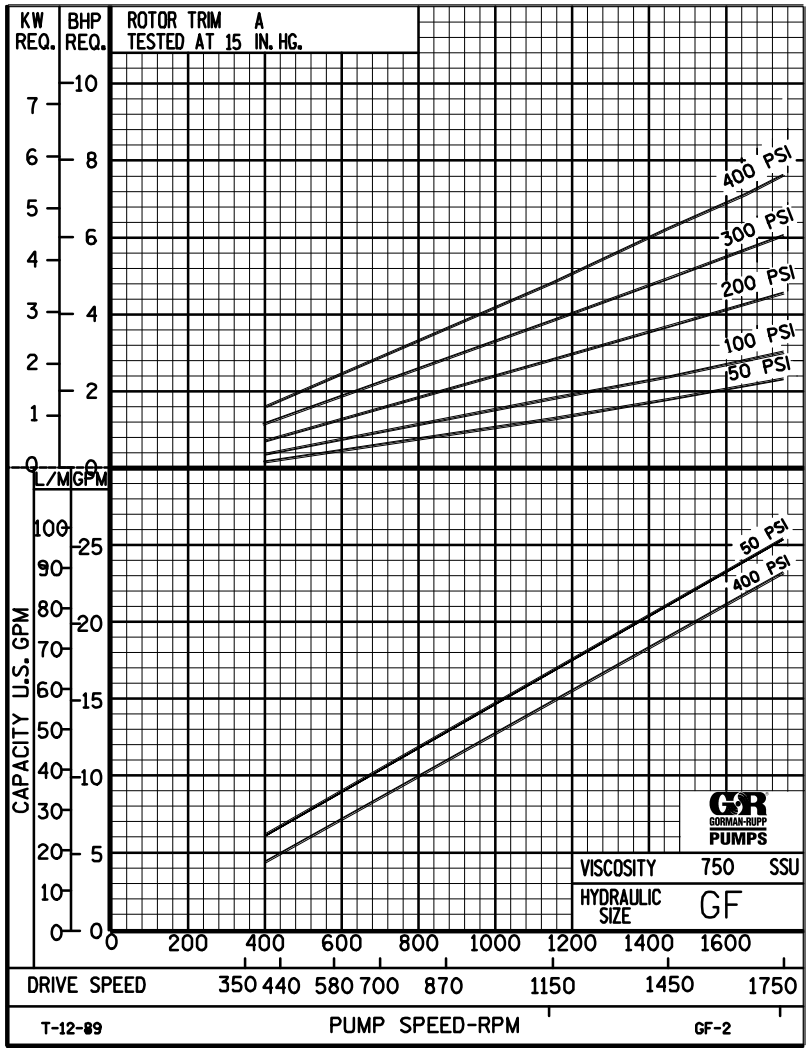




©2010 The Gorman-Rupp Company

GORMAN-RUPP
ROTARY GEAR PUMPS

# PERFORMANCE CURVES

## SPEED VS. CAPACITY/HORSEPOWER

# GF Hydraulic Size

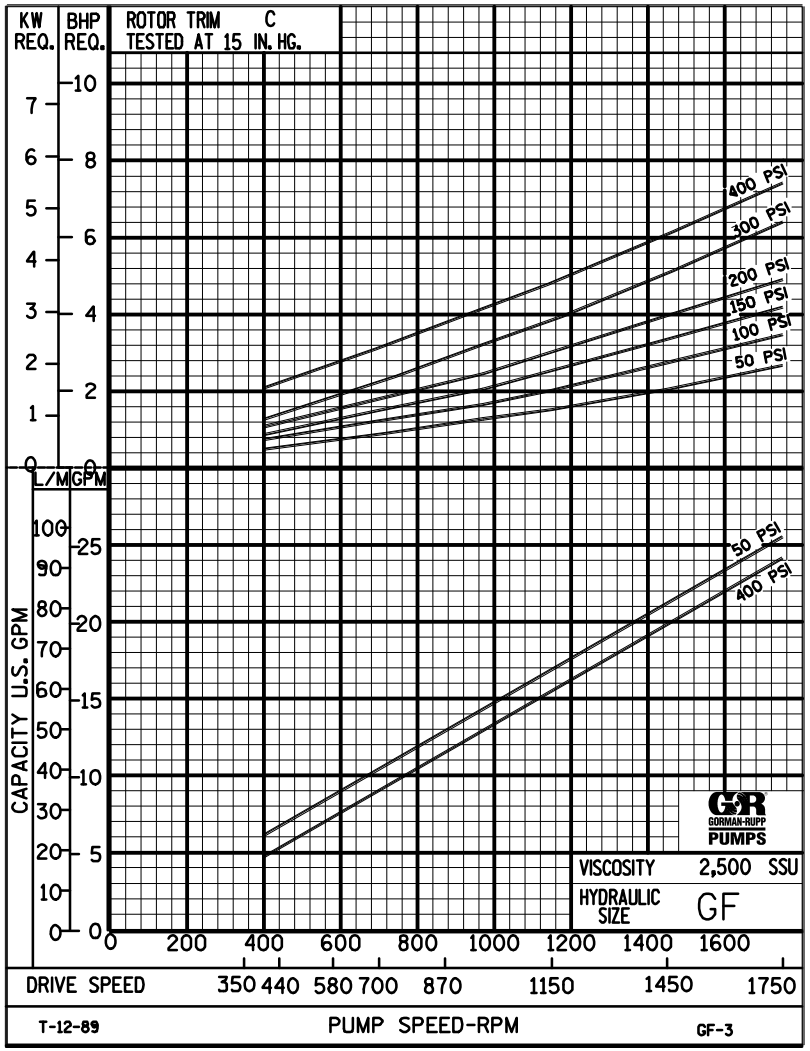


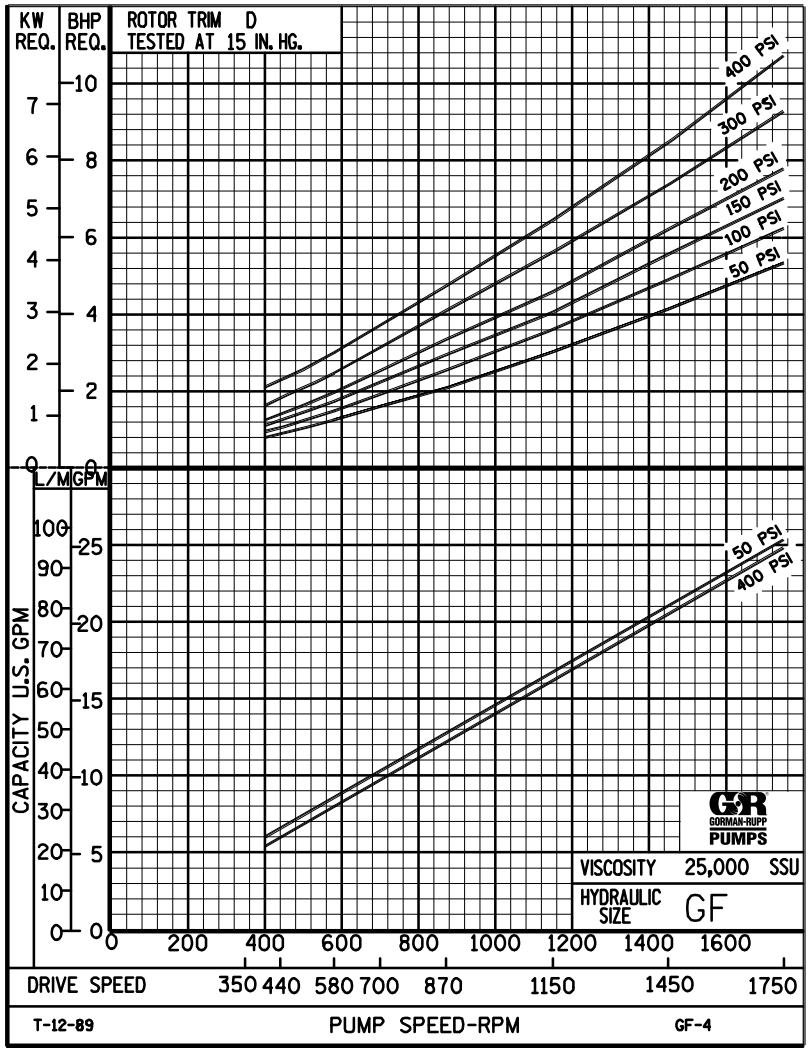




©2010 The Gorman-Rupp Company

GORMAN-RUPP
ROTARY GEAR PUMPS

# GF

## PUMP HYDRAULIC SIZE CHART

23 GPM
1750 RPM

| NOMINAL CAP. GPM | NOMINAL SPEED RPM | ROTOR TRIM | VISCOSITY (SSU) | N.I.P.R. (PSIA) | FRICTION PIPE LOSS (PSI/FT) (Based on Sch 40 Steel Pipe) PIPE DIAMETER ¾" | 1" | 1¼" | 1½" | 2" | FULL BYPASS RELIEF VALVE PRESSURE (PSI) CRACKING PRESS. (PSI) LOW PRES R/V 50 | 75 | 100 | HI PRES R/V 150 | 200 | CAPACITY (GPM) / H.P. REQUIRED DIFFERENTIAL PRESSURE (PSI) 25 | 50 | 75 | 100 | 150 | 200 | 300 | 400 |
|---|---|---|---|---|---|---|---|---|---|---|---|---|---|---|---|---|---|---|---|---|---|---|
| | | | | | | | | | | | | | | | MEDIUM DUTY AND HEAVY DUTY | | | | | HEAVY DUTY ONLY | | |
| 23 | 1750 | STD | 28 | 3.9 | .01 | .01 | .01 | .01 | .01 | 63 | 89 | 117 | | | 21 | 20 | 19 | 18 | | | | |
| | | | 32 | | .36 | .12 | .03 | .02 | .01 | | | | | | .69 | 1.1 | 1.5 | 1.9 | | | | |
| | | | 38 | 3.9 | .46 | .15 | .04 | .02 | .01 | 63 | 89 | 117 | 167 | | 22 | 21 | 21 | 19 | 18 | | | |
| | | | 50 | | .56 | .18 | .05 | .03 | .01 | | | | | | .92 | 1.1 | 1.7 | 2.1 | 2.9 | | | |
| | | | 70 | 3.9 | .63 | .20 | .06 | .03 | .01 | 64 | 90 | 119 | 167 | 230 | 23 | 23 | 22 | 21 | 20 | 20 | | |
| | | | 100 | | .74 | .24 | .07 | .03 | .01 | | | | | | 1.1 | 1.4 | 1.8 | 2.2 | 3.1 | 3.8 | | |
| | | | 150 | 3.9 | .83 | .27 | .08 | .04 | .01 | 64 | 90 | 119 | 167 | 230 | 24 | 24 | 23 | 22 | 22 | 22 | 21 | 19 |
| | | | 200 | | .87 | .31 | .10 | .05 | .02 | | | | | | 1.4 | 1.6 | 2.1 | 2.4 | 3.2 | 3.9 | 5.3 | 6.6 |
| | | | 300 | 3.9 | .90 | .34 | .12 | .06 | .03 | 65 | 91 | 123 | 167 | 230 | 25 | 24 | 24 | 23 | 23 | 23 | 22 | 21 |
| | | | 500 | | 1.47 | .56 | .19 | .10 | .04 | | | | | | 1.6 | 1.9 | 2.4 | 2.7 | 3.4 | 4.2 | 5.6 | 6.9 |
| | | | 750 | 3.9 | 2.20 | .84 | .28 | .15 | .06 | 65 | 91 | 123 | 167 | 230 | 25 | 25 | 25 | 24 | 24 | 24 | 24 | 23 |
| | | | 1,000 | | 2.94 | 1.12 | .38 | .20 | .08 | | | | | | 1.8 | 2.2 | 2.7 | 3.0 | 3.7 | 4.4 | 5.8 | 7.1 |
| | | "C" | 2,000 | 5.0 | 5.87 | 2.24 | .75 | .40 | .15 | 69 | 97 | 124 | 168 | 232 | 25 | 25 | 25 | 25 | 25 | 24 | 24 | 24 |
| | | | 3,500 | | 10.3 | 3.91 | 1.31 | .71 | .26 | | | | | | 2.4 | 2.9 | 3.6 | 3.7 | 4.4 | 4.9 | 6.4 | 7.6 |
| | | | 5,000 | 5.8 | 14.7 | 5.59 | 1.87 | 1.01 | .37 | 74 | 100 | 127 | 170 | 233 | 25 | 25 | 25 | 25 | 25 | 25 | 24 | 24 |
| | | | 7,500 | | 22.0 | 8.40 | 2.80 | 1.51 | .56 | | | | | | 3.1 | 3.4 | 4.1 | 4.4 | 5.1 | 5.8 | 7.3 | 8.3 |
| | | | 10,000 | 6.5 | 29.4 | 11.2 | 3.73 | 2.01 | .74 | 79 | 104 | 130 | 172 | 233 | 25 | 25 | 25 | 25 | 25 | 25 | 25 | 24 |
| | | | 15,000 | | 44.0 | 16.8 | 5.60 | 3.02 | 1.11 | | | | | | 3.7 | 4.1 | 4.6 | 5.2 | 5.9 | 6.6 | 8.2 | 9.3 |
| | | | 20,000 | 7.1 | 58.7 | 22.4 | 7.46 | 4.03 | 1.48 | 84 | 109 | 134 | 175 | 234 | 25 | 25 | 25 | 25 | 25 | 25 | 25 | 24 |
| | | "D" | 25,000 | | 73.4 | 28.0 | 9.32 | 5.03 | 1.85 | | | | | | 4.2 | 4.6 | 5.5 | 6.2 | 7.0 | 7.8 | 9.3 | 11 |
| | | | 50,000 | | | | | | | | | | | | | | | | | | | |
| | | | 75,000 | | | | | | | | | | | | | | | | | | | |
| | | | 100,000 | | | | | | | | | | | | | | | | | | | |
| | | | 150,000 | | | | | | | | | | | | | | | | | | | |
| | | | 200,000 | | | | | | | | | | | | | | | | | | | |
| | | | 250,000 | | | | | | | | | | | | | | | | | | | |

(NOTE) For speeds not shown on the pump hydraulic charts, consult factory.

© 2009 The Gorman-Rupp Company

GORMAN-RUPP
ROTARY GEAR PUMPS

# GF

## PUMP HYDRAULIC SIZE CHART

15 GPM
1150 RPM

| NOMINAL CAP. GPM | NOMINAL SPEED RPM | ROTOR TRIM | VISCOSITY (SSU) | N.I.P.R. (PSIA) | FRICTION PIPE LOSS (PSI/FT) (Based on Sch 40 Steel Pipe) PIPE DIAMETER ¾" | 1" | 1¼" | 1½" | 2" | FULL BYPASS RELIEF VALVE PRESSURE (PSI) CRACKING PRESS. (PSI) LOW PRES R/V 50 | 75 | 100 | HI PRES R/V 150 | 200 | CAPACITY (GPM) / H.P. REQUIRED DIFFERENTIAL PRESSURE (PSI) 25 | 50 | 75 | 100 | 150 | 200 | 300 | 400 |
|---|---|---|---|---|---|---|---|---|---|---|---|---|---|---|---|---|---|---|---|---|---|---|
| | | | | | | | | | | | | | | | MEDIUM DUTY AND HEAVY DUTY | | | | | HEAVY DUTY ONLY | | |
| 15 | 1150 | STD | 28 | 2.2 | .01 | .01 | .01 | .01 | .01 | 59 | 86 | 111 | | | 13 | 11 | 10 | 9.5 | | | | |
| | | | 32 | | .17 | .06 | .02 | .01 | .01 | | | | | | .56 | .72 | .96 | 1.2 | | | | |
| | | | 38 | 2.2 | .22 | .07 | .02 | .01 | .01 | 59 | 86 | 111 | 161 | | 13 | 13 | 11 | 11 | 9.5 | | | |
| | | | 50 | | .27 | .09 | .03 | .01 | .01 | | | | | | .62 | .78 | 1.0 | 1.3 | 1.8 | | | |
| | | | 70 | 2.2 | .30 | .10 | .03 | .01 | .01 | 60 | 87 | 113 | 163 | 215 | 14 | 14 | 13 | 12 | 12 | 11 | | |
| | | | 100 | | .36 | .12 | .03 | .02 | .01 | | | | | | .66 | .83 | 1.1 | 1.4 | 1.9 | 2.4 | | |
| | | | 150 | 2.2 | .41 | .14 | .05 | .02 | .01 | 60 | 87 | 113 | 163 | 217 | 15 | 15 | 14 | 14 | 13 | 13 | 13 | 12 |
| | | | 200 | | .46 | .18 | .06 | .03 | .01 | | | | | | .78 | .98 | 1.2 | 1.5 | 1.9 | 2.4 | 3.5 | 4.6 |
| | | | 300 | 2.2 | .58 | .22 | .08 | .04 | .02 | 60 | 87 | 115 | 165 | 219 | 16 | 15 | 15 | 15 | 15 | 14 | 14 | 13 |
| | | | 500 | | .96 | .37 | .12 | .07 | .03 | | | | | | .94 | 1.2 | 1.4 | 1.6 | 2.1 | 2.6 | 3.6 | 4.7 |
| | | | 750 | 2.2 | 1.44 | .55 | .18 | .10 | .04 | 60 | 87 | 115 | 165 | 222 | 16 | 16 | 16 | 16 | 16 | 15 | 15 | 14 |
| | | | 1,000 | | 1.92 | .73 | .25 | .13 | .05 | | | | | | 1.1 | 1.3 | 1.5 | 1.7 | 2.2 | 2.7 | 3.7 | 4.8 |
| | | "C" | 2,000 | 2.8 | 3.83 | 1.46 | .49 | .26 | .10 | 62 | 90 | 115 | 165 | 222 | 17 | 17 | 16 | 16 | 16 | 16 | 15 | 15 |
| | | | 3,500 | | 6.70 | 2.55 | .85 | .46 | .17 | | | | | | 1.4 | 1.8 | 2.0 | 2.1 | 2.6 | 3.1 | 4.1 | 5.1 |
| | | | 5,000 | 3.2 | 9.57 | 3.64 | 1.22 | .66 | .24 | 65 | 92 | 117 | 167 | 224 | 17 | 17 | 16 | 16 | 16 | 16 | 16 | 16 |
| | | | 7,500 | | 14.4 | 5.46 | 1.83 | .99 | .36 | | | | | | 1.6 | 2.0 | 2.2 | 2.4 | 2.9 | 3.5 | 4.4 | 5.4 |
| | | | 10,000 | 3.6 | 19.1 | 7.29 | 2.43 | 1.31 | .49 | 68 | 94 | 119 | 169 | 224 | 17 | 17 | 16 | 16 | 16 | 16 | 16 | 16 |
| | | | 15,000 | | 28.7 | 10.9 | 3.65 | 1.97 | .73 | | | | | | 1.9 | 2.4 | 2.7 | 3.0 | 3.5 | 4.0 | 4.8 | 5.9 |
| | | | 20,000 | 3.9 | 38.3 | 14.6 | 4.87 | 2.63 | .97 | 72 | 97 | 122 | 172 | 224 | 17 | 17 | 16 | 16 | 16 | 16 | 16 | 16 |
| | | "D" | 25,000 | | 47.8 | 18.2 | 6.08 | 3.28 | 1.21 | | | | | | 2.2 | 2.8 | 3.2 | 3.5 | 4.0 | 4.5 | 5.3 | 6.5 |
| | | | 50,000 | 6.1 | 95.7 | 36.4 | 12.2 | 6.56 | 2.42 | 77 | 102 | 127 | 177 | 229 | 17 | 16 | 16 | 16 | 16 | 16 | 16 | 16 |
| | | | 75,000 | | 144 | 54.6 | 18.3 | 9.85 | 3.63 | | | | | | 3.6 | 4.5 | 5.1 | 5.7 | 6.3 | 6.8 | 7.7 | 8.8 |
| | | | 100,000 | | | | | | | | | | | | | | | | | | | |
| | | | 150,000 | | | | | | | | | | | | | | | | | | | |
| | | | 200,000 | | | | | | | | | | | | | | | | | | | |
| | | | 250,000 | | | | | | | | | | | | | | | | | | | |

(NOTE) For speeds not shown on the pump hydraulic charts, consult factory.

© 2009 The Gorman-Rupp Company

GORMAN-RUPP ROTARY GEAR PUMPS

# GF

## PUMP HYDRAULIC SIZE CHART

11 GPM
870 RPM

| NOMINAL CAP. GPM | NOMINAL SPEED RPM | ROTOR TRIM | VISCOSITY (SSU) | N.I.P.R. (PSIA) | FRICTION PIPE LOSS (PSI/FT) (Based on Sch 40 Steel Pipe) PIPE DIAMETER ¾" | 1" | 1¼" | 1½" | 2" | FULL BYPASS RELIEF VALVE PRESSURE (PSI) CRACKING PRESS. (PSI) LOW PRES R/V 50 | 75 | 100 | HI PRES R/V 150 | 200 | CAPACITY (GPM) / H.P. REQUIRED DIFFERENTIAL PRESSURE (PSI) 25 | 50 | 75 | 100 | 150 | 200 | 300 | 400 |
|---|---|---|---|---|---|---|---|---|---|---|---|---|---|---|---|---|---|---|---|---|---|---|
| | | | | | | | | | | | | | | | MEDIUM DUTY AND HEAVY DUTY | | | | | HEAVY DUTY ONLY | | |
| 11 | 870 | STD | 28 | 1.5 | .01 | .01 | .01 | .01 | .01 | 57 | 82 | 107 | | | 9 | 8 | 7 | 6 | | | | |
| | | | 32 | | .10 | .03 | .01 | .01 | .01 | | | | | | .32 | .53 | .71 | .91 | | | | |
| | | | 38 | 1.5 | .13 | .04 | .01 | .01 | .01 | 57 | 82 | 107 | 158 | | 10 | 9 | 8 | 7.5 | 6.5 | | | |
| | | | 50 | | .16 | .05 | .02 | .01 | .01 | | | | | | .50 | .59 | .85 | 1.1 | 1.4 | | | |
| | | | 70 | 1.5 | .18 | .06 | .02 | .01 | .01 | 57 | 82 | 108 | 159 | 210 | 10 | 10 | 9.5 | 9 | 8 | 7 | | |
| | | | 100 | | .21 | .06 | .02 | .01 | .01 | | | | | | .54 | .63 | .88 | 1.1 | 1.5 | 1.8 | | |
| | | | 150 | 1.5 | .26 | .09 | .03 | .01 | .01 | 58 | 83 | 109 | 159 | 212 | 11 | 11 | 10 | 10 | 10 | 9.5 | 9.5 | 8 |
| | | | 200 | | .33 | .12 | .05 | .02 | .01 | | | | | | .61 | .71 | .94 | 1.2 | 1.5 | 1.8 | 2.5 | 3.3 |
| | | | 300 | 1.5 | .43 | .16 | .06 | .03 | .01 | 58 | 83 | 110 | 160 | 213 | 12 | 12 | 11 | 11 | 11 | 10 | 10 | 9.5 |
| | | | 500 | | .70 | .27 | .09 | .05 | .02 | | | | | | .69 | .81 | 1.0 | 1.3 | 1.6 | 1.9 | 2.5 | 3.5 |
| | | | 750 | 1.5 | 1.05 | .40 | .14 | .07 | .03 | 58 | 83 | 112 | 162 | 215 | 12 | 12 | 12 | 12 | 12 | 11 | 11 | 11 |
| | | | 1,000 | | 1.41 | .54 | .18 | .10 | .04 | | | | | | .79 | .93 | 1.1 | 1.3 | 1.7 | 2.0 | 2.6 | 3.6 |
| | | "C" | 2,000 | 2.0 | 2.81 | 1.07 | .36 | .19 | .07 | 59 | 86 | 113 | 163 | 215 | 13 | 12 | 12 | 12 | 12 | 12 | 11 | 11 |
| | | | 3,500 | | 4.91 | 1.87 | .63 | .34 | .13 | | | | | | .98 | 1.2 | 1.3 | 1.5 | 1.8 | 2.2 | 2.8 | 3.7 |
| | | | 5,000 | 2.4 | 7.02 | 2.67 | .89 | .48 | .18 | 61 | 86 | 113 | 163 | 215 | 13 | 12 | 12 | 12 | 12 | 12 | 12 | 11 |
| | | | 7,500 | | 10.5 | 4.00 | 1.34 | .72 | .27 | | | | | | 1.3 | 1.5 | 1.7 | 1.9 | 2.2 | 2.6 | 3.2 | 4.1 |
| | | | 10,000 | 2.7 | 14.0 | 5.34 | 1.78 | .96 | .36 | 64 | 89 | 115 | 167 | 217 | 13 | 12 | 12 | 12 | 12 | 12 | 12 | 12 |
| | | | 15,000 | | 21.1 | 8.01 | 2.68 | 1.45 | .53 | | | | | | 1.5 | 1.8 | 2.1 | 2.3 | 2.6 | 2.9 | 3.6 | 4.4 |
| | | | 20,000 | 3.0 | 28.1 | 10.7 | 3.57 | 1.93 | .71 | 67 | 92 | 117 | 169 | 219 | 13 | 12 | 12 | 12 | 12 | 12 | 12 | 12 |
| | | "D" | 25,000 | | 35.1 | 13.4 | 4.46 | 2.41 | .89 | | | | | | 1.9 | 2.2 | 2.4 | 2.5 | 2.9 | 3.3 | 4.1 | 4.8 |
| | | | 50,000 | 4.9 | 70.2 | 26.7 | 8.92 | 4.81 | 1.77 | 70 | 95 | 123 | 173 | 225 | 13 | 12 | 12 | 12 | 12 | 12 | 12 | 12 |
| | | | 75,000 | | 105 | 40.1 | 13.4 | 7.22 | 2.66 | | | | | | 2.9 | 3.4 | 3.6 | 3.8 | 4.2 | 4.6 | 5.4 | 6.1 |
| | | | 100,000 | 7.1 | 140 | 53.4 | 17.9 | 9.63 | 3.55 | 74 | 99 | 127 | 177 | 231 | 12 | 12 | 12 | 12 | 12 | 12 | 12 | 12 |
| | | | 150,000 | | 211 | 80.1 | 26.8 | 14.5 | 5.32 | | | | | | 3.6 | 4.3 | 4.5 | 4.7 | 5.1 | 5.4 | 6.2 | 6.9 |
| | | | 200,000 | | | | | | | | | | | | | | | | | | | |
| | | | 250,000 | | | | | | | | | | | | | | | | | | | |

(NOTE) For speeds not shown on the pump hydraulic charts, consult factory.

© 2009 The Gorman-Rupp Company

GORMAN-RUPP
ROTARY GEAR PUMPS

# GF

## PUMP HYDRAULIC SIZE CHART

8 GPM
580 RPM

| NOMINAL CAP. GPM | NOMINAL SPEED RPM | ROTOR TRIM | VISCOSITY (SSU) | N.I.P.R. (PSIA) | FRICTION PIPE LOSS (PSI/FT) (Based on Sch 40 Steel Pipe) PIPE DIAMETER ¾" | 1" | 1¼" | 1½" | 2" | FULL BYPASS RELIEF VALVE PRESSURE (PSI) CRACKING PRESS. (PSI) LOW PRES R/V 50 | 75 | 100 | HI PRES R/V 150 | 200 | CAPACITY (GPM) / H.P. REQUIRED DIFFERENTIAL PRESSURE (PSI) 25 | 50 | 75 | 100 | 150 | 200 | 300 | 400 |
|---|---|---|---|---|---|---|---|---|---|---|---|---|---|---|---|---|---|---|---|---|---|---|
| | | | | | | | | | | | | | | | MEDIUM DUTY AND HEAVY DUTY | | | | | HEAVY DUTY ONLY | | |
| 8 | 580 | STD | 28 | 1.1 | .01 | .01 | .01 | .01 | .01 | 56 | 81 | 106 | | | 6 | 5 | 4.5 | 4 | | | | |
| | | | 32 | | .06 | .02 | .01 | .01 | .01 | | | | | | .21 | .35 | .47 | .61 | | | | |
| | | | 38 | 1.1 | .07 | .03 | .01 | .01 | .01 | 56 | 81 | 106 | 157 | | 6.5 | 6 | 5.5 | 4.5 | 4 | | | |
| | | | 50 | | .09 | .03 | .01 | .01 | .01 | | | | | | .34 | .40 | .57 | .74 | .92 | | | |
| | | | 70 | 1.1 | .10 | .04 | .01 | .01 | .01 | 56 | 81 | 107 | 158 | 209 | 7 | 6.5 | 6 | 6 | 5.5 | 4.5 | | |
| | | | 100 | | .10 | .04 | .01 | .01 | .01 | | | | | | .36 | .42 | .59 | .76 | .98 | 1.2 | | |
| | | | 150 | 1.1 | .15 | .05 | .02 | .01 | .01 | 57 | 82 | 108 | 158 | 211 | 7.5 | 7.5 | 7 | 6.5 | 6.5 | 6 | 6 | 5 |
| | | | 200 | | .24 | .08 | .03 | .02 | .01 | | | | | | .41 | .48 | .63 | .78 | 1.0 | 1.2 | 1.7 | 2.2 |
| | | | 300 | 1.1 | .31 | .12 | .04 | .02 | .01 | 57 | 82 | 109 | 159 | 212 | 8 | 8 | 7.5 | 7 | 7 | 7 | 6.5 | 6 |
| | | | 500 | | .51 | .19 | .07 | .04 | .01 | | | | | | .46 | .54 | .69 | .84 | 1.1 | 1.3 | 1.7 | 2.3 |
| | | | 750 | 1.1 | .77 | .29 | .10 | .05 | .02 | 57 | 82 | 111 | 161 | 214 | 8.5 | 8 | 8 | 8 | 8 | 7 | 7.5 | 7 |
| | | | 1,000 | | 1.02 | .39 | .14 | .07 | .03 | | | | | | .53 | .62 | .76 | .89 | 1.1 | 1.4 | 1.7 | 2.4 |
| | | "C" | 2,000 | 1.5 | 2.04 | .78 | .26 | .14 | .05 | 58 | 85 | 112 | 162 | 214 | 8.5 | 8.5 | 8 | 8 | 8 | 8 | 7.5 | 7.5 |
| | | | 3,500 | | 3.57 | 1.36 | .46 | .25 | .09 | | | | | | .66 | .77 | .88 | .99 | 1.2 | 1.5 | 1.9 | 2.5 |
| | | | 5,000 | 1.9 | 5.01 | 1.94 | .65 | .35 | .13 | 60 | 85 | 112 | 162 | 214 | 8.5 | 8.5 | 8 | 8 | 8 | 8 | 8 | 7.5 |
| | | | 7,500 | | 7.65 | 2.91 | .97 | .53 | .19 | | | | | | .84 | .99 | 1.1 | 1.3 | 1.5 | 1.7 | 2.1 | 2.7 |
| | | | 10,000 | 2.2 | 10.2 | 3.88 | 1.30 | .70 | .26 | 63 | 88 | 114 | 166 | 216 | 8.5 | 8.5 | 8 | 8 | 8 | 8 | 8 | 7.5 |
| | | | 15,000 | | 15.3 | 5.83 | 1.95 | .105 | .39 | | | | | | 1.0 | 1.2 | 1.3 | 1.4 | 1.6 | 1.9 | 2.4 | 2.9 |
| | | | 20,000 | 2.5 | 20.4 | 7.77 | 2.59 | 1.40 | .52 | 66 | 91 | 116 | 168 | 218 | 8.5 | 8.5 | 8 | 8 | 8 | 8 | 8 | 8 |
| | | "D" | 25,000 | | 25.5 | 9.71 | 3.24 | 1.75 | .65 | | | | | | 1.0 | 1.2 | 1.4 | 1.5 | 1.7 | 2.0 | 2.5 | 3.0 |
| | | | 50,000 | 4.0 | 51.1 | 19.4 | 6.50 | 3.50 | 1.29 | 68 | 93 | 120 | 170 | 222 | 8.5 | 8.5 | 8 | 8 | 8 | 8 | 8 | 8 |
| | | | 75,000 | | 76.5 | 29.1 | 9.73 | 5.25 | 1.93 | | | | | | 1.6 | 1.9 | 2.1 | 2.2 | 2.4 | 2.7 | 3.2 | 3.7 |
| | | | 100,000 | 6.0 | 102 | 38.9 | 13.0 | 7.00 | 2.58 | 70 | 95 | 122 | 172 | 224 | 8.5 | 8 | 8 | 8 | 8 | 8 | 8 | 8 |
| | | | 150,000 | | 153 | 58.3 | 19.5 | 10.5 | 3.87 | | | | | | 2.1 | 2.5 | 2.6 | 2.7 | 3.0 | 3.2 | 3.7 | 4.2 |
| | | | 200,000 | 9.4 | 204 | 77.7 | 26.0 | 14.0 | 5.15 | 76 | 101 | 130 | 180 | 236 | 8.5 | 8.5 | 8.5 | 8.5 | 8 | 8 | 8 | 8 |
| | | | 250,000 | | – | – | – | – | – | | | | | | 2.5 | 3.0 | 3.1 | 3.2 | 3.4 | 3.7 | 4.2 | 4.7 |

(NOTE) For speeds not shown on the pump hydraulic charts, consult factory.

© 2009 The Gorman-Rupp Company