GORMAN-RUPP
ROTARY GEAR PUMPS

GHC SERIES
HEAVY DUTY COMPACT
ROTARY GEAR PUMP

SHOWN AS FLANGE MOUNT

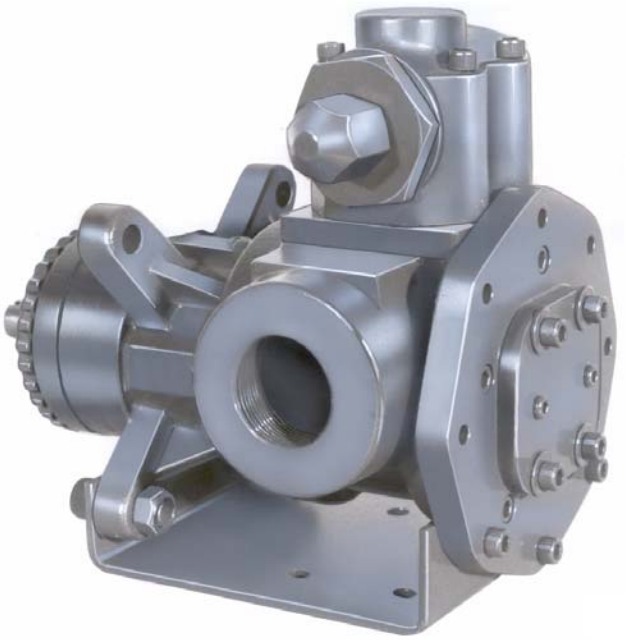

SHOWN WITH FOOT BRACKET

The GHC iron series is designed for applications in the operating ranges noted below. These units are available with head jackets for temperature control, carbon graphite bushings for low viscosity liquids, silicon carbide bushings for wear resistance, and numerous shaft seal options described on the following pages.

These units may be foot mounted or, by using a motor adaptor, direct connected to NEMA "C" flange motors.

This heavy duty series provides superior rotor shaft support and an integral, maintenance-free radial/ thrust bearing for reduced deflection and wear.

FEATURES

300 PSI CAPABILITY

BALL BEARING THRUST CONTROL

ROTOR END CLEARANCE EXTERNALLY ADJUSTABLE

HIGH STRENGTH, COMPUTER PROFILED GEARING FOR QUIET OPERATION

C-FLANGE MOTOR ADAPTATION

MULTIPLE PORT POSITIONS

OPERATING RANGE

CAPACITY	(GPM):	(3 TO 107)
	[LPM]:	[11 TO 405]
PRESSURE	(PSI) :	[0 TO 300)
	[BAR] :	[0 TO 21]
VISCOSITY	(SSU):	(28 TO 250,000)
	[cSt] :	[1 TO 55,000]
TEMPERATURE	(F) :	(-60° TO 350°)
	[C] :	[-51° TO 177°]

APPLICATIONS

USE WITH ANY CLEAN LIQUID COMPATIBLE WITH CAST IRON

- ★ BOOSTER SERVICE
- ★ CIRCULATING
- ★ FILTERING
- ★ LUBRICATING
- ★ TRANSFERRING
- ★ LOW PRESSURE FLUID POWER

SUPERSEDES ALL PREVIOUS ISSUES
©2010 The Gorman-Rupp Company

Standard Construction

EXTERIOR	ROTOR & IDLER	HOUSING PORTS	BUSHINGS	IDLER PIN	SHAFT	SHAFT SEALING		ROTATION	INTERNAL RELIEF VALVE	
						MECH. SEAL ●	LIPSEAL ■		MATERIAL	SETTING
CAST IRON	HIGH STRENGTH IRON	180° TAPPED	BRONZE	HARDENED STEEL	STEEL	VITON	BUNA-N	C.W.	DUCTILE IRON	75 PSI [5 BAR]

Standard Models

G H C 1 DC 3 – B

GEAR | DUTY | DESIGN | PORT SIZE | HYDRAULIC SIZE | SEAL | STYLE

MODEL NUMBER	NOM. CAPACITY - SPEED				MAXIMUM				SHIPPING DATA	
	MAXIMUM		ALTERNATIVE		DIFFERENTIAL PRESSURE-PSI [BAR]			TEMP.		
	GPM [LPM]	RPM 60 Hz [50 HZ]	GPM [LPM]	RPM③ 60 Hz [50 Hz]	BELOW 38 SSU [4 cSt]	38 TO 100 SSU [21 cSt]	100 TO 250,000 SSU [55,000 cSt]	°F [°C]	Weight LBS [KG]	Volume CU. FT.
GHC 1DC 3-B ● ① **GHC 1DC 4-B** ■	9 [28]	1750 [1460]	6 [19]	1150 [960]	100 [7]	150 [10]	300 [21]	● 350 [177] ■ 225 [107]	29 [13,2]	0.6
GHC 1DE 3-B ● ① **GHC 1DE 4-B** ■	11 [35]		7 [22]						30 [13,6]	0.6
GHC 1-1/2 GC 3-B ● **GHC 1-1/2 GC 4-B** ■	16 [50]		10 [32]						58 [26,4]	2.9
GHC 2 GC 3-B ● GHC 2 GC 4-B ■									58 [26,4]	2.9
GHC 1-1/2 GF 3-B ● **GHC 1-1/2 GF 4-B** ■	23 [73]		15 [47]						58 [26,4]	2.9
GHC 2 GF 3-B ● GHC 2 GF 4-B ■									58 [26,4]	2.9
GHC 1-1/2 GH 3-B ● **GHC 1-1/2 GH 4-B** ■	31 [98]		20 [63]						58 [26,4]	2.9
GHC 2 GH 3-B ● GHC 2 GH 4-B ■									58 [26,4]	2.9
GHC 1-1/2 GJ 3-B ● ② GHC 1-1/2 GJ 4-B ■	38 [120]		25 [79]				200 [14]		58 [26,4]	2.9
GHC 2 GJ 3-B ● ② **GHC 2 GJ 4-B** ■									58 [26,4]	2.9
GHC 2 JG 3-B ● **GHC 2 JG 4-B** ■	40 [126]	1150 [960]	30 [95]	870 [725]			300 [21]		128 [58,2]	5.3
GHC 2-1/2 JG 3-B ● GHC 2-1/2 JG 4-B ■									128 [58,2]	5.3
GHC 3 JG 3-B ● GHC 3 JG 4-B ■									128 [58,2]	5.3

STANDARD MODELS CONTINUED

● MECHANICAL SEAL ■ LIPSEAL

NOTE: RECOMMENDED PORT SIZES ARE SHOWN IN **BOLDFACE**. EXAMPLE: **GHC 1 DC 3-B**

① 3450 [2875] RPM PERMISSIBLE TO 1,000 SSU [220 cSt] AND 100 PSI [7 BAR]

② PUMP LIMITED TO 200 PSI MAXIMUM PRESSURE.

③ MAXIMUM SPEED FOR AMMONIA MODELS.

SUPERSEDES ALL PREVIOUS ISSUES
©2010 The Gorman-Rupp Company

Standard Models Cont'd

MODEL NUMBER	NOM. CAPACITY - SPEED				MAXIMUM				SHIPPING DATA	
	MAXIMUM		ALTERNATIVE		DIFFERENTIAL PRESSURE-PSI [BAR]			TEMP.	Weight	Volume
	GPM [LPM]	RPM 60 Hz [50 HZ]	GPM [LPM]	RPM (2) 60 Hz [50 Hz]	BELOW 38 SSU [4 cST]	38 TO 100 SSU [21 cST]	100 TO 250,000 SSU [55,000 cSt]	°F [°C]	LBS [KG]	CU. FT.
GHC 2 JJ 3-B ● GHC 2 JJ 4-B ■	56 [177]	1150 [960]	42 [133]	870 [725]	100 [7]	150 [10]	300 [21]	● 350 [177] ■ 225 [107]	132 [60]	5.3
GHC 2-1/2 JJ 3-B ● **GHC 2-1/2 JJ 4-B** ■									132 [60]	5.3
GHC 3 JJ 3-B ● GHC 3 JJ 4-B ■									132 [60]	5.3
GHC 2 JL 3-B ● GHC 2 JL 4-B ■	77 [243]		58 [183]						132 [60]	5.3
GHC 2-1/2 JL 3-B ● GHC 2-1/2 JL 4-B ■									132 [60]	5.3
GHC 3 JL 3-B ● **GHC 3 JL 4-B** ■									132 [60]	5.3
GHC 2 JP 3-B ● (1) GHC 2 JP 4-B ■	107 [338]		81 [256]				200 [14]		132 [60]	5.3
GHC 2-1/2 JP 3-B ● (1) GHC 2-1/2 JP 4-B ■									132 [60]	5.3
GHC 3 JP 3-B ● (1) **GHC 3 JP 4-B** ■									132 [60]	5.3

NOTE: RECOMMENDED PORT SIZES ARE SHOWN IN **BOLDFACE**. EXAMPLE: **GHC 1 DC 3-B**

(1) PUMP LIMITED TO 200 PSI MAXIMUM PRESSURE.

(2) MAXIMUM SPEED FOR AMMONIA MODELS.

SUPERSEDES ALL PREVIOUS ISSUES
©2010 The Gorman-Rupp Company

APPLICATION RECOMMENDATIONS:		
APPLICATION	**OPTIONS REQUIRED (Select One from Each Row)**	**OPERATING LIMITATIONS**
AMMONIA	25G, 25H, 25R, 25S, 25T 40N 60K 70E 90A	PRESSURE: 200 PSI MAX. 2/3 RATED SPEED. 4 FEET NPSHr
LP GAS	25G OR 25H 40F OR 40N 70D OR 70E	PRESSURE: 200 PSI MAX. 3 FEET NPSHr

NOTE: PROPER PUMP APPLICATION REQUIRES CONSIDERATION OF ADDITIONAL FACTORS. PLEASE REVIEW APPLICATION GUIDE IN SECTION 500 OR CONSULT THE FACTORY.

SUPERSEDES ALL PREVIOUS ISSUES
©2010 The Gorman-Rupp Company

STANDARD

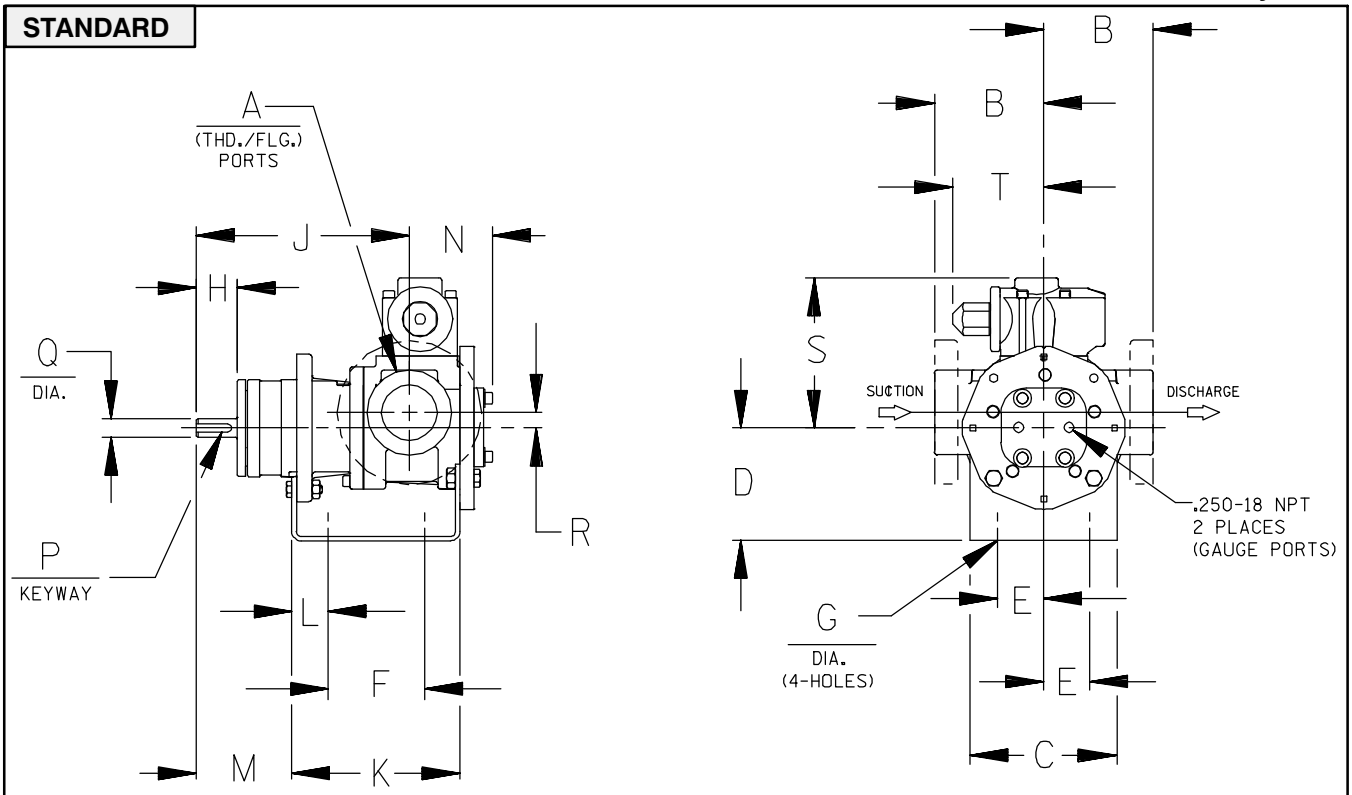

CAD FILE NO.: 16458

MODEL NUMBERS	PUMP DIMENSIONS - INCHES [MILLIMETERS]																	
	A	B	C	D	E	F	G	H	J	K	L	M	N	P	Q	R	S	T
GHC D	1"	2.50 [64] † 2.75 [70] ✳ 3.19 [81] † 4.00 [102] ⊢	4.00 [102]	3.50 [89] ✳ 4.50 [114] 5.25 [133]	1.62 [41]	3.12 [79]	.41 [10]	1.16 [30]	6.19 [157]	5.04 [128]	.76 [19]	2.62 [66]	2.74 [70]	.12 [3] × .75 [19]	.50 [13]	.62 [16]	5.19 [132]	3.58 [91]
GHC G	1-1/2" 2"	3.50 [89] † 3.75 [95] ✳ 4.00 [102] ⊢	5.88 [149]	3.50 [89] ✳ 4.50 [114] 5.25 [133] 6.25 [159]	1.62 [41]	4.00 [102]	.41 [10]	1.62	8.50 [216]	6.71 [170]	1.06 [27]	3.82 [97]	3.35 [85]	.19 [5] × 1.25 [32]	.75 [19]	.62 [16]	6.00 [152]	3.62 [92]
GHC J	2" 2-1/2" 3"	4.50 [114] † 5.00 [127] ✳ 6.00 [152] ⊢ 6.31 [160] ⊢ †	6.88 [175]	4.50 [114] 5.25 [133] ✳ 6.25 [159] 7.00 [178] 8.00 [203]	2.88 [73]	4.25 [108]	.44 [11]	2.50 [64]	12.12 [308]	9.75 [248]	1.75 [44]	5.50 [140]	4.66 [118]	.25 [6] × 2.00 [51]	1.00 [25]	1.12 [28]	9.06 [230]	6.75 [171]

✳ STANDARD DIMENSION

† 90° HOUSING

⊢ PORTS ARE COMPATIBLE WITH 125# OR 250# ANSI CAST IRON FLANGES. ALL OTHER PORTS ARE TAPPED NPT FOR ANSI PIPE. OPTIONAL (DIN) FLANGES OR TAPPED (BSP) PORTS AVAILABLE FOR EXPORT MARKET.

Continued –

SUPERSEDES ALL PREVIOUS ISSUES
©2010 The Gorman-Rupp Company

Basic Pump Dimensions

OPTION 80Z (SHOWN LESS FOOT)

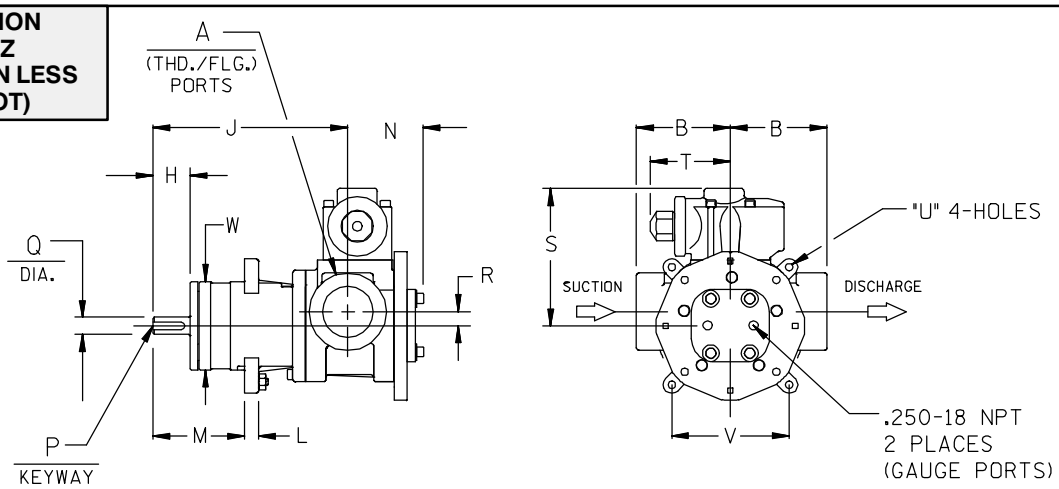

CAD FILE NO.: 16458C

MODEL NUMBERS	PUMP DIMENSIONS - INCHES [MILLIMETERS]														
	A	B	H	J	L	M	N	P	Q	R	S	T	U	V	W
GHC D	1"	2.50 [64] † 2.75 [70] ✳ 3.19 [81] ⊢ 4.00 [102] ⊢	1.16 [30]	6.19 [157]	.44 [11]	2.80 [71]	2.74 [70]	.12 [3] × .75 [19]	.50 [13]	.62 [16]	5.19 [132]	3.58 [91]	.41 [10]	3.00 [76]	2.85 [72]
GHC G	1-1/2"	3.50 [89] †	1.62 [41]	8.50 [216]	.62 [16]	4.00 [102]	3.35 [85]	.19 [5] × 1.25 [32]	.75 [19]	.62 [16]	6.00 [152]	3.62 [92]	.53 [13]	4.75 [121]	3.85 [98]
	2"	3.75 [95] ✳ 4.00 [102] ⊢													
GHC J	2"	4.50 [114] †	2.50 [64]	12.12 [308]	.62 [16]	5.75 [146]	4.66 [118]	.25 [6] × 2.00 [51]	1.00 [25]	1.12 [28]	9.06 [230]	6.75 [171]	.53 [13]	4.75 [121]	4.85 [123]
	2-1/2"	5.00 [127] ✳ 6.00 [152] ⊢													
	3"	6.31 [160] ⊢ †													

✳ STANDARD DIMENSION

⊢ PORTS ARE COMPATIBLE WITH 125# OR 250# ANSI CAST IRON FLANGES. ALL OTHER PORTS ARE TAPPED NPT FOR ANSI PIPE. OPTIONAL (DIN) FLANGES OR TAPPED (BSP) PORTS AVAILABLE FOR EXPORT MARKET.

† 90° HOUSING

©2010 The Gorman-Rupp Company

GHC

DIRECT FLEX DRIVE OPTION DIMENSIONS

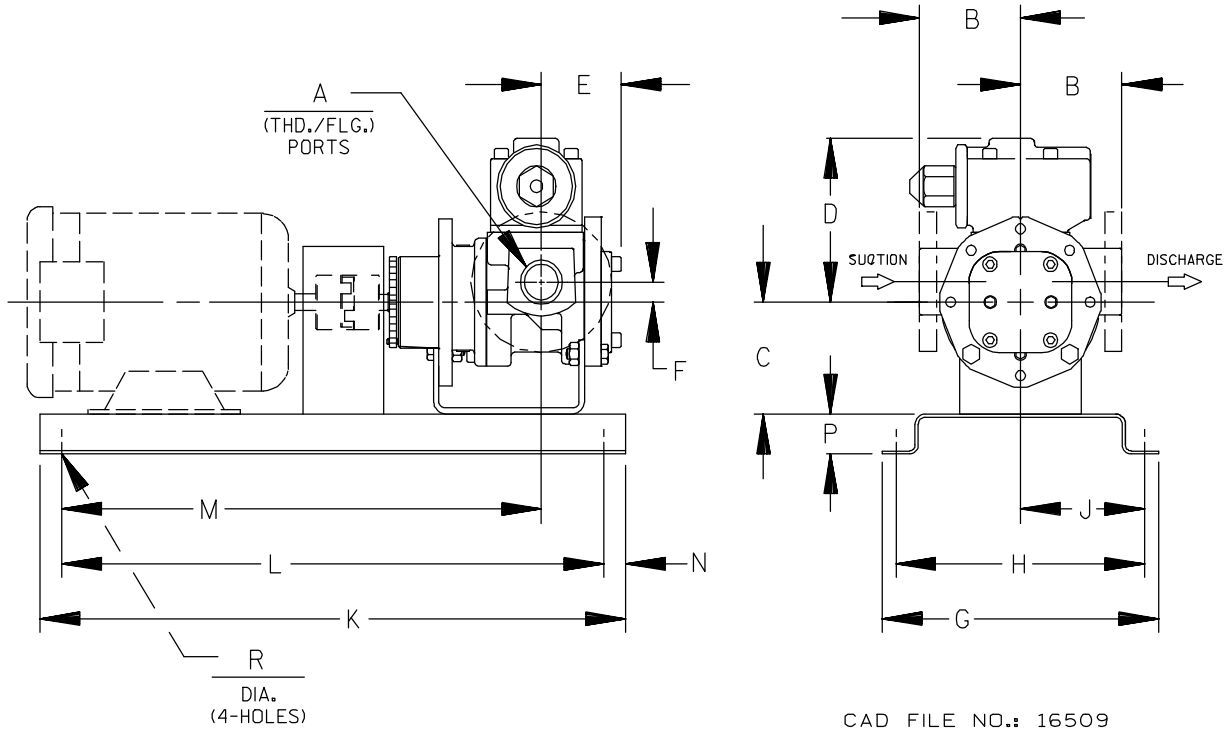

CAD FILE NO.: 16509

PUMP MODEL	PUMP DIMENSIONS - INCHES[MILLIMETERS]															
	A	MOTOR FRAME	B	C	D	E	F	G	H	J	K	L	M	N	P	R
GHC D	1"	56/56 H	2.50 [64] †	3.50 [89] ✳	5.19 [132]	2.73 [69]	.62 [16]	10.14 [258]	8.88 [226]	4.44 [113]	25.25 [641]	19.25 [489]	20.50 [521]	3.00 [76]	2.00 [51]	.56 [14]
		143T/145T	2.75 [70] ✳	4.50 [114]						7.75 [197]	33.50 [851]	23.50 [597]	26.87 [682]	5.00 [127]	4.00 [102]	
		182T/184T	3.19 [81] ⊢ †													
		213T/215T	4.00 [102] ⊢	5.25 [133]				17.50 [445]	15.50 [394]							
GHC G	1- ½"	56/56H	3.50 [89] †	3.50 [89] ✳	6.00 [152]	3.35 [85]	.62 [16]	10.14 [258]	8.88 [226]	4.44 [113]	25.25 [641]	19.25 [489]	20.38 [518]	3.00 [76]	2.00 [51]	.56 [14]
		182T/184T	3.75 [95] ✳	4.50 [114]						7.75 [197]	33.50 [851]	23.50 [597]	26.75 [679]	5.00 [127]	4.00 [102]	
		213T/215T	4.00 [102] ⊢	5.25 [133]												
	2"	254T/256T		6.25 [159]				17.50 [445]	15.50 [394]							
GHC J	2"	182T/184T	4.50 [114] †	4.50 [114]	9.06 [230]	4.66 [118]	1.12 [28]	21.00 [533]	19.00 [483]	9.50 [241]	45.50 [1156]	35.50 [902]	38.38 [975]	5.00 [127]	4.00 [102]	.69 [18]
		213T/215T		5.25 [133] ✳												
	2- ½"	254T/256T	5.00 [127] ✳	6.25 [159]												
		284T/286T	6.00 [152] ⊢	7.00 [178]												
	3"	324T/326T	6.31 [160] ⊢ †	8.00 [203]												

✳ STANDARD DIMENSION

† 90° HOUSING

⊢ PORTS ARE COMPATIBLE WITH 125# OR 250# ANSI CAST IRON FLANGES. ALL OTHER PORTS ARE TAPPED NPT FOR ANSI PIPE. OPTIONAL (DIN) FLANGES OR TAPPED (BSP) PORTS AVAILABLE FOR EXPORT MARKET.

NOTE: CONSULT FACTORY FOR;

1. **HORSEPOWERS & FRAMES NOT SHOWN**
2. **DRIP PAN BASES**

REFERENCE: PUMP FOOT BRACKET OPTIONS

MOTOR FRAME	CENTER HEIGHT	PUMP OPTION
56, 143T, 145T	3.50”	80C (STD. “D/G”)
182, 182T, 184, 184T	4.50”	80F
213, 213T, 215, 215T	5.25”	80J (STD. “J”)
254T, 254U, 256T, 256U	6.25”	80P
284T, 284U, 286T, 286U	7.00”	80S

©2010 The Gorman-Rupp Company

GHC

DIRECT FLEX DRIVE OPTIONS

(Drive Assembly Number Includes Base, Coupling & Guard, But **NOT** the Motor)

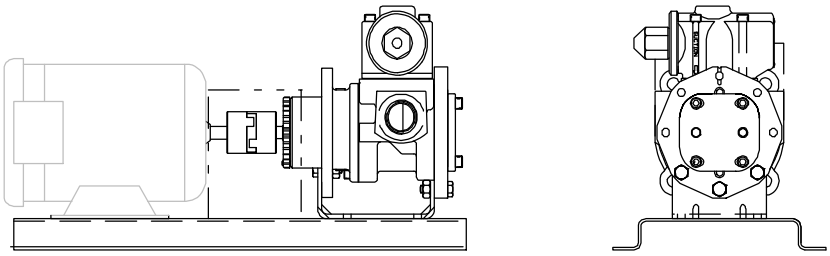

PUMP MODEL NUMBER	60 Hz RPM	50 Hz RPM	FRAME	MTG. FT. OPTION REQ.	DRIVE ASSY NO.
GHC D	3450 1750 1150 850	2900 1450 950 700	56/56H	STD	90351—086
			143T/145T	STD	90351—052
			184	80F	90351—089
			182T/184T	80F	90351—090
			213T/215T	80J	90351—094
GHC G	1750 1150 850	1450 950 700	56/56H	STD	90351—156
			143T/145T	STD	90351—162
			182T/184T	80F	90351—168
			213T/215T	80J	90351—206
			213T/215T	80J	90351—172
			254T	80P	90351—180
GHC J	1150 850	950 700	182T/184T	80F	90351—260
			213T/215T	STD	90351—268
			254T/256T	80P	90351—276
			284T/286T	80S	90351—280

NOTE: CONSULT FACTORY FOR;
HORSEPOWERS & FRAMES NOT SHOWN
DRIP PAN BASES

©2010 The Gorman-Rupp Company

GHC

DIRECT FLEX C-FLANGE DRIVE OPTION DIMENSIONS

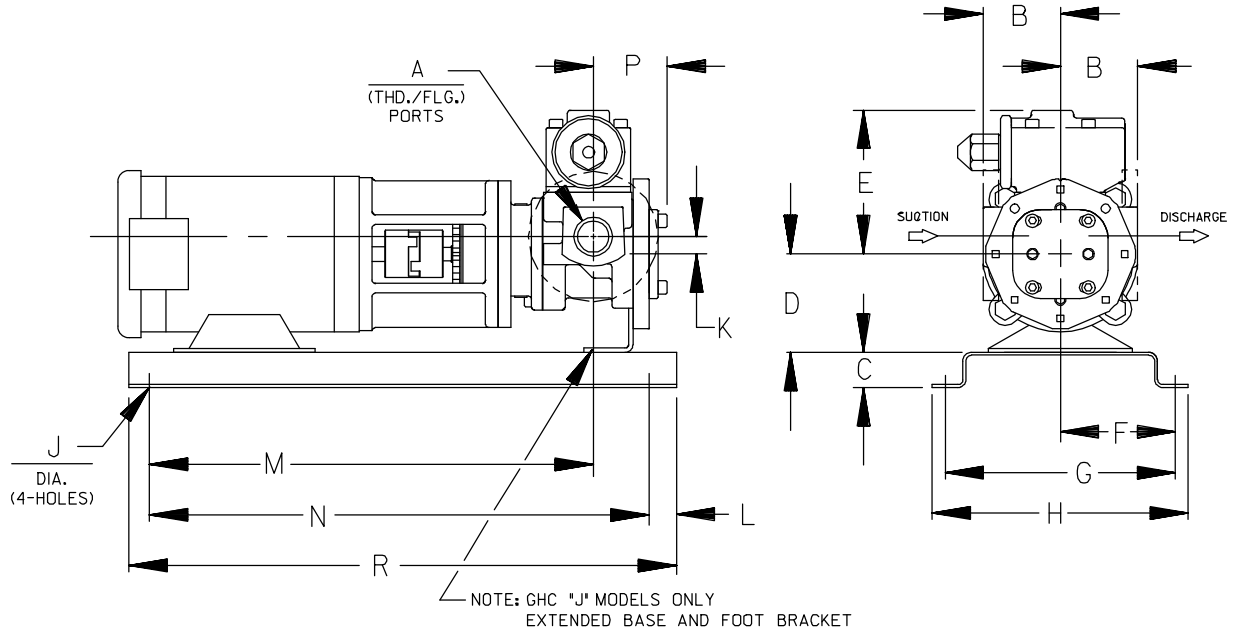

CAD FILE NO.: 16652

PUMP MODEL	PUMP DIMENSIONS - INCHES[MILLIMETERS]															
	A	MOTOR FRAME	B	C	D	E	F	G	H	J	K	L	M	N	P	R
GHC D	1"	56C	2.50 [64] †	2.00 [51]	3.50 [89]	5.19 [132]	6.25 [159]	12.50 [318]	14.50 [368]	.56 [14]	.62 [16]	2.00 [51]	17.24 [438]	12.75 [324]	2.73 [69]	16.75 [425]
		143TC/145TC	2.75 [70] ✳										17.55 [446]			
			3.12 [79] ⊢ †													
		182C/184C	4.00 [82] ⊢		4.50 [114]								18.80 [478]			
GHC G	1- 1/2"	56C	3.50 [89] †	2.00 [51]	3.50 [89]	6.00 [152]	6.25 [159]	12.50 [318]	14.50 [368]	.56 [14]	.62 [16]	2.00 [51]	19.42 [493]	12.75 [324]	3.35 [85]	16.75 [425]
		143TC/145TC														
		182TC/184TC	3.75 [95] ✳		4.50 [114]								19.73 [501]			
		182C/184C														
	2"	213TC/215TC	4.00 [102] ⊢		5.25 [133]								21.86 [555]			
GHC J	2"	182TC/184TC	4.50 [114] †	4.00 [102]	4.50 [114]	9.06 [230]	9.50 [241]	19.00 [483]	21.00 [533]	.69 [18]	1.12 [28]	5.00 [127]	26.86 [682]	35.50 [902]	4.66 [118]	45.50 [1156]
	2- 1/2"	213TC/215TC	5.00 [127] ✳		5.25 [133]								27.75 [705]			
			6.00 [152] ⊢													
	3"	254TC/256TC	6.31 [160] ⊢ †		6.25 [159]								33.74 [857]			

✳ STANDARD DIMENSION

⊢ PORTS ARE COMPATIBLE WITH 125# OR 250# ANSI CAST IRON FLANGES. ALL OTHER PORTS ARE TAPPED NPT FOR ANSI PIPE. OPTIONAL (DIN) FLANGES OR TAPPED (BSP) PORTS AVAILABLE FOR EXPORT MARKET.

† 90° HOUSING

NOTE: CONSULT FACTORY FOR;

1. **HORSEPOWERS & FRAMES NOT SHOWN**
2. **DRIP PAN BASES**

REFERENCE: PUMP FOOT BRACKET OPTIONS

HYDRAULIC SIZE	MOTOR FRAME	PUMP OPTION
D	56C, 143TC, 145TC, 182C, 184C	80Y
G	56C, 143TC, 145TC, 182C, 184C	80Y
J	213TC, 215TC 254TC, 256TC	80X 80W

©2010 The Gorman-Rupp Company

GHC

DIRECT FLEX C-FLANGE DRIVE OPTIONS

(Drive Assemby Number Includes Base & Coupling, But **NOT** the Motor)

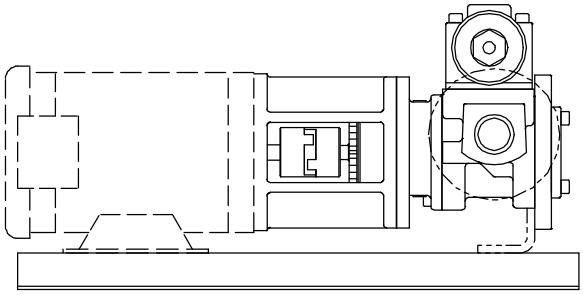

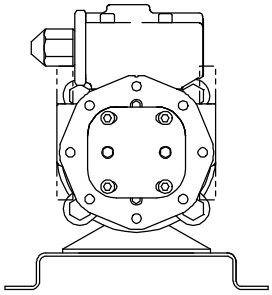

PUMP MODEL NUMBER	60Hz RPM	FRAME	MTG. FT. OPTION REQ.	DRIVE ASSY NO.
GHC D	3450 1750 1150 850	56C	80Y	90351–540
		143TC	80Y	90351–541
		145TC	80Y	90351–544
		184C	80Y	90351–590
GHC G	1750 1150 850	56C	80Y	90351–656
		143TC	80Y	90351–659
		145TC	80Y	90351–660
		184C	80Y	90351–668
		182TC	80X	90351–672
		184TC	80X	90351–674
GHC J	1150 850	213TC	80X	90351–764
		215TC	80X	90351–768
		254TC	80W	90351–772
		256TC	80W	90351–776
		184TC	80X	90351–814

NOTE: CONSULT FACTORY FOR;
HORSEPOWERS & FRAMES NOT SHOWN
DRIP PAN BASES

©2010 The Gorman-Rupp Company

GHC

GRR REDUCER C-FLANGE FLEX DRIVE OPTION DIMENSIONS

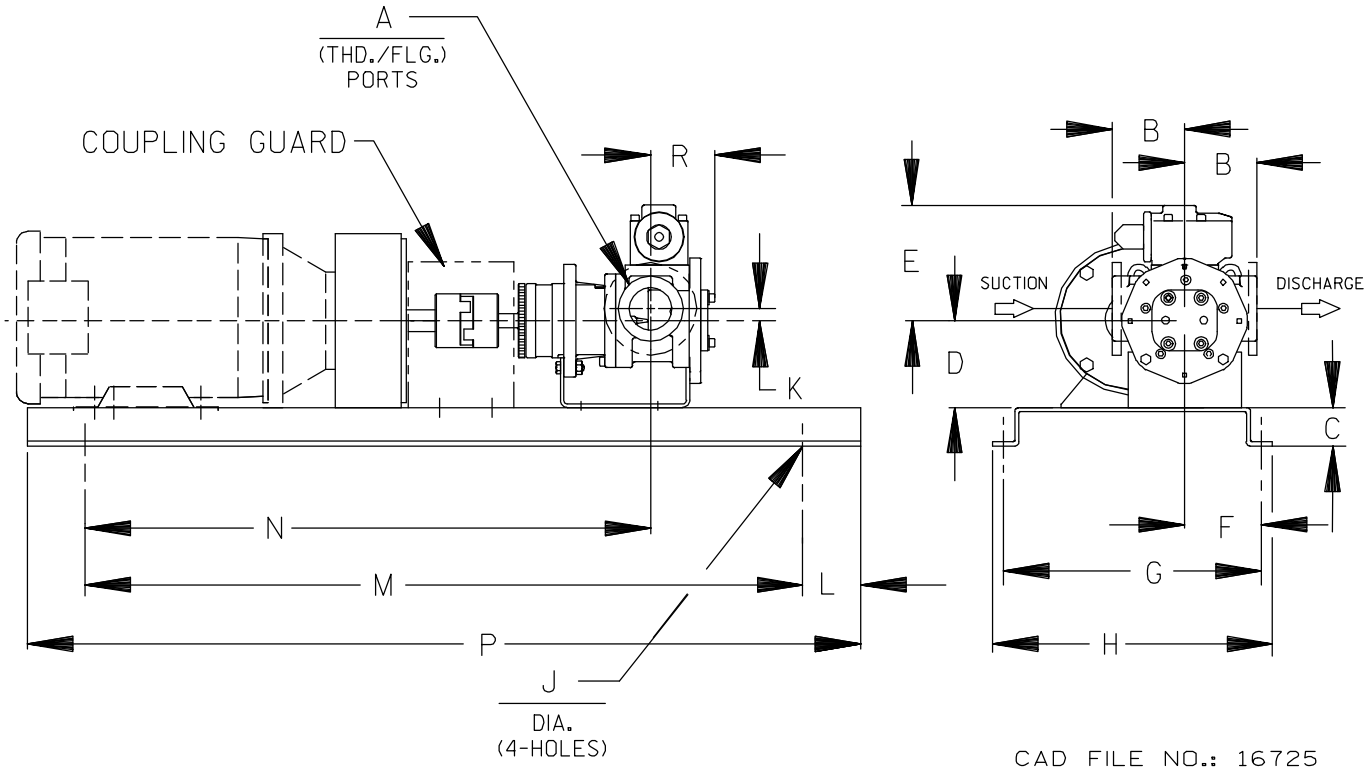

CAD FILE NO.: 16725

PUMP MODEL	PUMP DIMENSIONS - INCHES[MILLIMETERS]															
	A	MOTOR FRAME	B	C	D	E	F	G	H	J	K	L	M	N	P	R
GHC D	1"	56C	2.50 [64] †	2.00 [51]	3.50 [89] ✳	5.19 [1321]	4.41 [112]	13.00 [330]	15.00 [381]	.56 [14]	.62 [16]	3.00 [76]	25.50 [648]	20.35 [517]	31.50 [800]	2.66 [68]
		143TC/145TC	2.75 [70] ✳													
		182TC/184TC	3.19 [81] ⊢ †		4.50 [114]		5.50 [140]	14.63 [372]	16.63 [422]	.56 [14]	.62 [16]	3.00 [76]	37.25 [946]	27.05 [687]	43.25 [1099]	
		213TC/215TC	4.00 [82] ⊢													
GHC G	1- ½"	56C	3.50 [89] †	2.00 [51]	3.50 [89] ✳	6.00 [152]	4.41 [112]	13.00 [330]	15.00 [381]	.56 [14]	.62 [16]	3.00 [76]	25.50 [648]	22.66 [576]	31.50 [800]	3.27 [83]
		143TC/145TC														
		182TC/184TC	3.75 [95] ✳		4.50 [114]											
	2"	213TC/215TC	4.00 [102] ⊢		3.25 [83]		5.50 [140]	14.63 [372]	16.63 [422]	.56 [14]	.62 [16]	3.00 [76]	37.25 [946]	29.35 [735]	43.25 [1099]	
GHC J	2"	182TC/184TC	4.50 [114] †	2.00 [51]	4.50 [114]	9.06 [230]	5.50 [140]	14.63 [372]	16.63 [422]	.69 [18]	1.12 [28]	3.00 [76]	37.25 [946]	32.42 [823]	43.25 [1099]	4.56 [116]
	2- ½"		5.00 [127] ✳													
		213TC/215TC	6.00 [152] ⊢		5.25 [133] ✳											
	3"		6.31 [160] ⊢ †													

✳ STANDARD DIMENSION

⊢ PORTS ARE COMPATIBLE WITH 125# OR 250# ANSI CAST IRON FLANGES. ALL OTHER PORTS ARE TAPPED NPT FOR ANSI PIPE. OPTIONAL (DIN) FLANGES OR TAPPED (BSP) PORTS AVAILABLE FOR EXPORT MARKET.

† 90° HOUSING

© 2010 The Gorman-Rupp Company

GHC

GRR REDUCER C-FLANGE FLEX DRIVE OPTIONS

(Drive Assy Number Includes Base, Coupling, Guard & Gear Reducer, But **NOT** the Motor)

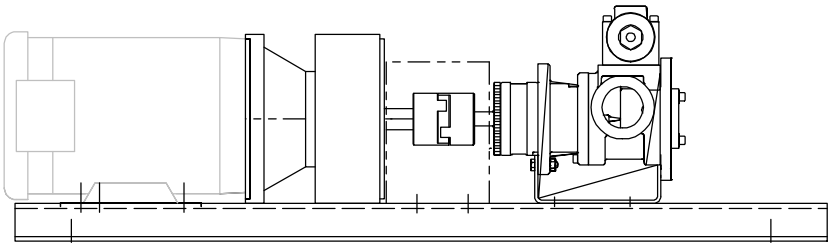

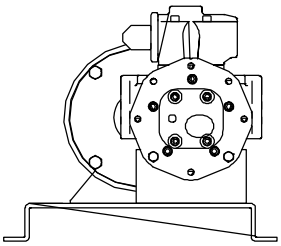

PUMP MODEL	RPM @ 1750	RPM @ 1150	REDUCER (1) RATIO	REDUCER (1) MAX HP @ 1750	REDUCER (1) MAX HP @ 1150	FRAME	MTG.FT. OPTION REQ.	DRIVE ASSY NO.
GHC D	875	575	2.00:1	6.00	3.96	56C	STD	90353–510
				6.00	3.96	143TC/145TC	STD	90353–516
				6.00	3.96	182C/184C	80F	90353–519
				20.00	13.2	182TC/184TC	80F	90353–526
	580	383	3.00:1	4.21	2.78	56C	STD	90353–530
				8.10	5.35	143TC/145TC	STD	90353–536
				8.10	5.35	182C/184C	80F	90353–539
				12.98	8.57	182TC/184TC	80F	90353–546
	440	288	4.00:1	3.63	2.39	56C	STD	90353–550
				5.90	3.89	143TC/145TC	STD	90353–556
				5.90	3.89	182C/184C	80F	90353–564
				11.35	7.49	56C	STD	90353–568
	350	230	5.00:1	3.00	1.98	143TC/145TC	STD	90353–570
				3.00	1.98	182C/182C	80F	90353–573
				5.90	3.89	182TC/184TC	80F	90353–579
				10.07	6.65	182TC/184TC	80F	90353–586

(CONT'D)

(1) **Listed reducer horsepower rated for Standard Service (8–10 hrs/day). For Light Service (3–5 hrs/day) multiply maximum rated horsepower by 1.1. For Heavy Service (16–24 hrs/day) multiply maximum rated horsepower by 0.9.**

NOTE: CONSULT FACTORY FOR;
HORSEPOWERS & FRAMES NOT SHOWN
DRIP PAN BASES

©2010 The Gorman-Rupp Company

GHC

GRR REDUCER C-FLANGE FLEX DRIVE OPTIONS

(Drive Assy Number Includes Base, Coupling, Guard & Gear Reducer, But **NOT** the Motor)

PUMP MODEL	RPM @ 1750	RPM @ 1150	REDUCER (1) RATIO	MAX HP @ 1750	MAX HP @ 1150	FRAME	MTG.FT. OPTION REQ.	DRIVE ASSY NO.
GHC G	875	575	2.00:1	5.65	3.73	56C	STD	90353–610
				11.70	7.72	143TC/145TC	STD	90353–619
				11.70	7.72	182C/184C	80F	90353–622
				13.01	8.59	182TC/184TC	80F	90353–625
				13.01	8.59	213TC/215TC	80J	90353–627
	580	383	3.00:1	3.76	2.48	56C	STD	90353–630
				8.10	5.35	143TC/145TC	STD	90353–633
				8.10	5.35	182C/184C	80F	90353–642
				10.62	7.01	182TC/184TC	80F	90353–646
				10.62	7.01	213TC/215TC	80J	90353–648
	440	288	4.00:1	2.82	1.86	56C	STD	90353–660
				5.90	3.89	143TC/145TC	STD	90353–663
				5.90	3.89	182C/184C	80F	90353–672
				7.24	4.78	182TC/184TC	80F	90353–675
				7.24	4.78	213TC	80J	90353–677
	350	230	5.00:1	2.26	1.49	56C	STD	90353–690
				5.20	3.43	143TC/145TC	STD	90353–699
				5.20	3.43	182C/184C	80F	90353–702
				5.98	3.95	182TC/184TC	80F	90353–706
				5.98	3.95	213TC	80J	90353–708
GHC J	875	575	2.00:1	13.01	8.59	182TC/184TC	80F	90353–720
				13.01	8.59	213TC/215TC	80J	90353–724
				36.29	23.95	254TC/256TC	80P	90353–728
				36.29	23.95	284TC/286TC	80P	90353–732
	580	383	3.00:1	10.62	7.01	182TC/184TC	80F	90353–735
				10.62	7.01	213TC/215TC	80J	90353–739
	555	365	3.15:1	25.76	17.00	254TC/256TC	80P	90353–743
				25.76	17.00	284TC	80P	90353–746
				42.96	28.35	286TC	80P	90353–747
	440	288	4.00:1	7.24	4.78	182TC/184TC	80F	90353–750
				7.24	4.78	213TC	80J	90353–754
	350	230	5.00:1	5.98	3.95	182TC/184TC	80F	90353–765
				5.98	3.95	213TC	80J	90353–769
				16.01	10.57	215TC	80P	90353–774
				16.01	10.57	254TC	80P	90353–778
				30.49	20.12	356TC	80P	90353–780

(1) **Listed reducer horsepower rated for Standard Service (8–10 hrs/day). For Light Service (3–5 hrs/day) multiply maximum rated horsepower by 1.1. For Heavy Service (16–24 hrs/day) multiply maximum rated horsepower by 0.9.**

NOTE: CONSULT FACTORY FOR;
HORSEPOWERS & FRAMES NOT SHOWN
DRIP PAN BASES

©2010 The Gorman-Rupp Company

GORMAN-RUPP
ROTARY GEAR PUMPS

PERFORMANCE CURVES

SPEED VS. CAPACITY/HORSEPOWER

JP Hydraulic Size

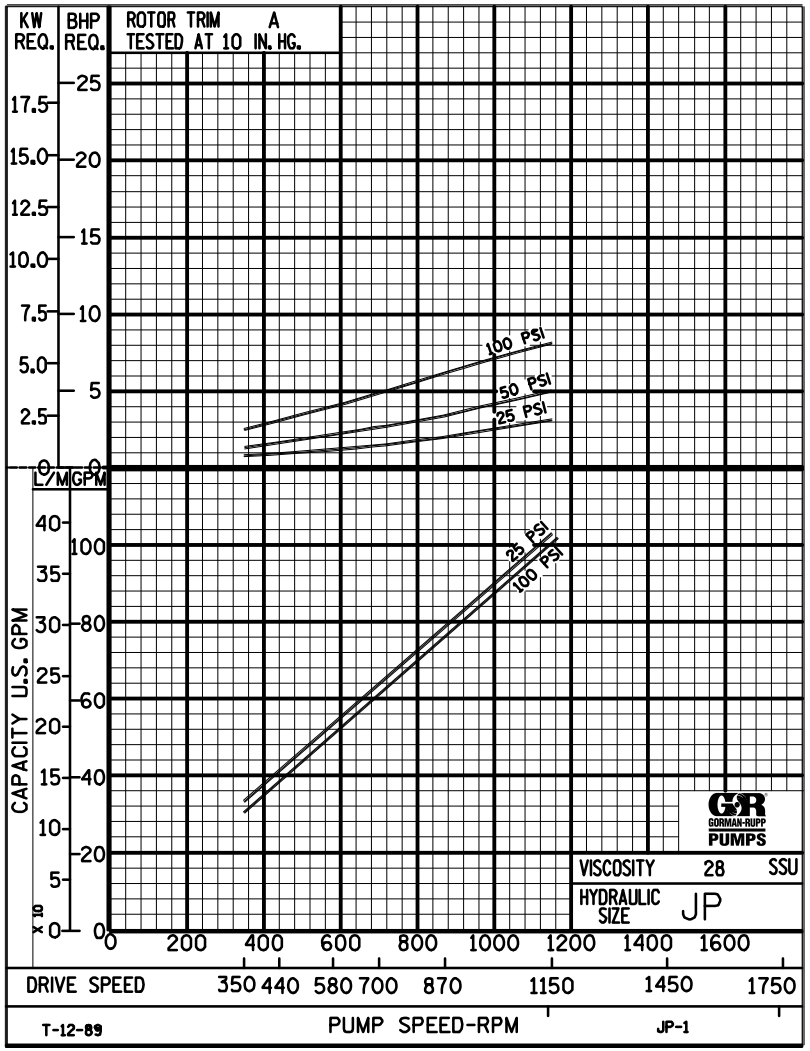

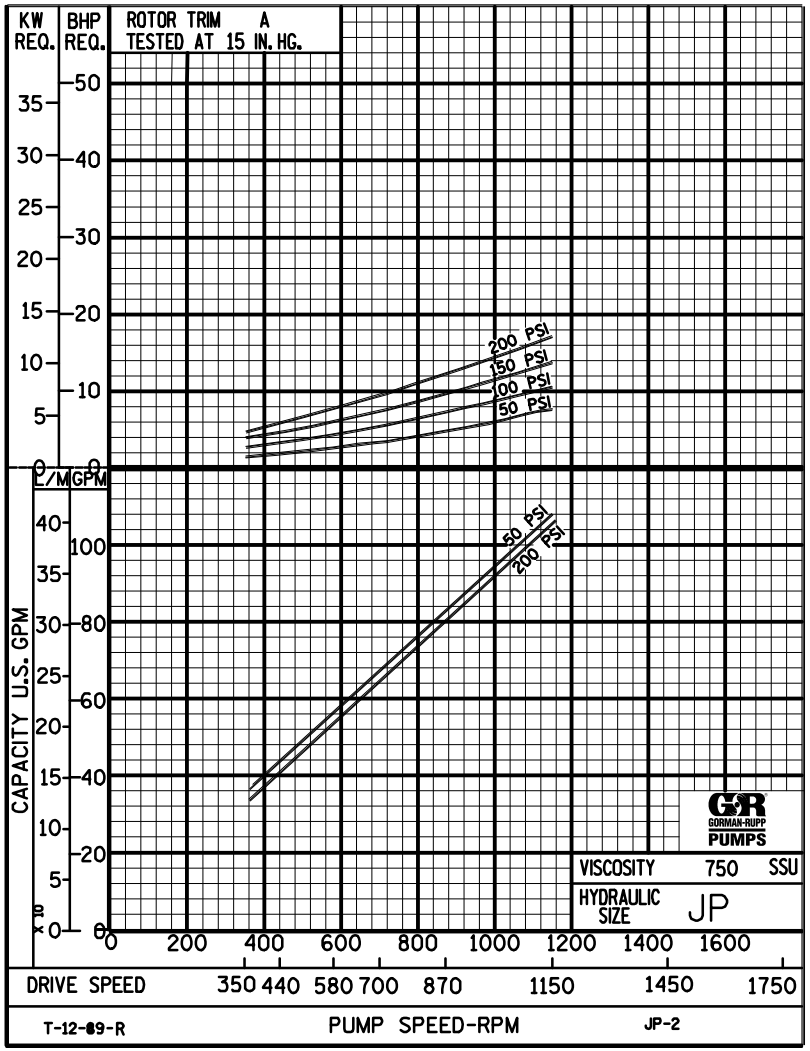

©2010 The Gorman-Rupp Company

GORMAN-RUPP
ROTARY GEAR PUMPS

PERFORMANCE CURVES

SPEED VS. CAPACITY/HORSEPOWER

JP Hydraulic Size

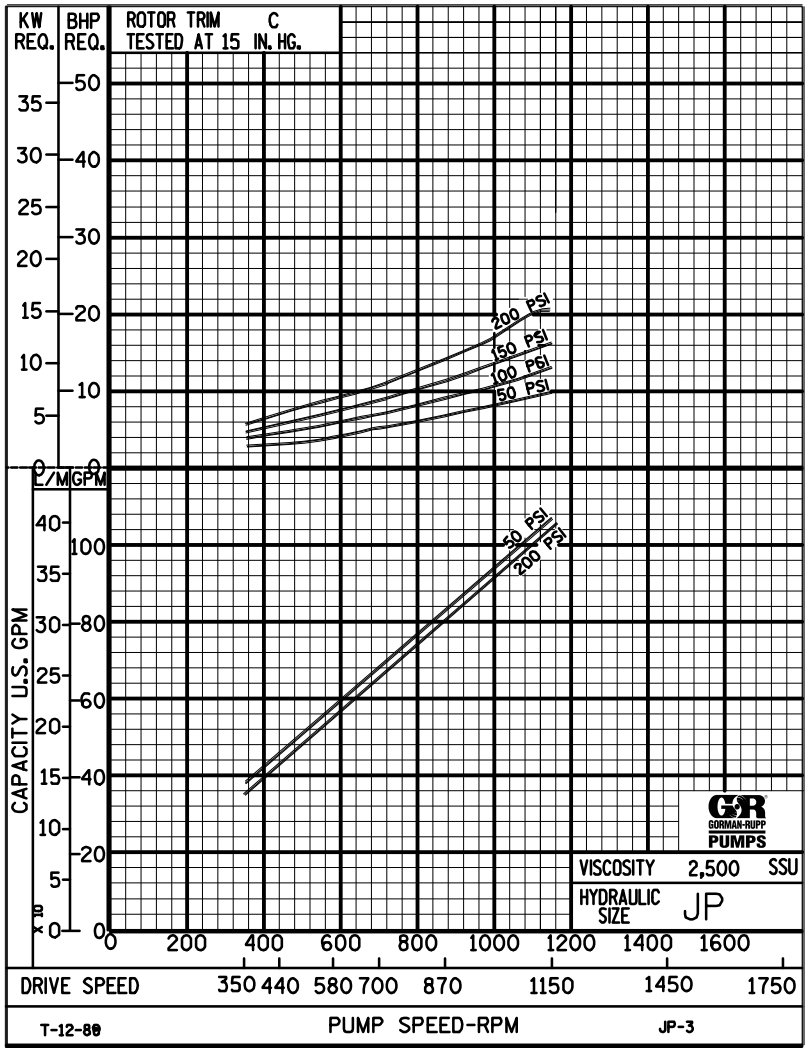

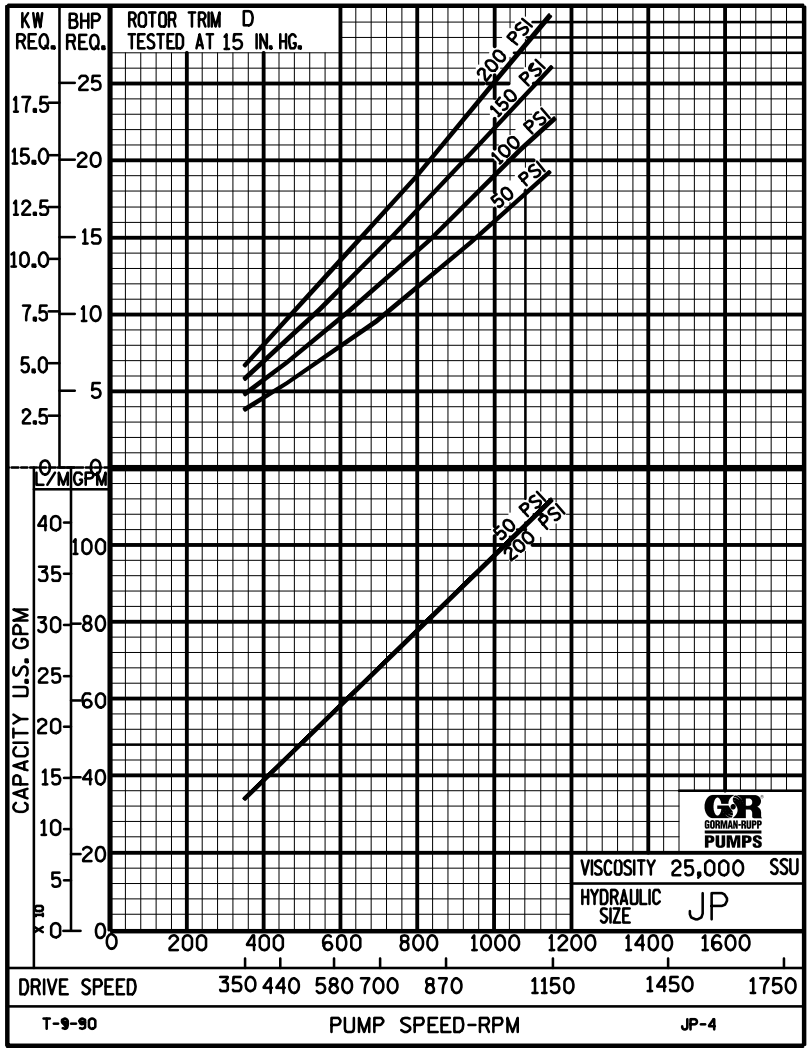

©2010 The Gorman-Rupp Company

GORMAN-RUPP
ROTARY GEAR PUMPS

JP

PUMP HYDRAULIC SIZE CHART

107 GPM
1150 RPM

NOMINAL CAP. GPM	NOMINAL SPEED RPM	ROTOR TRIM	VISCOSITY (SSU)	N.I.P.R. (PSIA)	FRICTION PIPE LOSS (PSI/FT) (Based on Sch 40 Steel Pipe) PIPE DIAMETER 1½"	2"	2½"	3"	4"	FULL BYPASS RELIEF VALVE PRESSURE (PSI) CRACKING PRESS. (PSI) LOW PRES R/V 50	75	100	HI PRES R/V 150	200	CAPACITY (GPM) / H.P. REQUIRED DIFFERENTIAL PRESSURE (PSI) HEAVY DUTY 25	50	75	100	150	200	300	400
107	1150	STD	28	4.8	.01	.01	.01	.01	.01	77	104	143			103	100	100	99				
			32		.23	.07	.03	.01	.01						3.2	5.0	6.3	8.1				
			38	4.8	.29	.09	.04	.02	.01	78	105	144	188		105	103	102	101	100			
			50		.34	.11	.05	.02	.01						3.5	5.5	6.8	8.6	12			
			70	4.8	.39	.12	.05	.02	.01	79	107	144	189	240	106	105	104	103	102	101		
			100		.44	.14	.06	.02	.01						3.8	6.0	7.4	9.1	13	16		
			150	4.8	.50	.15	.07	.03	.01	80	107	145	189	241	108	106	106	105	104	103		
			200		.54	.17	.07	.03	.01						4.1	6.5	8.0	9.6	13	16		
			300	4.8	.61	.19	.08	.03	.01	81	109	145	190	242	109	108	107	107	106	105		
			500		.64	.22	.09	.04	.01						4.4	7.1	8.5	10	14	17		
			750	4.8	.70	.26	.13	.06	.02	82	111	146	190	243	109	109	108	108	108	107		
			1,000		.94	.35	.17	.07	.03						4.7	7.6	9.1	11	14	17		
			2,000	5.7	1.87	.69	.34	.14	.05	86	118	153	196	252	109	109	109	108	108	108		
		"C"	3,500		3.28	1.21	.59	.25	.09						6.1	9.9	12	13	16	20		
			5,000	6.2	4.68	1.73	.85	.36	.12	90	123	156	200	256	110	110	109	109	109	109		
			7,500		7.02	2.59	1.27	.54	.18						9.9	13	15	16	20	23		
			10,000	6.8	9.36	3.45	1.70	.71	.24	96	129	160	204	260	110	110	110	109	109	109		
			15,000		14.1	5.17	2.54	1.07	.36						14	16	18	19	23	26		
			20,000	7.3	18.7	6.89	3.39	1.42	.48	102	135	164	208	264	111	110	110	110	109	109		
		"D"	25,000		23.4	8.62	4.23	1.78	.60						18	19	21	23	26	30		
			50,000																			
			75,000																			
			100,000																			
			150,000																			
			200,000																			
			250,000																			

(NOTE) For speeds not shown on the pump hydraulic charts, consult factory.

©2010 The Gorman-Rupp Company

GORMAN-RUPP
ROTARY GEAR PUMPS

JP

PUMP HYDRAULIC SIZE CHART

81 GPM
870 RPM

NOMINAL CAP. GPM	NOMINAL SPEED RPM	ROTOR TRIM	VISCOSITY (SSU)	N.I.P.R. (PSIA)	FRICTION PIPE LOSS (PSI/FT) (Based on Sch 40 Steel Pipe) PIPE DIAMETER 1½"	2"	2½"	3"	4"	FULL BYPASS RELIEF VALVE PRESSURE (PSI) CRACKING PRESS. (PSI) LOW PRES R/V 50	75	100	HI PRES R/V 150	200	CAPACITY (GPM) / H.P. REQUIRED DIFFERENTIAL PRESSURE (PSI) 25	50	75	100	150	200	300	400
															MEDIUM DUTY AND HEAVY DUTY					HEAVY DUTY ONLY		
81	870	STD	28	3.0	.01	.01	.01	.01	.01	74	100	133			77	75	75	74				
			32		.14	.04	.02	.01	.01						2.2	3.4	4.7	6.0				
			38	3.0	.18	.06	.03	.01	.01	74	100	133	174		78	77	76	75	75			
			50		.21	.07	.03	.01	.01						2.3	3.7	5.0	6.2	7.5			
			70	3.0	.24	.08	.03	.01	.01	74	101	134	174	226	79	78	78	77	76	75		
			100		.27	.09	.04	.02	.01						2.5	4.0	5.2	6.5	8.0	10		
			150	3.0	.31	.10	.04	.02	.01	75	101	134	175	226	81	79	79	78	78	77		
			200		.34	.11	.05	.02	.01						2.6	4.3	5.5	6.8	8.6	11		
			300	3.0	.38	.12	.05	.02	.01	75	102	135	175	227	81	81	80	79	79	78		
			500		.44	.13	.07	.03	.01						2.8	4.5	5.8	7.0	9.2	12		
			750	3.0	.53	.20	.10	.04	.02	75	102	135	175	227	82	81	81	80	80.5	80		
			1,000		.71	.26	.13	.06	.02						3.0	4.8	6.0	7.3	9.7	12		
			2,000	3.7	1.42	.52	.26	.11	.04	76	104	137	177	229	82	82	81	81	81	81		
		"C"	3,500		2.48	.92	.45	.19	.07						4.2	6.8	7.9	9.0	12	14		
			5,000	4.2	3.55	1.31	.64	.27	.09	80	109	139	179	231	83	83	82	82	82	82		
			7,500		5.32	1.96	.96	.41	.14						6.8	9.0	10	11	14	16		
			10,000	4.6	7.09	2.61	1.28	.54	.18	84	114	143	183	235	84	84	83	83	83	82		
			15,000		10.7	3.92	1.92	.81	.27						9.3	11	12	14	16	19		
			20,000	5.0	14.2	5.22	2.57	1.08	.37	89	120	149	187	241	85	84	84	84	84	83		
		"D"	25,000		17.7	6.52	3.21	1.35	.46						12	13	14	16	18	21		
			50,000	7.6	35.5	13.1	6.41	2.69	.91	95	126	155	193	247	85	84	84	84	84	83		
			75,000		–	–	–	–	–						17	18	21	23	24	27		
			100,000																			
			150,000																			
			200,000																			
			250,000																			

(NOTE) For speeds not shown on the pump hydraulic charts, consult factory.

©2010 The Gorman-Rupp Company

GORMAN-RUPP
ROTARY GEAR PUMPS

JP

PUMP HYDRAULIC SIZE CHART

54 GPM
580 RPM

NOMINAL CAP. GPM	NOMINAL SPEED RPM	ROTOR TRIM	VISCOSITY (SSU)	N.I.P.R. (PSIA)	FRICTION PIPE LOSS (PSI/FT) (Based on Sch 40 Steel Pipe) PIPE DIAMETER 1½"	2"	2½"	3"	4"	FULL BYPASS RELIEF VALVE PRESSURE (PSI) CRACKING PRESS. (PSI) LOW PRES R/V 50	75	100	HI PRES R/V 150	200	CAPACITY (GPM) / H.P. REQUIRED DIFFERENTIAL PRESSURE (PSI) MEDIUM DUTY AND HEAVY DUTY 25	50	75	100	150	HEAVY DUTY ONLY 200	300	400
54	580	STD	28	1.9	.01	.01	.01	.01	.01	62	87	114			51	50	50	49				
			32		.07	.02	.01	.01	.01						1.5	2.3	3.1	4.0				
			38	1.9	.09	.03	.01	.01	.01	62	89	116	166		52	51	51	50	50			
			50		.10	.03	.02	.01	.01						1.6	2.5	3.3	4.2	5.0			
			70	1.9	.12	.04	.02	.01	.01	63	90	118	167	219	53	52	52	51	51	50		
			100		.14	.04	.02	.01	.01						1.7	2.7	3.5	4.4	5.4	6.9		
			150	1.9	.16	.05	.02	.01	.01	64	91	120	167	219	54	53	53	52	52	51		
			200		.17	.05	.02	.01	.01						1.8	2.9	3.7	4.5	5.8	7.3		
			300	1.9	.19	.06	.03	.01	.01	65	92	122	168	220	54	54	53	53	53	52		
			500		.24	.09	.05	.02	.01						1.9	3.0	3.9	4.7	6.2	7.8		
			750	1.9	.36	.13	.07	.03	.01	66	93	124	168	220	54	54	54	54	54	53		
			1,000		.47	.18	.09	.04	.01						2.0	3.2	4.0	4.9	6.5	8.2		
			2,000	2.6	.95	.35	.17	.07	.03	70	95	124	168	222	55	55	54	54	54	54		
		"C"	3,500		1.66	.61	.30	.13	.04						2.8	4.6	5.3	6.1	7.8	9.5		
			5,000	3.0	2.36	.87	.43	.18	.06	72	97	126	170	224	55	55	55	55	55	54		
			7,500		3.55	1.31	.64	.27	.09						4.6	6.0	6.8	7.6	9.3	11		
			10,000	3.5	4.73	1.74	.86	.36	.12	74	99	128	172	226	56	56	56	55	55	55		
			15,000		7.09	2.61	1.28	.54	.18						6.3	7.4	8.2	9.1	11	13		
			20,000	3.9	9.45	3.48	1.71	.72	.24	78	103	128	174	226	57	56	56	56	56	56		
		"D"	25,000		11.8	4.35	2.14	.90	.30						8.0	8.9	9.6	11	12	14		
			50,000	6.1	23.6	8.70	4.27	1.79	.61	82	107	132	178	230	57	56	56	56	56	56		
			75,000		35.5	13.1	6.41	2.69	.91						11	12	14	16	16	18		
			100,000																			
			150,000																			
			200,000																			
			250,000																			

(NOTE) For speeds not shown on the pump hydraulic charts, consult factory.

©2010 The Gorman-Rupp Company

GORMAN-RUPP
ROTARY GEAR PUMPS

JP

PUMP HYDRAULIC SIZE CHART

32 GPM
350 RPM

NOMINAL CAP. GPM	NOMINAL SPEED RPM	ROTOR TRIM	VISCOSITY (SSU)	N.I.P.R. (PSIA)	FRICTION PIPE LOSS (PSI/FT) (Based on Sch 40 Steel Pipe) PIPE DIAMETER 1½"	2"	2½"	3"	4"	FULL BYPASS RELIEF VALVE PRESSURE (PSI) CRACKING PRESS. (PSI) LOW PRES R/V 50	75	100	HI PRES R/V 150	200	CAPACITY (GPM) / H.P. REQUIRED DIFFERENTIAL PRESSURE (PSI) 25	50	75	100	150	200	300	400
															MEDIUM DUTY AND HEAVY DUTY					HEAVY DUTY ONLY		
32	350	STD	28	1.3	.01	.01	.01	.01	.01	56	82	113			31	30	30	29				
			32		.03	.01	.01	.01	.01						.89	1.4	1.9	2.4				
			38	1.3	.04	.01	.01	.01	.01	56	82	113	159		31	31	30	30	30			
			50		.04	.02	.01	.01	.01						.94	1.5	2.0	2.5	3.0			
			70	1.3	.05	.02	.01	.01	.01	56	83	113	159	211	32	31	31	31	30.7	30.4		
			100		.06	.02	.01	.01	.01						1.0	1.6	2.1	2.6	3.2	4.1		
			150	1.3	.06	.02	.01	.01	.01	56	83	113	159	211	32	32	31	31	31	31		
			200		.06	.02	.01	.01	.01						1.1	1.7	2.2	2.7	3.5	4.4		
			300	1.3	.09	.03	.02	.01	.01	57	84	113	159	211	32	32	32	32	32	31		
			500		.14	.05	.03	.01	.01						1.1	1.8	2.3	2.8	3.7	4.7		
			750	1.3	.21	.08	.04	.02	.01	57	84	113	159	211	32	32	32	32	32	32		
			1,000		.28	.11	.05	.02	.01						1.2	1.9	2.4	2.9	3.9	5.0		
			2,000	2.0	.56	.21	.10	.04	.02	59	86	115	159	211	33	33	32	32	32	32		
		"C"	3,500		.98	.36	.18	.08	.03						1.7	2.7	3.2	3.6	4.7	5.7		
			5,000	2.4	1.40	.52	.26	.11	.04	61	88	117	160	212	33	33	33	33	33	32		
			7,500		2.10	.78	.38	.16	.06						2.7	3.6	4.1	4.5	5.6	6.6		
			10,000	2.9	2.80	1.03	.51	.21	.07	63	90	120	161	213	33	33	33	33	33	33		
			15,000		4.20	1.55	.76	.32	.11						3.8	4.5	4.9	5.4	6.5	7.5		
			20,000	3.2	5.60	2.06	1.02	.43	.15	66	93	123	161	213	34	34	34	33	33	33		
		"D"	25,000		7.00	2.58	1.27	.53	.18						4.8	5.3	5.8	6.3	7.4	8.4		
			50,000	5.4	14.0	5.16	2.53	1.06	.36	69	96	126	164	216	34	34	34	33	33	33		
			75,000		21.0	7.73	3.80	1.60	.54						6.7	7.3	8.2	9.4	9.8	11		
			100,000	8.0	28.0	10.3	5.07	2.13	.72	73	100	130	168	220	34	34	34	33	33	33		
			150,000		42.0	15.5	7.60	3.19	1.08						8.1	8.8	10	11	12	13		
			200,000																			
			250,000																			

(NOTE) For speeds not shown on the pump hydraulic charts, consult factory.

©2010 The Gorman-Rupp Company