GORMAN-RUPP
ROTARY GEAR PUMPS

# GHC SERIES
# HEAVY DUTY COMPACT
# ROTARY GEAR PUMP

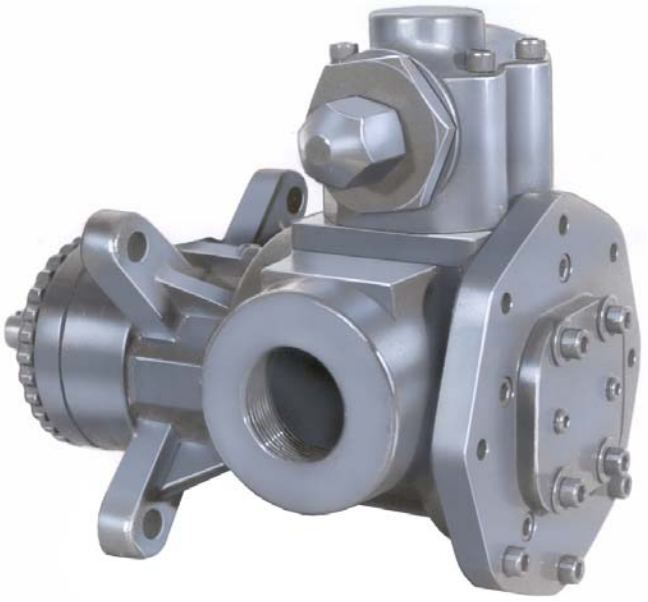

SHOWN AS FLANGE MOUNT

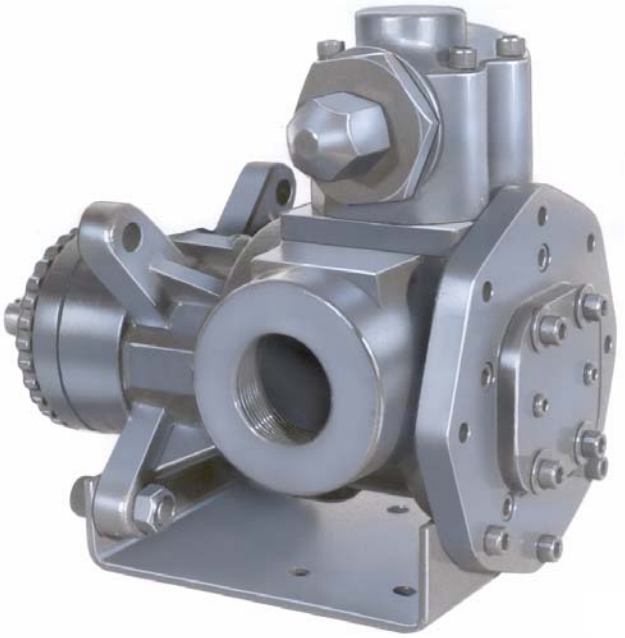

SHOWN WITH FOOT BRACKET

The GHC iron series is designed for applications in the operating ranges noted below. These units are available with head jackets for temperature control, carbon graphite bushings for low viscosity liquids, silicon carbide bushings for wear resistance, and numerous shaft seal options described on the following pages.

These units may be foot mounted or, by using a motor adaptor, direct connected to NEMA "C" flange motors.

This heavy duty series provides superior rotor shaft support and an integral, maintenance-free radial/ thrust bearing for reduced deflection and wear.

## FEATURES

*300 PSI CAPABILITY*

*BALL BEARING THRUST CONTROL*

*ROTOR END CLEARANCE EXTERNALLY ADJUSTABLE*

*HIGH STRENGTH, COMPUTER PROFILED GEARING FOR QUIET OPERATION*

*C-FLANGE MOTOR ADAPTATION*

*MULTIPLE PORT POSITIONS*

## OPERATING RANGE

| | | |
|---|---|---|
| CAPACITY | (GPM): | (3 TO 107) |
| | [LPM]: | [11 TO 405] |
| PRESSURE | (PSI) : | [0 TO 300) |
| | [BAR] : | [0 TO 21] |
| VISCOSITY | (SSU): | (28 TO 250,000) |
| | [cSt] : | [1 TO 55,000] |
| TEMPERATURE | (F) : | (-60° TO 350°) |
| | [C] : | [-51° TO 177°] |

## APPLICATIONS

USE WITH ANY CLEAN LIQUID COMPATIBLE WITH CAST IRON

- ★ BOOSTER SERVICE
- ★ CIRCULATING
- ★ FILTERING
- ★ LUBRICATING
- ★ TRANSFERRING
- ★ LOW PRESSURE FLUID POWER



SUPERSEDES ALL PREVIOUS ISSUES
©2010 The Gorman-Rupp Company

# Standard Construction

| EXTERIOR | ROTOR & IDLER | HOUSING PORTS | BUSHINGS | IDLER PIN | SHAFT | SHAFT SEALING | | ROTATION | INTERNAL RELIEF VALVE | |
|---|---|---|---|---|---|---|---|---|---|---|
| | | | | | | MECH. SEAL ● | LIPSEAL ■ | | MATERIAL | SETTING |
| CAST IRON | HIGH STRENGTH IRON | 180° TAPPED | BRONZE | HARDENED STEEL | STEEL | VITON | BUNA-N | C.W. | DUCTILE IRON | 75 PSI [5 BAR] |

# Standard Models

**G H C 1 DC 3 – B**

G — GEAR; H — DUTY; C — DESIGN; 1 — PORT SIZE; DC — HYDRAULIC SIZE; 3 — SEAL; B — STYLE

| MODEL NUMBER | NOM. CAPACITY - SPEED | | | | MAXIMUM | | | | SHIPPING DATA | |
|---|---|---|---|---|---|---|---|---|---|---|
| | MAXIMUM | | ALTERNATIVE | | DIFFERENTIAL PRESSURE-PSI [BAR] | | | TEMP. | | |
| | GPM [LPM] | RPM 60 Hz [50 HZ] | GPM [LPM] | RPM ③ 60 Hz [50 Hz] | BELOW 38 SSU [4 cSt] | 38 TO 100 SSU [21 cSt] | 100 TO 250,000 SSU [55,000 cSt] | °F [°C] | Weight LBS [KG] | Volume CU. FT. |
| **GHC 1DC 3-B ● ① / GHC 1DC 4-B ■** | 9 [28] | 1750 [1460] | 6 [19] | 1150 [960] | 100 [7] | 150 [10] | 300 [21] | ● 350 [177] / ■ 225 [107] | 29 [13,2] | 0.6 |
| **GHC 1DE 3-B ● ① / GHC 1DE 4-B ■** | 11 [35] | | 7 [22] | | | | | | 30 [13,6] | 0.6 |
| **GHC 1-1/2 GC 3-B ● / GHC 1-1/2 GC 4-B ■** | 16 [50] | | 10 [32] | | | | | | 58 [26,4] | 2.9 |
| GHC 2 GC 3-B ● / GHC 2 GC 4-B ■ | | | | | | | | | 58 [26,4] | 2.9 |
| **GHC 1-1/2 GF 3-B ● / GHC 1-1/2 GF 4-B ■** | 23 [73] | | 15 [47] | | | | | | 58 [26,4] | 2.9 |
| GHC 2 GF 3-B ● / GHC 2 GF 4-B ■ | | | | | | | | | 58 [26,4] | 2.9 |
| **GHC 1-1/2 GH 3-B ● / GHC 1-1/2 GH 4-B ■** | 31 [98] | | 20 [63] | | | | | | 58 [26,4] | 2.9 |
| GHC 2 GH 3-B ● / GHC 2 GH 4-B ■ | | | | | | | | | 58 [26,4] | 2.9 |
| GHC 1-1/2 GJ 3-B ● ② / GHC 1-1/2 GJ 4-B ■ | 38 [120] | | 25 [79] | | | | 200 [14] | | 58 [26,4] | 2.9 |
| **GHC 2 GJ 3-B ● ② / GHC 2 GJ 4-B ■** | | | | | | | | | 58 [26,4] | 2.9 |
| **GHC 2 JG 3-B ● / GHC 2 JG 4-B ■** | 40 [126] | 1150 [960] | 30 [95] | 870 [725] | | | 300 [21] | | 128 [58,2] | 5.3 |
| GHC 2-1/2 JG 3-B ● / GHC 2-1/2 JG 4-B ■ | | | | | | | | | 128 [58,2] | 5.3 |
| GHC 3 JG 3-B ● / GHC 3 JG 4-B ■ | | | | | | | | | 128 [58,2] | 5.3 |

STANDARD MODELS CONTINUED

● MECHANICAL SEAL ■ LIPSEAL

**NOTE**: RECOMMENDED PORT SIZES ARE SHOWN IN **BOLDFACE**. EXAMPLE: **GHC 1 DC 3-B**

① 3450 [2875] RPM PERMISSIBLE TO 1,000 SSU [220 cSt] AND 100 PSI [7 BAR]

② PUMP LIMITED TO 200 PSI MAXIMUM PRESSURE.

③ MAXIMUM SPEED FOR AMMONIA MODELS.


©2010 The Gorman-Rupp Company

# Standard Models Cont'd

| MODEL NUMBER | NOM. CAPACITY - SPEED | | | | MAXIMUM | | | | SHIPPING DATA | |
|---|---|---|---|---|---|---|---|---|---|---|
| | MAXIMUM | | ALTERNATIVE | | DIFFERENTIAL PRESSURE-PSI [BAR] | | | TEMP. | | |
| | GPM [LPM] | RPM 60 Hz [50 HZ] | GPM [LPM] | RPM ② 60 Hz [50 Hz] | BELOW 38 SSU [4 cST] | 38 TO 100 SSU [21 cST] | 100 TO 250,000 SSU [55,000 cSt] | °F [°C] | Weight LBS [KG] | Volume CU. FT. |
| GHC 2 JJ 3-B ● GHC 2 JJ 4-B ■ | 56 [177] | 1150 [960] | 42 [133] | 870 [725] | 100 [7] | 150 [10] | 300 [21] | ● 350 [177] | 132 [60] | 5.3 |
| **GHC 2-1/2 JJ 3-B ● GHC 2-1/2 JJ 4-B ■** | | | | | | | | | 132 [60] | 5.3 |
| GHC 3 JJ 3-B ● GHC 3 JJ 4-B ■ | | | | | | | | | 132 [60] | 5.3 |
| GHC 2 JL 3-B ● GHC 2 JL 4-B ■ | 77 [243] | | 58 [183] | | | | | | 132 [60] | 5.3 |
| GHC 2-1/2 JL 3-B ● GHC 2-1/2 JL 4-B ■ | | | | | | | | | 132 [60] | 5.3 |
| **GHC 3 JL 3-B ● GHC 3 JL 4-B ■** | | | | | | | | ■ 225 [107] | 132 [60] | 5.3 |
| GHC 2 JP 3-B ● ① GHC 2 JP 4-B ■ | 107 [338] | | 81 [256] | | | | 200 [14] | | 132 [60] | 5.3 |
| GHC 2-1/2 JP 3-B ● ① GHC 2-1/2 JP 4-B ■ | | | | | | | | | 132 [60] | 5.3 |
| **GHC 3 JP 3-B ● ① GHC 3 JP 4-B ■** | | | | | | | | | 132 [60] | 5.3 |

NOTE: RECOMMENDED PORT SIZES ARE SHOWN IN **BOLDFACE**. EXAMPLE: **GHC 1 DC 3-B**

① PUMP LIMITED TO 200 PSI MAXIMUM PRESSURE.

② MAXIMUM SPEED FOR AMMONIA MODELS.



SUPERSEDES ALL PREVIOUS ISSUES
©2010 The Gorman-Rupp Company

| APPLICATION RECOMMENDATIONS: | | |
|---|---|---|
| **APPLICATION** | **OPTIONS REQUIRED (Select One from Each Row)** | **OPERATING LIMITATIONS** |
| AMMONIA | 25G, 25H, 25R, 25S, 25T<br>40N<br>60K<br>70E<br>90A | PRESSURE: 200 PSI MAX.<br>2/3 RATED SPEED.<br>4 FEET NPSHr |
| LP GAS | 25G OR 25H<br>40F OR 40N<br>70D OR 70E | PRESSURE: 200 PSI MAX.<br>3 FEET NPSHr |

NOTE: PROPER PUMP APPLICATION REQUIRES CONSIDERATION OF ADDITIONAL FACTORS. PLEASE REVIEW APPLICATION GUIDE IN SECTION 500 OR CONSULT THE FACTORY.



SUPERSEDES ALL PREVIOUS ISSUES
©2010 The Gorman-Rupp Company

# Basic Pump Dimensions

**STANDARD**

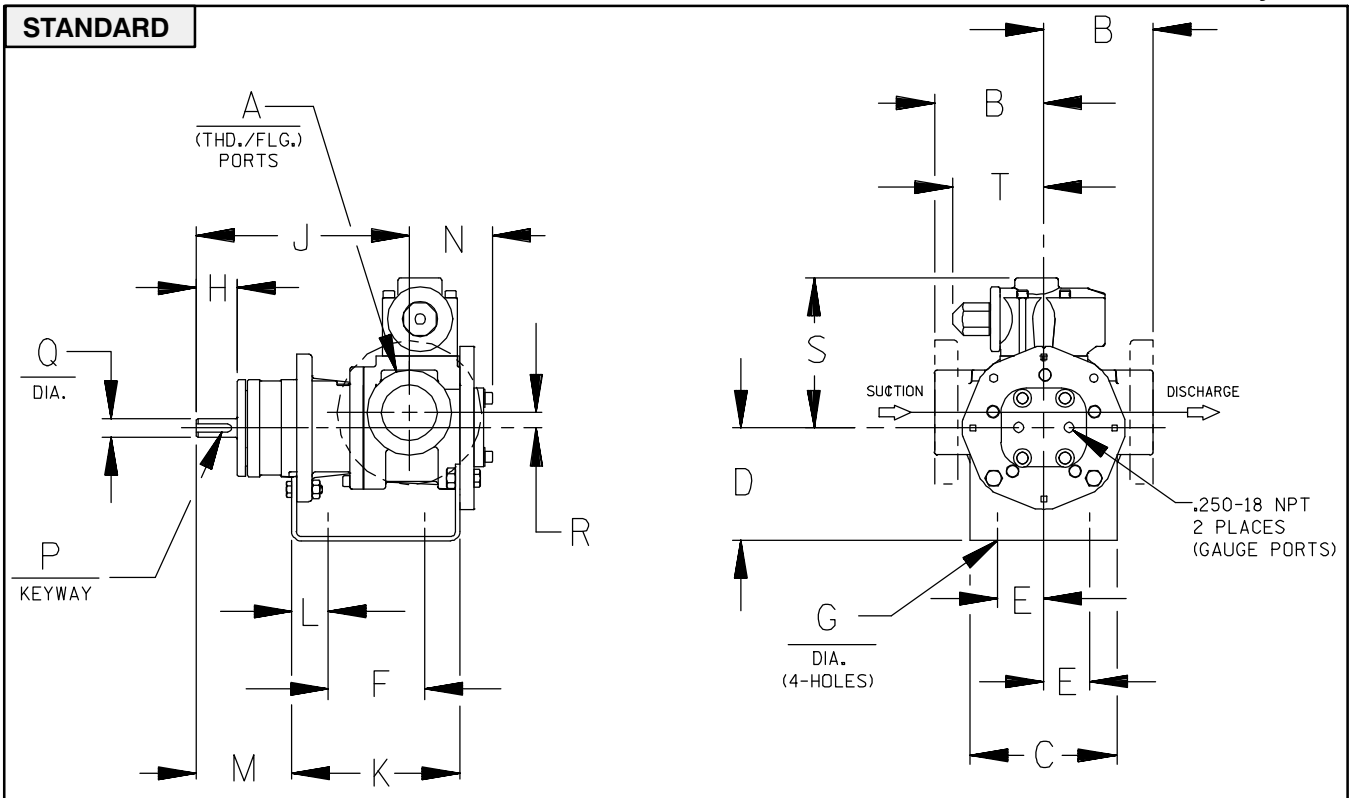


CAD FILE NO.: 16458

| MODEL NUMBERS | PUMP DIMENSIONS - INCHES [MILLIMETERS] | | | | | | | | | | | | | | | | | |
|---|---|---|---|---|---|---|---|---|---|---|---|---|---|---|---|---|---|---|
| | A | B | C | D | E | F | G | H | J | K | L | M | N | P | Q | R | S | T |
| GHC D | 1" | 2.50 [64] †<br>2.75 [70] ✳<br>3.19 [81] †<br>4.00 [102] ⊢ | 4.00 [102] | 3.50 ✳ [89]<br>4.50 [114]<br>5.25 [133] | 1.62 [41] | 3.12 [79] | .41 [10] | 1.16 [30] | 6.19 [157] | 5.04 [128] | .76 [19] | 2.62 [66] | 2.74 [70] | .12 [3] × .75 [19] | .50 [13] | .62 [16] | 5.19 [132] | 3.58 [91] |
| GHC G | 1-1/2" | 3.50 [89] †<br>3.75 [95] ✳ | 5.88 [149] | 3.50 ✳ [89]<br>4.50 [114]<br>5.25 [133] | 1.62 [41] | 4.00 [102] | .41 [10] | 1.62 | 8.50 [216] | 6.71 [170] | 1.06 [27] | 3.82 [97] | 3.35 [85] | .19 [5] × 1.25 [32] | .75 [19] | .62 [16] | 6.00 [152] | 3.62 [92] |
| | 2" | 4.00 [102] ⊢ | | 6.25 [159] | | | | | | | | | | | | | | |
| GHC J | 2" | 4.50 [114] † | 6.88 [175] | 4.50 [114]<br>5.25 [133] ✳ | 2.88 [73] | 4.25 [108] | .44 [11] | 2.50 [64] | 12.12 [308] | 9.75 [248] | 1.75 [44] | 5.50 [140] | 4.66 [118] | .25 [6] × 2.00 [51] | 1.00 [25] | 1.12 [28] | 9.06 [230] | 6.75 [171] |
| | 2-1/2" | 5.00 ✳ [127] †<br>6.00 [152] ⊢ | | 6.25 [159]<br>7.00 [178] | | | | | | | | | | | | | | |
| | 3" | 6.31 [160] † ⊢ | | 8.00 [203] | | | | | | | | | | | | | | |

✳ STANDARD DIMENSION

† 90° HOUSING

⊢ PORTS ARE COMPATIBLE WITH 125# OR 250# ANSI CAST IRON FLANGES. ALL OTHER PORTS ARE TAPPED NPT FOR ANSI PIPE. OPTIONAL (DIN) FLANGES OR TAPPED (BSP) PORTS AVAILABLE FOR EXPORT MARKET.

Continued –



SUPERSEDES ALL PREVIOUS ISSUES
©2010 The Gorman-Rupp Company

# Basic Pump Dimensions

**OPTION 80Z (SHOWN LESS FOOT)**

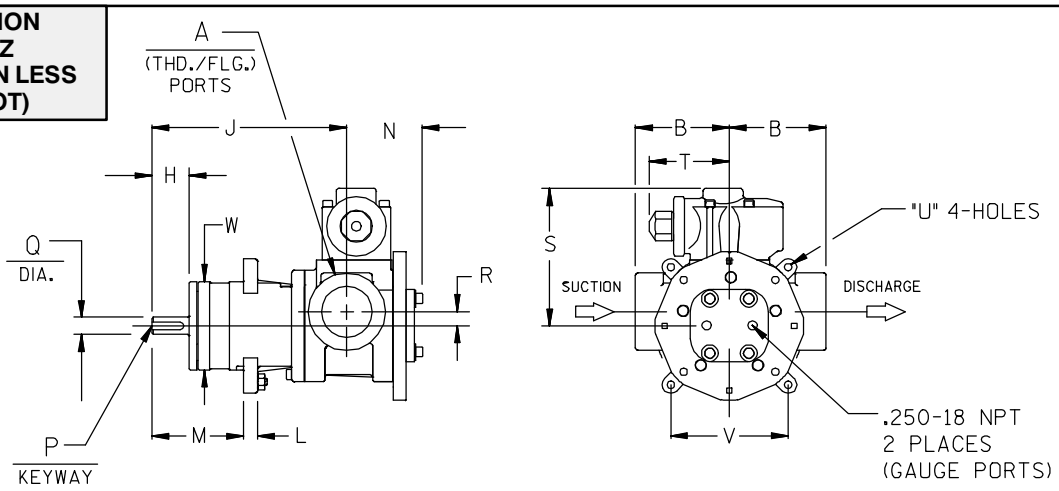


CAD FILE NO.: 16458C

| MODEL NUMBERS | PUMP DIMENSIONS - INCHES [MILLIMETERS] | | | | | | | | | | | | | | |
|---|---|---|---|---|---|---|---|---|---|---|---|---|---|---|---|
| | A | B | H | J | L | M | N | P | Q | R | S | T | U | V | W |
| GHC D | 1" | 2.50 [64] †<br>2.75 [70] ✳<br>3.19 [81] ⊢<br>4.00 [102] ⊢ | 1.16 [30] | 6.19 [157] | .44 [11] | 2.80 [71] | 2.74 [70] | .12 [3] × .75 [19] | .50 [13] | .62 [16] | 5.19 [132] | 3.58 [91] | .41 [10] | 3.00 [76] | 2.85 [72] |
| GHC G | 1-1/2" | 3.50 [89] † | 1.62 [41] | 8.50 [216] | .62 [16] | 4.00 [102] | 3.35 [85] | .19 [5] × 1.25 [32] | .75 [19] | .62 [16] | 6.00 [152] | 3.62 [92] | .53 [13] | 4.75 [121] | 3.85 [98] |
| | 2" | 3.75 [95] ✳<br>4.00 [102] ⊢ | | | | | | | | | | | | | |
| GHC J | 2" | 4.50 [114] † | 2.50 [64] | 12.12 [308] | .62 [16] | 5.75 [146] | 4.66 [118] | .25 [6] × 2.00 [51] | 1.00 [25] | 1.12 [28] | 9.06 [230] | 6.75 [171] | .53 [13] | 4.75 [121] | 4.85 [123] |
| | 2-1/2" | 5.00 [127] ✳<br>6.00 [152] ⊢ | | | | | | | | | | | | | |
| | 3" | 6.31 [160] ⊢ † | | | | | | | | | | | | | |

✳ STANDARD DIMENSION

⊢ PORTS ARE COMPATIBLE WITH 125# OR 250# ANSI CAST IRON FLANGES. ALL OTHER PORTS ARE TAPPED NPT FOR ANSI PIPE. OPTIONAL (DIN) FLANGES OR TAPPED (BSP) PORTS AVAILABLE FOR EXPORT MARKET.

† 90° HOUSING



SUPERSEDES ALL PREVIOUS ISSUES
©2010 The Gorman-Rupp Company

# GHC

## DIRECT FLEX DRIVE OPTION DIMENSIONS

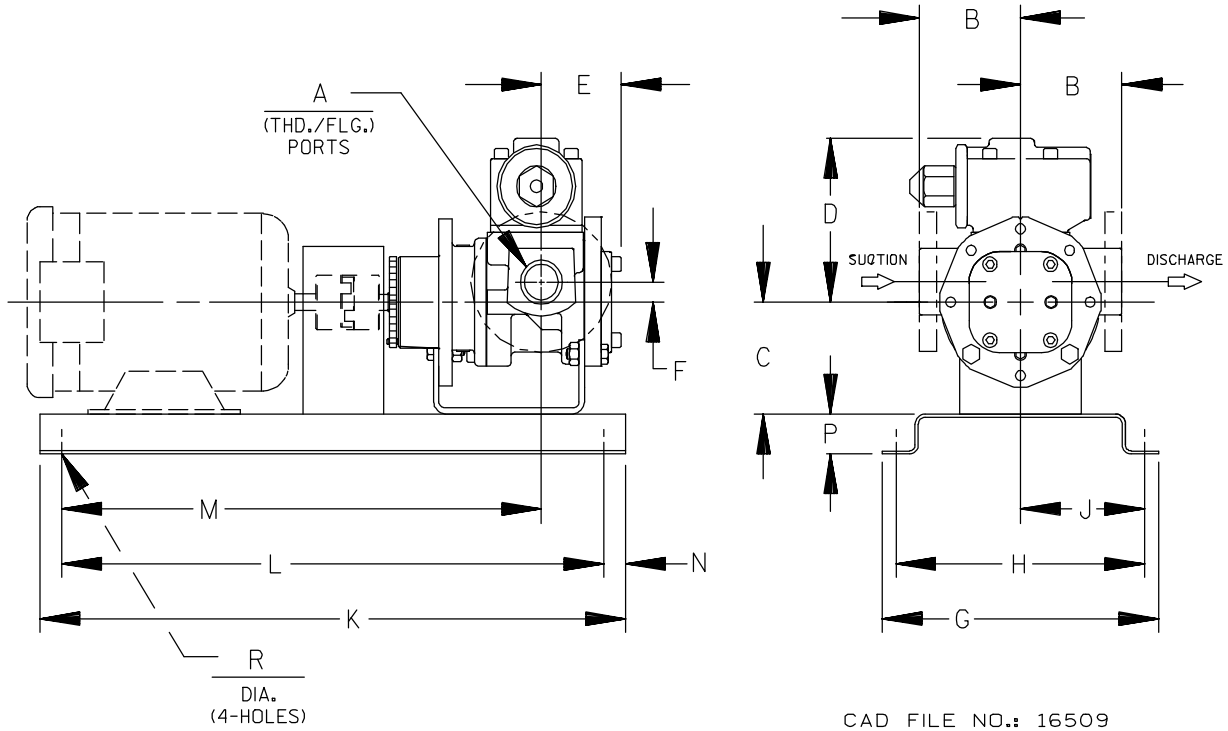


CAD FILE NO.: 16509

| PUMP MODEL | PUMP DIMENSIONS - INCHES[MILLIMETERS] | | | | | | | | | | | | | | | |
|---|---|---|---|---|---|---|---|---|---|---|---|---|---|---|---|---|
| | A | MOTOR FRAME | B | C | D | E | F | G | H | J | K | L | M | N | P | R |
| GHC D | 1" | 56/56 H | 2.50 † [64] | 3.50 ✳ [89] | 5.19 [132] | 2.73 [68] | .62 [16] | 10.14 [258] | 8.88 [226] | 4.44 [113] | 25.25 [641] | 19.25 [489] | 20.50 [521] | 3.00 [76] | 2.00 [51] | .50 [14] |
| | | 143T/145T | 2.75 ✳ [70] | | | | | | | | | | | | | |
| | | 182T/184T | 3.19 ⊢† [81] | 4.50 [114] | | | | 17.50 [445] | 15.50 [394] | 7.75 [197] | 33.50 [851] | 23.50 [597] | 26.87 [682] | 5.00 [127] | 4.00 [102] | |
| | | 213T/215T | 4.00 ⊢ [82] | 5.25 [133] | | | | | | | | | | | | |
| GHC G | 1- ½" | 50/50H | 3.50 † [89] | 3.50 ✳ [89] | 6.00 [152] | 3.35 [85] | .62 [16] | 10.14 [258] | 8.88 [226] | 4.44 [113] | 25.25 [641] | 19.25 [489] | 20.38 [518] | 3.00 [76] | 2.00 [51] | .56 [14] |
| | | 182T/184T | 3.75 ✳ [95] | 4.50 [114] | | | | | | | | | | | | |
| | | 213T/215T | 4.00 ⊢ [102] | 5.25 [133] | | | | | | 7.75 [197] | 33.50 [851] | 23.50 [597] | 26.75 [679] | 5.00 [127] | 4.00 [102] | |
| | 2" | 254T/256T | | 6.25 [159] | | | | 17.50 [445] | 15.50 [394] | | | | | | | |
| GHC J | 2" | 182T/184T | 4.50 † [114] | 4.50 [114] | 9.06 [230] | 4.66 [118] | 1.12 [28] | 21.00 [533] | 19.00 [483] | 9.50 [241] | 45.50 [1156] | 35.50 [902] | 38.38 [975] | 5.00 [127] | 4.00 [102] | .69 [18] |
| | | 213T/215T | 5.00 ✳ [127] | 5.25 [133] ✳ | | | | | | | | | | | | |
| | 2- ½" | 254T/256T | | 6.25 [159] | | | | | | | | | | | | |
| | | 284T/286T | 6.00 ⊢ [152] | 7.00 [178] | | | | | | | | | | | | |
| | 3" | 324T/326T | 6.31 ⊢ [160]† | 8.00 [203] | | | | | | | | | | | | |

✳ STANDARD DIMENSION

† 90° HOUSING

⊢ PORTS ARE COMPATIBLE WITH 125# OR 250# ANSI CAST IRON FLANGES. ALL OTHER PORTS ARE TAPPED NPT FOR ANSI PIPE. OPTIONAL (DIN) FLANGES OR TAPPED (BSP) PORTS AVAILABLE FOR EXPORT MARKET.

**NOTE: CONSULT FACTORY FOR;**

1. **HORSEPOWERS & FRAMES NOT SHOWN**
2. **DRIP PAN BASES**

**REFERENCE: PUMP FOOT BRACKET OPTIONS**

| MOTOR FRAME | CENTER HEIGHT | PUMP OPTION |
|---|---|---|
| 56, 143T, 145T | 3.50" | 80C (STD. "D/G") |
| 182, 182T, 184, 184T | 4.50" | 80F |
| 213, 213T, 215, 215T | 5.25" | 80J (STD. "J") |
| 254T, 254U, 256T, 256U | 6.25" | 80P |
| 284T, 284U, 286T, 286U | 7.00" | 80S |

©2010 The Gorman-Rupp Company

# GHC

## DIRECT FLEX DRIVE OPTIONS

(Drive Assembly Number Includes Base, Coupling & Guard, But **NOT** the Motor)

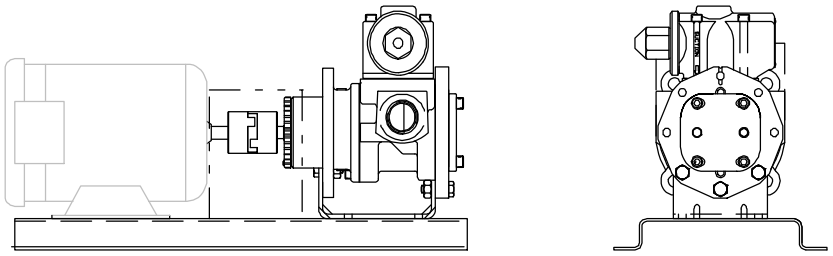

| PUMP MODEL NUMBER | 60 Hz RPM | 50 Hz RPM | FRAME | MTG. FT. OPTION REQ. | DRIVE ASSY NO. |
|---|---|---|---|---|---|
| GHC D | 3450<br>1750<br>1150<br>850 | 2900<br>1450<br>950<br>700 | 56/56H | STD | 90351–086 |
| | | | 143T/145T | STD | 90351–052 |
| | | | 184 | 80F | 90351–089 |
| | | | 182T/184T | 80F | 90351–090 |
| | | | 213T/215T | 80J | 90351–094 |
| GHC G | 1750<br>1150<br>850 | 1450<br>950<br>700 | 56/56H | STD | 90351–156 |
| | | | 143T/145T | STD | 90351–162 |
| | | | 182T/184T | 80F | 90351–168 |
| | | | 213T/215T | 80J | 90351–206 |
| | | | 213T/215T | 80J | 90351–172 |
| | | | 254T | 80P | 90351–180 |
| GHC J | 1150<br>850 | 950<br>700 | 182T/184T | 80F | 90351–260 |
| | | | 213T/215T | STD | 90351–268 |
| | | | 254T/256T | 80P | 90351–276 |
| | | | 284T/286T | 80S | 90351–280 |

**NOTE: CONSULT FACTORY FOR;**
**HORSEPOWERS & FRAMES NOT SHOWN**
**DRIP PAN BASES**

©2010 The Gorman-Rupp Company

# GHC

## DIRECT FLEX C-FLANGE DRIVE OPTION DIMENSIONS

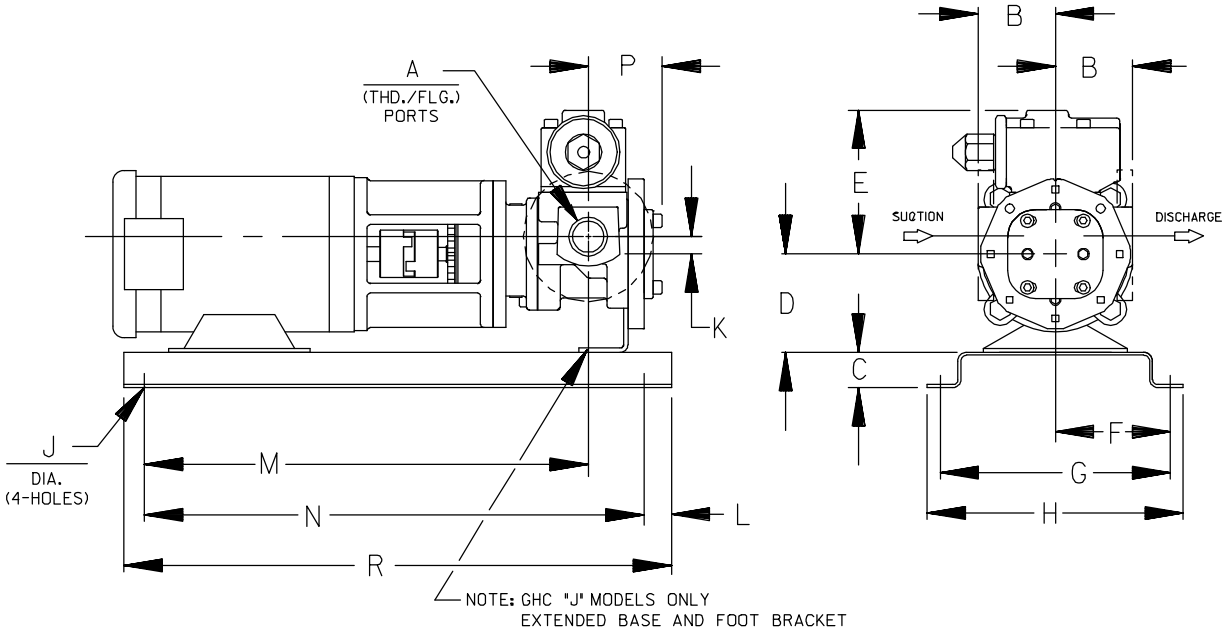


CAD FILE NO.: 16652

| PUMP MODEL | PUMP DIMENSIONS - INCHES[MILLIMETERS] | | | | | | | | | | | | | | | |
|---|---|---|---|---|---|---|---|---|---|---|---|---|---|---|---|---|
| | A | MOTOR FRAME | B | C | D | E | F | G | H | J | K | L | M | N | P | R |
| GHC D | 1" | 56C | 2.50 † [64] | 2.00 [51] | 3.50 [89] | 5.19 [132] | 6.25 [159] | 12.50 [318] | 14.50 [368] | .56 [14] | .62 [16] | 2.00 [51] | 17.24 [438] | 12.75 [324] | 2.73 [69] | 16.75 [425] |
| | | 143TC/145TC | 2.75 ✳ [70] | | | | | | | | | | 17.55 [446] | | | |
| | | | 3.12 ⊢ † [79] | | | | | | | | | | | | | |
| | | 182C/184C | 4.00 ⊢ [82] | | 4.50 [114] | | | | | | | | 18.80 [478] | | | |
| GHC G | 1- ½" | 56C | 3.50 † [89] | 2.00 [51] | 3.50 [89] | 6.00 [152] | 6.25 [159] | 12.50 [318] | 14.50 [368] | .56 [14] | .62 [16] | 2.00 [51] | 19.42 [493] | 12.75 [324] | 3.35 [85] | 16.75 [425] |
| | | 143TC/145TC | | | | | | | | | | | | | | |
| | | 182TC/184TC | 3.75 ✳ [95] | | 4.50 [114] | | | | | | | | 19.73 [501] | | | |
| | 2" | 182C/184C | | | | | | | | | | | | | | |
| | | 213TC/215TC | 4.00 ⊢ [102] | | 5.25 [133] | | | | | | | | 21.86 [555] | | | |
| GHC J | 2" | 182TC/184TC | 4.50 † [114] | 4.00 [102] | 4.50 [114] | 9.06 [230] | 9.50 [241] | 19.00 [483] | 21.00 [533] | .69 [18] | 1.12 [28] | 5.00 [127] | 26.86 [682] | 35.50 [902] | 4.66 [118] | 45.50 [1156] |
| | 2- ½" | 213TC/215TC | 5.00 ✳ [127] | | 5.25 [133] | | | | | | | | 27.75 [705] | | | |
| | | | 6.00 ⊢ [152] | | | | | | | | | | | | | |
| | 3" | 254TC/256TC | 6.31 ⊢ † [160] | | 6.25 [159] | | | | | | | | 33.74 [857] | | | |

✳ STANDARD DIMENSION

⊢ PORTS ARE COMPATIBLE WITH 125# OR 250# ANSI CAST IRON FLANGES. ALL OTHER PORTS ARE TAPPED NPT FOR ANSI PIPE. OPTIONAL (DIN) FLANGES OR TAPPED (BSP) PORTS AVAILABLE FOR EXPORT MARKET.

† 90° HOUSING

**NOTE: CONSULT FACTORY FOR;**

1. **HORSEPOWERS & FRAMES NOT SHOWN**
2. **DRIP PAN BASES**

**REFERENCE: PUMP FOOT BRACKET OPTIONS**

| HYDRAULIC SIZE | MOTOR FRAME | PUMP OPTION |
|---|---|---|
| D | 56C, 143TC, 145TC, 182C, 184C | 80Y |
| G | 56C, 143TC, 145TC, 182C, 184C | 80Y |
| J | 213TC, 215TC<br>254TC, 256TC | 80X<br>80W |

©2010 The Gorman-Rupp Company

# GHC

## DIRECT FLEX C-FLANGE DRIVE OPTIONS

(Drive Assemby Number Includes Base & Coupling, But **NOT** the Motor)

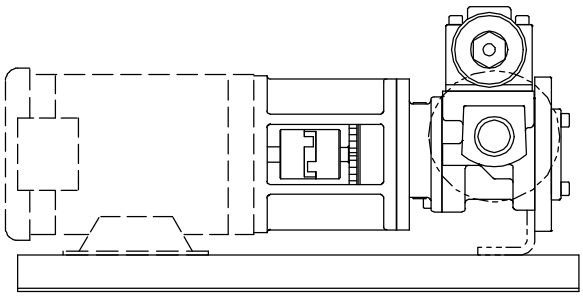

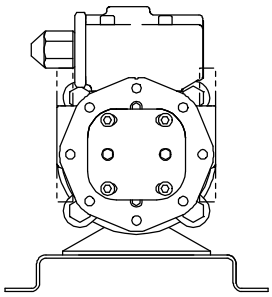

| PUMP MODEL NUMBER | 60Hz RPM | FRAME | MTG. FT. OPTION REQ. | DRIVE ASSY NO. |
|---|---|---|---|---|
| GHC D | 3450 1750 1150 850 | 56C | 80Y | 90351–540 |
| | | 143TC | 80Y | 90351–541 |
| | | 145TC | 80Y | 90351–544 |
| | | 184C | 80Y | 90351–590 |
| GHC G | 1750 1150 850 | 56C | 80Y | 90351–656 |
| | | 143TC | 80Y | 90351–659 |
| | | 145TC | 80Y | 90351–660 |
| | | 184C | 80Y | 90351–668 |
| | | 182TC | 80X | 90351–672 |
| | | 184TC | 80X | 90351–674 |
| GHC J | 1150 850 | 213TC | 80X | 90351–764 |
| | | 215TC | 80X | 90351–768 |
| | | 254TC | 80W | 90351–772 |
| | | 256TC | 80W | 90351–776 |
| | | 184TC | 80X | 90351–814 |

**NOTE: CONSULT FACTORY FOR;**
**HORSEPOWERS & FRAMES NOT SHOWN**
**DRIP PAN BASES**

©2010 The Gorman-Rupp Company

# GHC

## GRR REDUCER C-FLANGE FLEX DRIVE OPTION DIMENSIONS

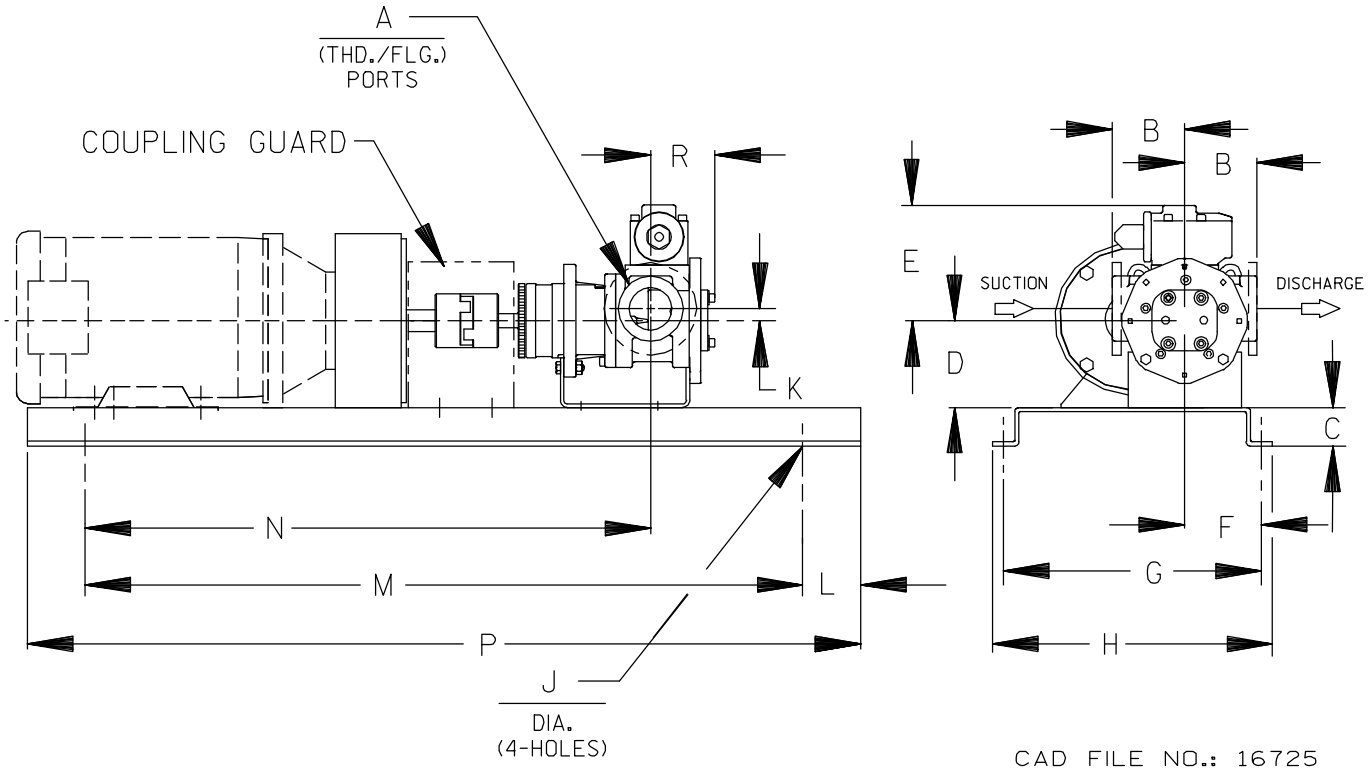


CAD FILE NO.: 16725

| PUMP MODEL | PUMP DIMENSIONS - INCHES[MILLIMETERS] | | | | | | | | | | | | | | | |
|---|---|---|---|---|---|---|---|---|---|---|---|---|---|---|---|---|
| | A | MOTOR FRAME | B | C | D | E | F | G | H | J | K | L | M | N | P | R |
| GHC D | 1" | 56C | 2.50 [64] † | 2.00 [51] | 3.50 [89] ✳ | 5.19 [1321] | 4.41 [112] | 13.00 [330] | 15.00 [381] | .56 [14] | .62 [16] | 3.00 [76] | 25.50 [648] | 20.35 [517] | 31.50 [800] | 2.66 [68] |
| | | 143TC/145TC | 2.75 [70] ✳ | | | | | | | | | | | | | |
| | | 182TC/184TC | 3.19 [81] ⊢ † | | 4.50 [114] | | 5.50 [140] | 14.63 [372] | 16.63 [422] | .56 [14] | .62 [16] | 3.00 [76] | 37.25 [946] | 27.05 [687] | 43.25 [1099] | |
| | | 213TC/215TC | 4.00 [82] ⊢ | | | | | | | | | | | | | |
| GHC G | 1- ½" | 56C | 3.50 [89] † | 2.00 [51] | 3.50 [89] ✳ | 6.00 [152] | 4.41 [112] | 13.00 [330] | 15.00 [381] | .56 [14] | .62 [16] | 3.00 [76] | 25.50 [648] | 22.66 [576] | 31.50 [800] | 3.27 [83] |
| | | 143TC/145TC | | | | | | | | | | | | | | |
| | | 182TC/184TC | 3.75 [95] ✳ | | 4.50 [114] | | | | | | | | | | | |
| | 2" | 213TC/215TC | 4.00 [102] ⊢ | | 3.25 [83] | | 5.50 [140] | 14.63 [372] | 16.63 [422] | .56 [14] | .62 [16] | 3.00 [76] | 37.25 [946] | 29.35 [735] | 43.25 [1099] | |
| GHC J | 2" | 182TC/184TC | 4.50 [114] † | 2.00 [51] | 4.50 [114] | 9.06 [230] | 5.50 [140] | 14.63 [372] | 16.63 [422] | .69 [18] | 1.12 [28] | 3.00 [76] | 37.25 [946] | 32.42 [823] | 43.25 [1099] | 4.56 [116] |
| | 2- ½" | | 5.00 [127] ✳ | | | | | | | | | | | | | |
| | 3" | 213TC/215TC | 6.00 [152] ⊢ | | 5.25 [133] ✳ | | | | | | | | | | | |
| | | | 6.31 [160] ⊢ † | | | | | | | | | | | | | |

✳ STANDARD DIMENSION

⊢ PORTS ARE COMPATIBLE WITH 125# OR 250# ANSI CAST IRON FLANGES. ALL OTHER PORTS ARE TAPPED NPT FOR ANSI PIPE. OPTIONAL (DIN) FLANGES OR TAPPED (BSP) PORTS AVAILABLE FOR EXPORT MARKET.

† 90° HOUSING

© 2010 The Gorman-Rupp Company

# GHC

## GRR REDUCER C-FLANGE FLEX DRIVE OPTIONS

(Drive Assy Number Includes Base, Coupling, Guard & Gear Reducer, But **NOT** the Motor)

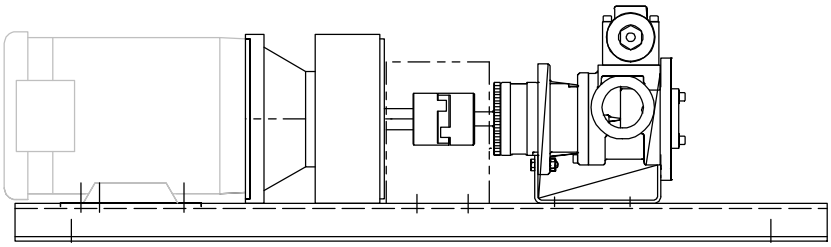

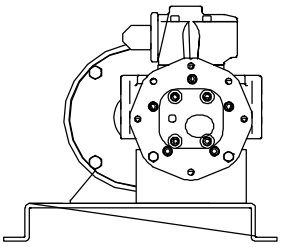

| PUMP MODEL | RPM @ 1750 | RPM @ 1150 | REDUCER ① RATIO | REDUCER ① MAX HP @ 1750 | REDUCER ① MAX HP @ 1150 | FRAME | MTG.FT. OPTION REQ. | DRIVE ASSY NO. |
|---|---|---|---|---|---|---|---|---|
| GHC D | 875 | 575 | 2.00:1 | 6.00 | 3.96 | 56C | STD | 90353–510 |
| | | | | 6.00 | 3.96 | 143TC/145TC | STD | 90353–516 |
| | | | | 6.00 | 3.96 | 182C/184C | 80F | 90353–519 |
| | | | | 20.00 | 13.2 | 182TC/184TC | 80F | 90353–526 |
| | 580 | 383 | 3.00:1 | 4.21 | 2.78 | 56C | STD | 90353–530 |
| | | | | 8.10 | 5.35 | 143TC/145TC | STD | 90353–536 |
| | | | | 8.10 | 5.35 | 182C/184C | 80F | 90353–539 |
| | | | | 12.98 | 8.57 | 182TC/184TC | 80F | 90353–546 |
| | 440 | 288 | 4.00:1 | 3.63 | 2.39 | 56C | STD | 90353–550 |
| | | | | 5.90 | 3.89 | 143TC/145TC | STD | 90353–556 |
| | | | | 5.90 | 3.89 | 182C/184C | 80F | 90353–564 |
| | | | | 11.35 | 7.49 | 56C | STD | 90353–568 |
| | 350 | 230 | 5.00:1 | 3.00 | 1.98 | 143TC/145TC | STD | 90353–570 |
| | | | | 3.00 | 1.98 | 182C/182C | 80F | 90353–573 |
| | | | | 5.90 | 3.89 | 182TC/184TC | 80F | 90353–579 |
| | | | | 10.07 | 6.65 | 182TC/184TC | 80F | 90353–586 |

(CONT'D)

① **Listed reducer horsepower rated for Standard Service (8–10 hrs/day). For Light Service (3–5 hrs/day) multiply maximum rated horsepower by 1.1. For Heavy Service (16–24 hrs/day) multiply maximum rated horsepower by 0.9.**

**NOTE: CONSULT FACTORY FOR;**
**HORSEPOWERS & FRAMES NOT SHOWN**
**DRIP PAN BASES**

©2010 The Gorman-Rupp Company

# GHC

## GRR REDUCER C-FLANGE FLEX DRIVE OPTIONS

(Drive Assy Number Includes Base, Coupling, Guard & Gear Reducer, But **NOT** the Motor)

| PUMP MODEL | RPM @ 1750 | RPM @ 1150 | REDUCER (1) RATIO | REDUCER (1) MAX HP @ 1750 | REDUCER (1) MAX HP @ 1150 | FRAME | MTG.FT. OPTION REQ. | DRIVE ASSY NO. |
|---|---|---|---|---|---|---|---|---|
| GHC G | 875 | 575 | 2.00:1 | 5.65 | 3.73 | 56C | STD | 90353–610 |
| | | | | 11.70 | 7.72 | 143TC/145TC | STD | 90353–619 |
| | | | | 11.70 | 7.72 | 182C/184C | 80F | 90353–622 |
| | | | | 13.01 | 8.59 | 182TC/184TC | 80F | 90353–625 |
| | | | | 13.01 | 8.59 | 213TC/215TC | 80J | 90353–627 |
| | 580 | 383 | 3.00:1 | 3.76 | 2.48 | 56C | STD | 90353–630 |
| | | | | 8.10 | 5.35 | 143TC/145TC | STD | 90353–633 |
| | | | | 8.10 | 5.35 | 182C/184C | 80F | 90353–642 |
| | | | | 10.62 | 7.01 | 182TC/184TC | 80F | 90353–646 |
| | | | | 10.62 | 7.01 | 213TC/215TC | 80J | 90353–648 |
| | 440 | 288 | 4.00:1 | 2.82 | 1.86 | 56C | STD | 90353–660 |
| | | | | 5.90 | 3.89 | 143TC/145TC | STD | 90353–663 |
| | | | | 5.90 | 3.89 | 182C/184C | 80F | 90353–672 |
| | | | | 7.24 | 4.78 | 182TC/184TC | 80F | 90353–675 |
| | | | | 7.24 | 4.78 | 213TC | 80J | 90353–677 |
| | 350 | 230 | 5.00:1 | 2.26 | 1.49 | 56C | STD | 90353–690 |
| | | | | 5.20 | 3.43 | 143TC/145TC | STD | 90353–699 |
| | | | | 5.20 | 3.43 | 182C/184C | 80F | 90353–702 |
| | | | | 5.98 | 3.95 | 182TC/184TC | 80F | 90353–706 |
| | | | | 5.98 | 3.95 | 213TC | 80J | 90353–708 |
| GHC J | 875 | 575 | 2.00:1 | 13.01 | 8.59 | 182TC/184TC | 80F | 90353–720 |
| | | | | 13.01 | 8.59 | 213TC/215TC | 80J | 90353–724 |
| | | | | 36.29 | 23.95 | 254TC/256TC | 80P | 90353–728 |
| | | | | 36.29 | 23.95 | 284TC/286TC | 80P | 90353–732 |
| | 580 | 383 | 3.00:1 | 10.62 | 7.01 | 182TC/184TC | 80F | 90353–735 |
| | | | | 10.62 | 7.01 | 213TC/215TC | 80J | 90353–739 |
| | 555 | 365 | 3.15:1 | 25.76 | 17.00 | 254TC/256TC | 80P | 90353–743 |
| | | | | 25.76 | 17.00 | 284TC | 80P | 90353–746 |
| | | | | 42.96 | 28.35 | 286TC | 80P | 90353–747 |
| | 440 | 288 | 4.00:1 | 7.24 | 4.78 | 182TC/184TC | 80F | 90353–750 |
| | | | | 7.24 | 4.78 | 213TC | 80J | 90353–754 |
| | 350 | 230 | 5.00:1 | 5.98 | 3.95 | 182TC/184TC | 80F | 90353–765 |
| | | | | 5.98 | 3.95 | 213TC | 80J | 90353–769 |
| | | | | 16.01 | 10.57 | 215TC | 80P | 90353–774 |
| | | | | 16.01 | 10.57 | 254TC | 80P | 90353–778 |
| | | | | 30.49 | 20.12 | 356TC | 80P | 90353–780 |

(1) **Listed reducer horsepower rated for Standard Service (8–10 hrs/day). For Light Service (3–5 hrs/day) multiply maximum rated horsepower by 1.1. For Heavy Service (16–24 hrs/day) multiply maximum rated horsepower by 0.9.**

**NOTE: CONSULT FACTORY FOR;**
**HORSEPOWERS & FRAMES NOT SHOWN**
**DRIP PAN BASES**

©2010 The Gorman-Rupp Company

GORMAN-RUPP
ROTARY GEAR PUMPS

# PERFORMANCE CURVES

## SPEED VS. CAPACITY/HORSEPOWER

DE Hydraulic Size

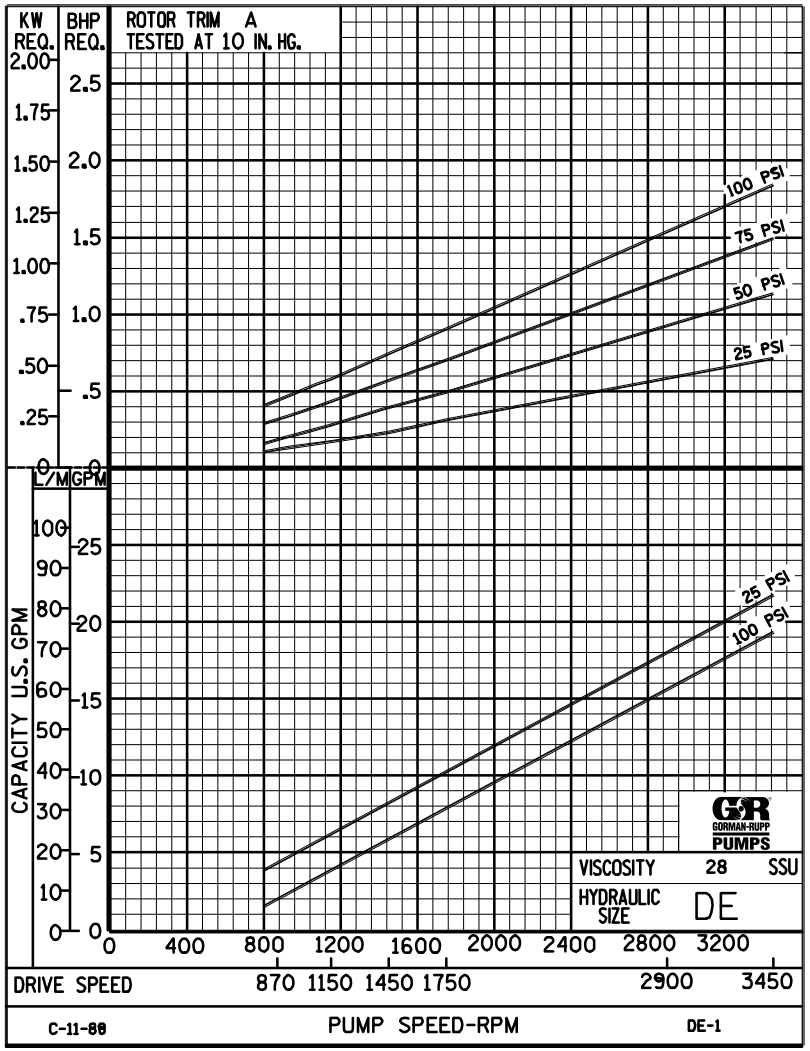


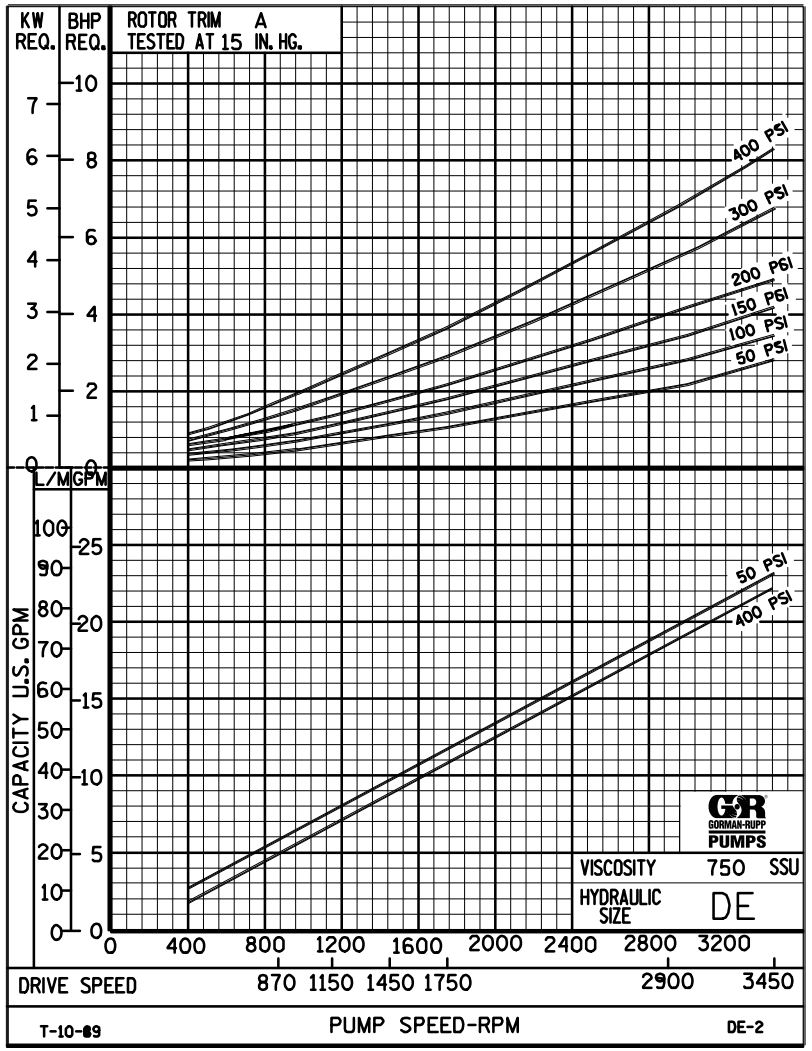




©2010 The Gorman-Rupp Company

GORMAN-RUPP
ROTARY GEAR PUMPS

# PERFORMANCE CURVES

## SPEED VS. CAPACITY/HORSEPOWER

DE Hydraulic Size

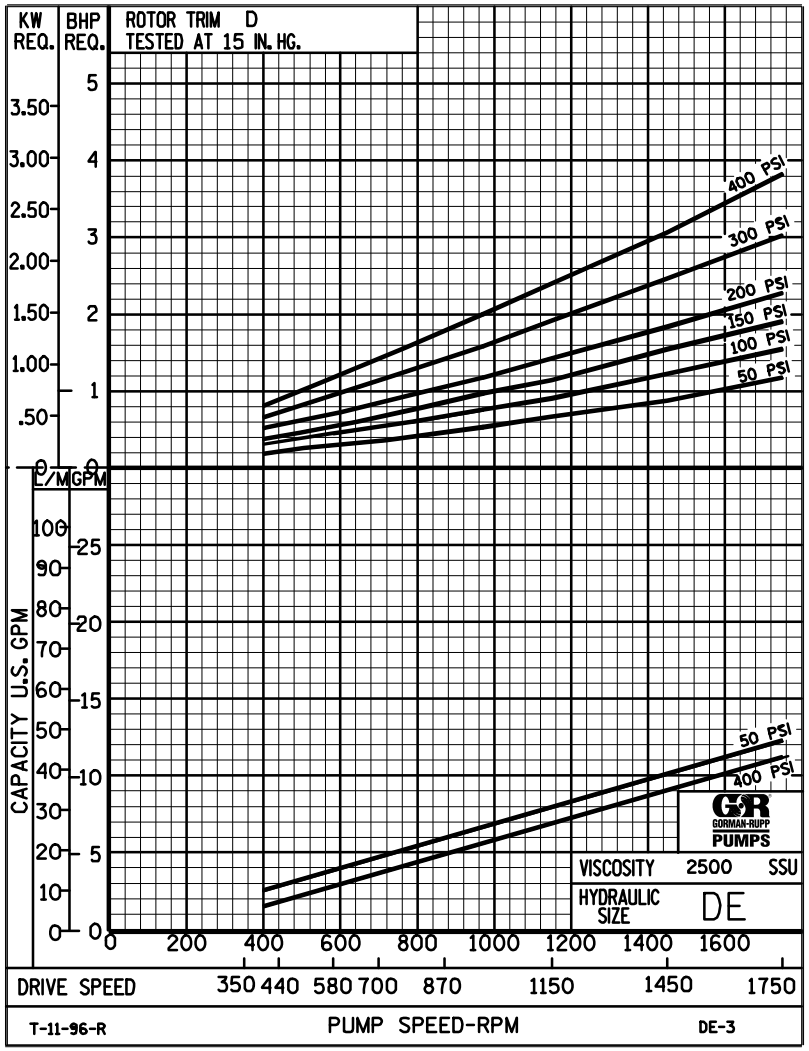


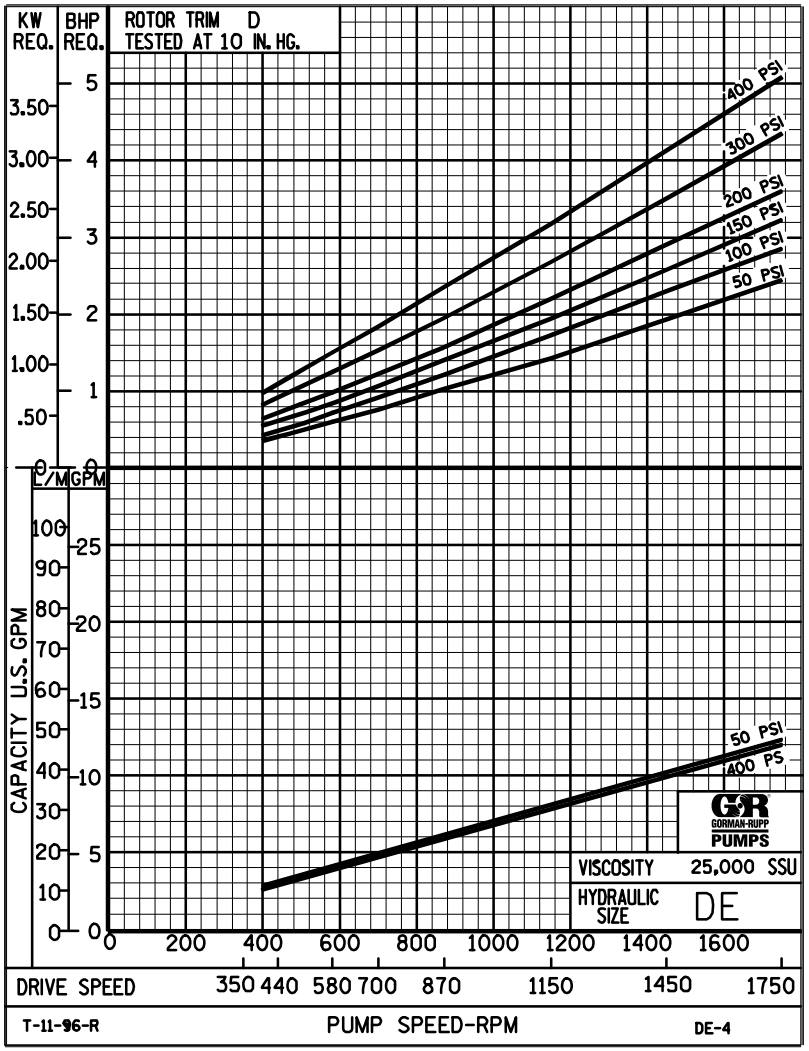




©2010 The Gorman-Rupp Company

GORMAN-RUPP
ROTARY GEAR PUMPS

# DE

## PUMP HYDRAULIC SIZE CHART

22 GPM
3450 RPM

| NOMINAL CAP. GPM | NOMINAL SPEED RPM | ROTOR TRIM | VISCOSITY (SSU) | N.I.P.R. (PSIA) | FRICTION PIPE LOSS (PSI/FT) (Based on Sch 40 Steel Pipe) PIPE DIAMETER ¾" | 1" | 1¼" | 1½" | 2" | FULL BYPASS RELIEF VALVE PRESSURE (PSI) CRACKING PRESS. (PSI) LOW PRES R/V 50 | 75 | 100 | HI PRES R/V 150 | 200 | CAPACITY (GPM) / H.P. REQUIRED DIFFERENTIAL PRESSURE (PSI) 25 | 50 | 75 | 100 | 150 | 200 | 300 | 400 |
|---|---|---|---|---|---|---|---|---|---|---|---|---|---|---|---|---|---|---|---|---|---|---|
| | | | | | | | | | | | | | | | MEDIUM DUTY AND HEAVY DUTY | | | | | | HEAVY DUTY ONLY | |
| 22 | 3450 | STD | 28 | 12.3 | .01 | .01 | .01 | .01 | .01 | 74 | 99 | 127 | | | 21.0 | 21.0 | 20.0 | 19.0 | | | | |
| | | | 32 | | .33 | .11 | .03 | .02 | .01 | | | | | | .85 | 1.2 | 1.6 | 1.9 | | | | |
| | | | 38 | 12.3 | .43 | .14 | .04 | .02 | .01 | 74 | 99 | 129 | 178 | | 22.0 | 21.0 | 21.0 | 20.0 | 20.0 | | | |
| | | | 50 | | .51 | .16 | .05 | .02 | .01 | | | | | | 1.2 | 1.5 | 1.9 | 2.2 | 3.0 | | | |
| | | | 70 | 12.3 | .59 | .18 | .05 | .03 | .01 | 74 | 100 | 131 | 179 | 232 | 22.0 | 22.0 | 22.0 | 21.0 | 21.0 | 20.0 | | |
| | | | 100 | | .68 | .22 | .06 | .03 | .01 | | | | | | 1.6 | 1.9 | 2.3 | 2.7 | 3.4 | 4.2 | | |
| | | | 150 | 12.3 | .75 | .24 | .07 | .04 | .01 | 74 | 101 | 134 | 180 | 234 | 23.0 | 22.0 | 22.0 | 22.0 | 21.0 | 21.0 | 20.0 | 20.0 |
| | | | 200 | | .80 | .27 | .09 | .05 | .02 | | | | | | 2.1 | 2.4 | 2.7 | 3.0 | 3.8 | 4.6 | 6.1 | 7.6 |
| | | | 300 | 12.3 | .85 | .33 | .11 | .06 | .02 | 75 | 103 | 137 | 181 | 236 | 23.0 | 23.0 | 22.0 | 22.0 | 22.0 | 21.0 | 21.0 | 20.0 |
| | | | 500 | | 1.41 | .54 | .18 | .10 | .04 | | | | | | 2.4 | 2.7 | 3.0 | 3.3 | 4.0 | 4.8 | 6.3 | 7.8 |
| | | | 750 | 12.3 | 2.11 | .80 | .27 | .15 | .06 | 76 | 105 | 140 | 183 | 238 | 23.0 | 23.0 | 23.0 | 23.0 | 23.0 | 22.0 | 22.0 | 22.0 |
| | | | 1,000 | | 2.81 | 1.07 | .36 | .19 | .07 | | | | | | 2.6 | 2.9 | 3.2 | 3.6 | 4.3 | 5.0 | 6.5 | 7.9 |
| | | "D" | 2,000 | | | | | | | | | | | | | | | | | | | |
| | | | 3,500 | | | | | | | | | | | | | | | | | | | |
| | | | 5,000 | | | | | | | | | | | | | | | | | | | |
| | | | 7,500 | | | | | | | | | | | | | | | | | | | |
| | | | 10,000 | | | | | | | | | | | | | | | | | | | |
| | | | 15,000 | | | | | | | | | | | | | | | | | | | |
| | | | 20,000 | | | | | | | | | | | | | | | | | | | |
| | | | 25,000 | | | | | | | | | | | | | | | | | | | |
| | | | 50,000 | | | | | | | | | | | | | | | | | | | |
| | | | 75,000 | | | | | | | | | | | | | | | | | | | |
| | | | 100,000 | | | | | | | | | | | | | | | | | | | |
| | | | 150,000 | | | | | | | | | | | | | | | | | | | |
| | | | 200,000 | | | | | | | | | | | | | | | | | | | |
| | | | 250,000 | | | | | | | | | | | | | | | | | | | |

(NOTE) For speeds not shown on the pump hydraulic charts, consult factory.

©2010 The Gorman-Rupp Company

GORMAN-RUPP
ROTARY GEAR PUMPS

# DE

## PUMP HYDRAULIC SIZE CHART

11 GPM
1750 RPM

| NOMINAL CAP. GPM | NOMINAL SPEED RPM | ROTOR TRIM | VISCOSITY (SSU) | N.I.P.R. (PSIA) | FRICTION PIPE LOSS (PSI/FT) (Based on Sch 40 Steel Pipe) PIPE DIAMETER ¾" | 1" | 1¼" | 1½" | 2" | FULL BYPASS RELIEF VALVE PRESSURE (PSI) CRACKING PRESS. (PSI) LOW PRES R/V 50 | 75 | 100 | HI PRES R/V 150 | 200 | CAPACITY (GPM) / H.P. REQUIRED DIFFERENTIAL PRESSURE (PSI) | 25 | 50 | 75 | 100 | 150 | 200 | 300 | 400 |
|---|---|---|---|---|---|---|---|---|---|---|---|---|---|---|---|---|---|---|---|---|---|---|---|
| | | | | | | | | | | | | | | | | MEDIUM DUTY AND HEAVY DUTY | | | | | | HEAVY DUTY ONLY | |
| 11 | 1750 | STD | 28 | 3.2 | .01 | .01 | .01 | .01 | .01 | 60 | 86 | 114 | | | 10.0 | 9.5 | 8.5 | 8.0 | | | | |
| | | | 32 | | .10 | .03 | .01 | .01 | .01 | | | | | | .39 | .57 | .76 | .95 | | | | |
| | | | 38 | 3.2 | .13 | .04 | .01 | .01 | .01 | 60 | 86 | 115 | 163 | | 10.0 | 9.5 | 8.5 | 8.5 | 7.5 | | | |
| | | | 50 | | .05 | .02 | .01 | .01 | .52 | | | | | | .52 | .70 | .89 | 1.1 | 1.5 | | | |
| | | | 70 | 3.2 | .17 | .06 | .02 | .01 | .01 | 60 | 87 | 116 | 163 | 215 | 10.0 | 10.0 | 9.5 | 9.0 | 8.5 | 7.5 | | |
| | | | 100 | | .21 | .06 | .02 | .01 | .01 | | | | | | .65 | .84 | 1.0 | 1.2 | 1.6 | 2.1 | | |
| | | | 150 | 3.2 | .28 | .09 | .03 | .01 | .01 | 60 | 87 | 117 | 164 | 216 | 11.0 | 10.0 | 10.0 | 10.0 | 9.5 | 9.5 | 9.0 | 8.5 |
| | | | 200 | | .36 | .14 | .05 | .03 | .01 | | | | | | .79 | .97 | 1.2 | 1.4 | 1.7 | 2.1 | 2.9 | 3.6 |
| | | | 300 | 3.2 | .43 | .16 | .06 | .03 | .01 | 61 | 88 | 118 | 164 | 216 | 11.0 | 11.0 | 11.0 | 10.0 | 10.0 | 10.0 | 10.0 | 9.5 |
| | | | 500 | | .70 | .27 | .09 | .05 | .02 | | | | | | .84 | 1.0 | 1.2 | 1.4 | 1.8 | 2.1 | 2.9 | 3.7 |
| | | | 750 | 3.2 | 1.05 | .40 | .14 | .07 | .03 | 61 | 89 | 120 | 165 | 217 | 11.0 | 11.0 | 11.0 | 11.0 | 11.0 | 11.0 | 11.0 | 10.0 |
| | | | 1,000 | | 1.41 | .54 | .18 | .10 | .04 | | | | | | .88 | 1.1 | 1.3 | 1.5 | 1.8 | 2.2 | 2.9 | 3.7 |
| | | "D" | 2,000 | 5.0 | 2.81 | 1.07 | .36 | .19 | .07 | 62 | 90 | 121 | 166 | 218 | 12.0 | 12.0 | 12.0 | 12.0 | 12.0 | 12.0 | 11.0 | 11.0 |
| | | | 3,500 | | 4.91 | 1.87 | .63 | .34 | .13 | | | | | | 1.1 | 1.3 | 1.5 | 1.6 | 2.0 | 2.4 | 3.1 | 3.9 |
| | | | 5,000 | 6.3 | 7.02 | 2.67 | .89 | .48 | .18 | 65 | 92 | 121 | 167 | 219 | 12.0 | 12.0 | 12.0 | 12.0 | 12.0 | 12.0 | 11.0 | 11.0 |
| | | | 7,500 | | 10.5 | 4.01 | 1.34 | .72 | .27 | | | | | | 1.3 | 1.5 | 1.7 | 1.9 | 2.2 | 2.6 | 3.4 | 4.2 |
| | | | 10,000 | 7.7 | 14.0 | 5.34 | 1.79 | .96 | .36 | 68 | 94 | 122 | 168 | 220 | 12.0 | 12.0 | 12.0 | 12.0 | 12.0 | 12.0 | 12.0 | 11.0 |
| | | | 15,000 | | 21.0 | 8.01 | 2.68 | 1.45 | .53 | | | | | | 1.7 | 1.9 | 2.1 | 2.3 | 2.6 | 3.0 | 3.8 | 4.6 |
| | | | 20,000 | 9.0 | 28.0 | 10.7 | 3.57 | 1.93 | .71 | 71 | 96 | 122 | 169 | 221 | 12.0 | 12.0 | 12.0 | 12.0 | 12.0 | 12.0 | 12.0 | 12.0 |
| | | | 25,000 | | 35.0 | 13.4 | 4.46 | 2.41 | .89 | | | | | | 2.2 | 2.4 | 2.6 | 2.9 | 3.2 | 3.6 | 4.2 | 5.1 |
| | | | 50,000 | | | | | | | | | | | | | | | | | | | |
| | | | 75,000 | | | | | | | | | | | | | | | | | | | |
| | | | 100,000 | | | | | | | | | | | | | | | | | | | |
| | | | 150,000 | | | | | | | | | | | | | | | | | | | |
| | | | 200,000 | | | | | | | | | | | | | | | | | | | |
| | | | 250,000 | | | | | | | | | | | | | | | | | | | |

(NOTE) For speeds not shown on the pump hydraulic charts, consult factory.

©2010 The Gorman-Rupp Company

GORMAN-RUPP
ROTARY GEAR PUMPS

# DE

## PUMP HYDRAULIC SIZE CHART

7 GPM
1150 RPM

| NOMINAL | | ROTOR TRIM | VISCOSITY | N.I.P.R. | FRICTION PIPE LOSS (PSI/FT) (Based on Sch 40 Steel Pipe) | | | | | FULL BYPASS RELIEF VALVE PRESSURE (PSI) | | | | | CAPACITY (GPM) / H.P. REQUIRED | | | | | | | |
|---|---|---|---|---|---|---|---|---|---|---|---|---|---|---|---|---|---|---|---|---|---|---|
| | | | | | | | | | | | | | | | DIFFERENTIAL PRESSURE (PSI) | | | | | | | |
| CAP. GPM | SPEED RPM | | (SSU) | (PSIA) | PIPE DIAMETER | | | | | CRACKING PRESS. (PSI) | | | | | 25 | 50 | 75 | 100 | 150 | 200 | 300 | 400 |
| | | | | | | | | | | LOW PRES R/V | | | HI PRES R/V | | MEDIUM DUTY AND HEAVY DUTY | | | | | | HEAVY DUTY ONLY | |
| | | | | | ¾" | 1" | 1¼" | 1½" | 2" | 50 | 75 | 100 | 150 | 200 | | | | | | | | |
| 7 | 1150 | STD | 28 | 2.0 | .01 | .01 | .01 | .01 | .01 | 56 | 81 | 108 | | | 6.0 | 5.0 | 4.5 | 3.5 | | | | |
| | | | 32 | | .04 | .02 | .01 | .01 | .01 | | | | | | .17 | .30 | .44 | .59 | | | | |
| | | | 38 | 2.0 | .06 | .02 | .01 | .01 | .01 | 56 | 81 | 109 | 161 | | 6.5 | 6.0 | 5.0 | 4.5 | 3.5 | | | |
| | | | 50 | | .07 | .02 | .01 | .01 | .01 | | | | | | .30 | .42 | .54 | .67 | .93 | | | |
| | | | 70 | 2.0 | .08 | .03 | .01 | .01 | .01 | 56 | 82 | 110 | 161 | 212 | 7.0 | 6.5 | 6.0 | 5.5 | 5.0 | 4.0 | | |
| | | | 100 | | .09 | .03 | .01 | .01 | .01 | | | | | | .41 | 52 | .64 | .76 | 1.0 | 1.3 | | |
| | | | 150 | 2.0 | .11 | .04 | .02 | .01 | .01 | 57 | 83 | 111 | 161 | 213 | 7.0 | 7.0 | 6.5 | 6.5 | 6.0 | 5.5 | 5.0 | 4.5 |
| | | | 200 | | .23 | .09 | .03 | .02 | .01 | | | | | | .50 | .60 | .71 | .82 | 1.1 | 1.4 | 1.9 | 2.3 |
| | | | 300 | 2.0 | .27 | .11 | .04 | .02 | .01 | 57 | 84 | 112 | 162 | 213 | 7.5 | 7.0 | 7.0 | 7.0 | 6.5 | 6.5 | 6.0 | 5.5 |
| | | | 500 | | .45 | .17 | .06 | .03 | .01 | | | | | | .52 | .63 | .74 | .86 | 1.1 | 1.4 | 1.9 | 2.4 |
| | | | 750 | 2.0 | .67 | .26 | .09 | .05 | .02 | 57 | 85 | 113 | 162 | 213 | 7.5 | 7.5 | 7.5 | 7.5 | 7.5 | 7.0 | 7.0 | 7.0 |
| | | | 1,000 | | .89 | .34 | .11 | .06 | .02 | | | | | | .54 | .64 | .75 | .87 | 1.1 | 1.4 | 1.9 | 2.4 |
| | | "D" | 2,000 | 3.5 | 1.79 | .68 | .23 | .12 | .05 | 58 | 86 | 113 | 163 | 213 | 8.0 | 8.0 | 7.5 | 7.5 | 7.5 | 7.5 | 7.0 | 7.0 |
| | | | 3,500 | | 3.13 | 1.19 | .40 | .22 | .08 | | | | | | .56 | .72 | .88 | 1.1 | 1.3 | 1.5 | 2.0 | 2.5 |
| | | | 5,000 | 4.5 | 4.46 | 1.70 | .57 | .31 | .11 | 60 | 87 | 113 | 163 | 213 | 8.0 | 8.0 | 8.0 | 7.5 | 7.5 | 7.5 | 7.5 | 7.0 |
| | | | 7,500 | | 6.70 | 2.55 | .85 | .46 | .17 | | | | | | .77 | .92 | 1.1 | 1.2 | 1.5 | 1.7 | 2.2 | 2.7 |
| | | | 10,000 | 5.5 | 8.93 | 3.40 | 1.14 | .61 | .23 | 62 | 88 | 114 | 164 | 214 | 8.0 | 8.0 | 8.0 | 8.0 | 7.5 | 7.5 | 7.5 | 7.5 |
| | | | 15,000 | | 13.4 | 5.10 | 1.70 | .92 | .34 | | | | | | 1.1 | 1.2 | 1.3 | 1.5 | 1.7 | 2.0 | 2.4 | 2.9 |
| | | | 20,000 | 6.4 | 17.9 | 6.80 | 2.27 | 1.23 | .45 | 63 | 88 | 114 | 164 | 214 | 8.0 | 8.0 | 8.0 | 8.0 | 8.0 | 8.0 | 8.0 | 7.5 |
| | | | 25,000 | | 22.3 | 8.50 | 2.84 | 1.53 | .57 | | | | | | 1.3 | 1.4 | 1.6 | 1.7 | 2.0 | 2.2 | 2.7 | 3.2 |
| | | | 50,000 | 9.9 | 44.6 | 17.0 | 5.68 | 3.06 | 1.13 | 65 | 91 | 117 | 167 | 218 | 8.0 | 8.0 | 8.0 | 8.0 | 8.0 | 8.0 | 8.0 | 7.5 |
| | | | 75,000 | | – | – | – | – | – | | | | | | 1.7 | 1.8 | 1.9 | 2.0 | 2.3 | 2.5 | 3.1 | 3.5 |
| | | | 100,000 | | | | | | | | | | | | | | | | | | | |
| | | | 150,000 | | | | | | | | | | | | | | | | | | | |
| | | | 200,000 | | | | | | | | | | | | | | | | | | | |
| | | | 250,000 | | | | | | | | | | | | | | | | | | | |

(NOTE) For speeds not shown on the pump hydraulic charts, consult factory.

©2010 The Gorman-Rupp Company

GORMAN-RUPP
ROTARY GEAR PUMPS

# DE

## PUMP HYDRAULIC SIZE CHART

5.5 GPM
870 RPM

| NOMINAL | | ROTOR TRIM | VISCOSITY | N.I.P.R. | FRICTION PIPE LOSS (PSI/FT) (Based on Sch 40 Steel Pipe) | | | | | FULL BYPASS RELIEF VALVE PRESSURE (PSI) | | | | | CAPACITY (GPM) / H.P. REQUIRED | | | | | | | |
|---|---|---|---|---|---|---|---|---|---|---|---|---|---|---|---|---|---|---|---|---|---|---|
| | | | | | | | | | | | | | | | DIFFERENTIAL PRESSURE (PSI) | | | | | | | |
| CAP. GPM | SPEED RPM | | (SSU) | (PSIA) | PIPE DIAMETER | | | | | CRACKING PRESS. (PSI) | | | | | 25 | 50 | 75 | 100 | 150 | 200 | 300 | 400 |
| | | | | | | | | | | LOW PRES R/V | | | HI PRES R/V | | MEDIUM DUTY AND HEAVY DUTY | | | | | | HEAVY DUTY ONLY | |
| | | | | | ¾" | 1" | 1¼" | 1½" | 2" | 50 | 75 | 100 | 150 | 200 | | | | | | | | |
| 5.5 | 870 | STD | 28 | 1.5 | .01 | .01 | .01 | .01 | .01 | 54 | 80 | 106 | | | 4.5 | 4.0 | 3.5 | 3.0 | | | | |
| | | | 32 | | .03 | .01 | .01 | .01 | .01 | | | | | | .11 | .20 | .32 | .45 | | | | |
| | | | 38 | 1.5 | .04 | .01 | .01 | .01 | .01 | 54 | 80 | 106 | 158 | | 4.5 | 4.5 | 3.5 | 3.5 | 3.0 | | | |
| | | | 50 | | .05 | .02 | .01 | .01 | .01 | | | | | | .15 | .26 | .38 | .50 | .75 | | | |
| | | | 70 | 1.5 | .06 | .02 | .01 | .01 | .01 | 54 | 80 | 107 | 158 | 208 | 5.0 | 4.5 | 4.5 | 4.0 | 3.5 | 3.0 | | |
| | | | 100 | | .07 | .03 | .01 | .01 | .01 | | | | | | .21 | .32 | .43 | .55 | .78 | 1.0 | | |
| | | | 150 | 1.5 | .09 | .04 | .01 | .01 | .01 | 55 | 81 | 107 | 158 | 209 | 5.5 | 5.0 | 5.0 | 4.5 | 4.5 | 4.0 | 3.5 | 3.0 |
| | | | 200 | | .19 | .07 | .02 | .01 | .01 | | | | | | .27 | .38 | .49 | .60 | .80 | 1.0 | 1.4 | 1.7 |
| | | | 300 | 1.5 | .23 | .09 | .03 | .02 | .01 | 55 | 81 | 108 | 159 | 209 | 5.5 | 5.5 | 5.0 | 5.0 | 5.0 | 4.5 | 4.5 | 4.0 |
| | | | 500 | | .38 | .15 | .05 | .03 | .01 | | | | | | .32 | .42 | .52 | .62 | .81 | 1.0 | 1.4 | 1.7 |
| | | | 750 | 1.5 | .57 | .22 | .07 | .03 | .01 | 55 | 81 | 108 | 159 | 209 | 5.5 | 5.5 | 5.5 | 5.5 | 5.5 | 5.5 | 5.0 | 5.0 |
| | | | 1,000 | | .76 | .29 | .10 | .05 | .02 | | | | | | .35 | .44 | .54 | .64 | .83 | 1.0 | 1.4 | 1.7 |
| | | "D" | 2,000 | 2.8 | 1.53 | .58 | .19 | .10 | .04 | 56 | 82 | 108 | 159 | 209 | 6.0 | 6.0 | 6.0 | 5.5 | 5.5 | 5.5 | 5.5 | 5.0 |
| | | | 3,500 | | 2.67 | 1.02 | .34 | .18 | .07 | | | | | | .39 | .50 | .61 | .72 | .91 | 1.1 | .1.5 | 1.8 |
| | | | 5,000 | 3.6 | 3.82 | 1.46 | .49 | .26 | .10 | 57 | 83 | 109 | 160 | 210 | 6.0 | 6.0 | 6.0 | 6.0 | 5.5 | 5.5 | 5.5 | 5.5 |
| | | | 7,500 | | 5.74 | 2.19 | .73 | .39 | .15 | | | | | | .53 | .64 | .75 | .86 | 1.1 | 1.3 | 1.6 | 2.0 |
| | | | 10,000 | 4.5 | 7.65 | 2.91 | .97 | .53 | .19 | 59 | 85 | 110 | 160 | 210 | 6.0 | 6.0 | 6.0 | 6.0 | 6.0 | 5.5 | 5.5 | 5.5 |
| | | | 15,000 | | 11.5 | 4.37 | 1.46 | .79 | .29 | | | | | | .72 | .85 | .94 | 1.0 | 1.2 | 1.4 | 1.8 | 2.1 |
| | | | 20,000 | 5.2 | 15.3 | 5.83 | 1.95 | 1.05 | .39 | 61 | 86 | 111 | 161 | 211 | 6.0 | 6.0 | 6.0 | 6.0 | 6.0 | 6.0 | 6.0 | 6.0 |
| | | | 25,000 | | 19.1 | 7.28 | 2.43 | 1.31 | .48 | | | | | | .93 | 1.0 | 1.1 | 1.2 | 1.4 | 1.6 | 2.0 | 2.4 |
| | | | 50,000 | 9.3 | 38.3 | 14.6 | 4.86 | 2.63 | .97 | 62 | 87 | 112 | 162 | 212 | 6.0 | 6.0 | 6.0 | 6.0 | 6.0 | 6.0 | 6.0 | 6.0 |
| | | | 75,000 | | – | – | – | – | – | | | | | | 1.2 | 1.3 | 1.4 | 1.5 | 1.7 | 1.8 | 2.2 | 2.6 |
| | | | 100,000 | | | | | | | | | | | | | | | | | | | |
| | | | 150,000 | | | | | | | | | | | | | | | | | | | |
| | | | 200,000 | | | | | | | | | | | | | | | | | | | |
| | | | 250,000 | | | | | | | | | | | | | | | | | | | |

(NOTE) For speeds not shown on the pump hydraulic charts, consult factory.

©2010 The Gorman-Rupp Company

GORMAN-RUPP
ROTARY GEAR PUMPS

# DE

## PUMP HYDRAULIC SIZE CHART

3.5 GPM
580 RPM

| NOMINAL | | ROTOR TRIM | VISCOSITY | N.I.P.R. | FRICTION PIPE LOSS (PSI/FT) (Based on Sch 40 Steel Pipe) | | | | | FULL BYPASS RELIEF VALVE PRESSURE (PSI) | | | | | CAPACITY (GPM) / H.P. REQUIRED | | | | | | | |
|---|---|---|---|---|---|---|---|---|---|---|---|---|---|---|---|---|---|---|---|---|---|---|
| | | | | | | | | | | | | | | | DIFFERENTIAL PRESSURE (PSI) | | | | | | | |
| CAP. GPM | SPEED RPM | | (SSU) | (PSIA) | PIPE DIAMETER | | | | | CRACKING PRESS. (PSI) | | | | | 25 | 50 | 75 | 100 | 150 | 200 | 300 | 400 |
| | | | | | | | | | | LOW PRES R/V | | | HI PRES R/V | | MEDIUM DUTY AND HEAVY DUTY | | | | | | HEAVY DUTY ONLY | |
| | | | | | ¾" | 1" | 1¼" | 1½" | 2" | 50 | 75 | 100 | 150 | 200 | | | | | | | | |
| 3.5 | 580 | STD | 28 | 1.1 | .01 | .01 | .01 | .01 | .01 | 53 | 78 | 104 | | | 3.0 | 2.5 | 2.0 | 2.0 | | | | |
| | | | 32 | | .02 | .01 | .01 | .01 | .01 | | | | | | .06 | .11 | .21 | .31 | | | | |
| | | | 38 | 1.1 | .03 | .01 | .01 | .01 | .01 | 53 | 78 | 104 | 154 | | 3.0 | 3.0 | 2.5 | 2.0 | 2.0 | | | |
| | | | 50 | | .04 | .01 | .01 | .01 | .01 | | | | | | .07 | .13 | .23 | .32 | .50 | | | |
| | | | 70 | 1.1 | .04 | .01 | .01 | .01 | .01 | 53 | 78 | 104 | 154 | 204 | 3.5 | 3.0 | 3.0 | 2.5 | 2.5 | 2.0 | | |
| | | | 100 | | .06 | .02 | .01 | .01 | .01 | | | | | | .09 | .16 | .26 | .37 | .59 | .75 | | |
| | | | 150 | 1.1 | .07 | .03 | .01 | .01 | .01 | 53 | 78 | 104 | 155 | 205 | 3.5 | 3.5 | 3.0 | 3.0 | 3.0 | 2.5 | 2.5 | 2.0 |
| | | | 200 | | .15 | .06 | .01 | .01 | .01 | | | | | | .12 | .20 | .30 | .41 | .59 | .75 | 1.0 | 1.2 |
| | | | 300 | 1.1 | .17 | .07 | .02 | .01 | .01 | 53 | 79 | 104 | 155 | 205 | 3.5 | 3.5 | 3.5 | 3.5 | 3.0 | 3.0 | 3.0 | 2.5 |
| | | | 500 | | .29 | .11 | .04 | .02 | .01 | | | | | | .15 | .23 | .33 | .44 | .59 | .75 | 1.1 | 1.3 |
| | | | 750 | 1.1 | .43 | .17 | .06 | .03 | .01 | 53 | 79 | 104 | 155 | 205 | 3.5 | 3.5 | 3.5 | 3.5 | 3.5 | 3.5 | 3.5 | 3.0 |
| | | | 1,000 | | .58 | .22 | .07 | .04 | .02 | | | | | | .17 | .26 | .36 | .46 | .60 | .75 | 1.1 | 1.4 |
| | | "D" | 2,000 | 2.3 | 1.15 | .44 | .15 | .08 | .03 | 54 | 79 | 105 | 155 | 205 | 4.0 | 4.0 | 3.5 | 3.5 | 3.5 | 3.5 | 3.5 | 3.5 |
| | | | 3,500 | | 2.00 | .77 | .26 | .14 | .05 | | | | | | .20 | .28 | .37 | .49 | .64 | .77 | 1.1 | 1.4 |
| | | | 5,000 | 3.0 | 2.87 | 1.09 | .37 | .20 | .07 | 54 | 80 | 105 | 156 | 206 | 4.0 | 4.0 | 4.0 | 3.5 | 3.5 | 3.5 | 3.5 | 3.5 |
| | | | 7,500 | | 4.31 | 1.64 | .55 | .30 | .11 | | | | | | .31 | .39 | .46 | .54 | .67 | .81 | 1.1 | 1.4 |
| | | | 10,000 | 3.8 | 5.74 | 2.19 | .73 | .40 | .15 | 55 | 80 | 106 | 156 | 206 | 4.0 | 4.0 | 4.0 | 4.0 | 4.0 | 3.5 | 3.5 | 3.5 |
| | | | 15,000 | | 8.61 | 3.28 | 1.09 | .59 | .22 | | | | | | .42 | .49 | .56 | .63 | .76 | .89 | 1.2 | 1.5 |
| | | | 20,000 | 4.5 | 11.5 | 4.37 | 1.46 | .79 | .29 | 56 | 81 | 106 | 156 | 206 | 4.0 | 4.0 | 4.0 | 4.0 | 4.0 | 4.0 | 4.0 | 3.5 |
| | | | 25,000 | | 14.4 | 5.46 | 1.83 | .99 | .36 | | | | | | .52 | .59 | .66 | .73 | .85 | .97 | 1.3 | 1.6 |
| | | | 50,000 | 7.9 | 28.7 | 10.9 | 3.65 | 1.97 | .73 | 56 | 81 | 106 | 156 | 206 | 4.0 | 4.0 | 4.0 | 4.0 | 4.0 | 4.0 | 4.0 | 3.5 |
| | | | 75,000 | | 43.0 | 16.4 | 5.47 | 2.95 | 1.09 | | | | | | .85 | .90 | .96 | 1.0 | 1.1 | 1.3 | 1.5 | 1.8 |
| | | | 100,000 | | | | | | | | | | | | | | | | | | | |
| | | | 150,000 | | | | | | | | | | | | | | | | | | | |
| | | | 200,000 | | | | | | | | | | | | | | | | | | | |
| | | | 250,000 | | | | | | | | | | | | | | | | | | | |

(NOTE) For speeds not shown on the pump hydraulic charts, consult factory.

©2010 The Gorman-Rupp Company