ACEGH

Standard Centrifugal Pump

Gasoline Engine Driven

Model 62 1/2D1-M20 S/G

Size 2 1/2 " x 2 1/2"

Total Head		CAPACITY OF PUMP IN U.S. GALLONS PER MINUTE AT CONTINUOUS PERFORMANCE				
P.S.I.	Feet					
143	330	32	32	32	32	32
130	300	70	70	70	70	70
108	250	78	105	114	114	114
87	200	88	126	151	156	160
65	150	100	143	175	190	202
43	100	110	116	194	215	232
Suction lift		25'	20'	15'	10'	5'

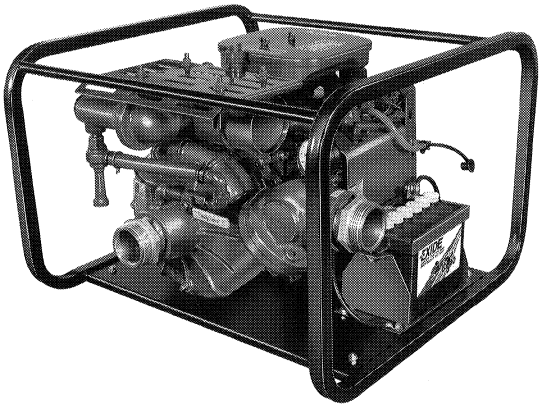

PUMP SPECIFICATIONS

Size: 2 ½" x 2 ½" N.P.T.-Female on Casing with Adapters for NPT to NSFHT Male
Casing: Aluminum No. 356-T6
(Maximum Operating Pressure 260 lbs.)
Impeller: Enclosed Type, Five Vanes, Aluminum No. 356-T6
(Handles 5/16" Dia. Spherical Solids)
Wear Ring; Replaceable: Bronze No. C83600
Balance Ring; Replaceable: Bronze No. C83600
Intermediate Bracket: Aluminum No. 356-T6
Seal: Type 21. Mechanical Self-Lubricated.
Rotating Face is Carbon.
Stationary Face is Ni-Resist.
Elastomers are Viton.
Cage and Spring are Stainless Steel No. 18-8.
Maximum Temperature of Liquid Pumped, 160° F.
Shaft Sleeve: Stainless Steel No. 304
Flap Valve: Rubber Diaphragm Stock No. 509 and Bronze No. C83600
Check Valve Housing: Aluminum No. 319-T6
Gaskets: Vegetable Fiber
Hardware: Standard Plated Steel
Standard Equipment:
Roll Cage with Rubber Feet
Discharge Check Valve
Discharge Pressure Gauge
Exhaust Primer System
Strainer
Brass Hose Adapters
Optional Equipment:
2 Wheel Truck Assy with Semi-Pneumatic Tires, 2.75" x 10"

ENGINE SPECIFICATIONS:

Model: Kohler M20S
Type: Two Cylinder, Four Cycle, Air Cooled Gasoline Engine
Displacement: 46.98 Cu. In.
Governor: Mechanical, Adjustable
Carburetor: Side Draft, Adjustable jet, w/Mech. Fuel Pump
Lubrication: Full-Pressure
Air Cleaner: Duel Element
Oil Reservoir: 3.5 U.S. Pints
Fuel Tank: Portable 6.6 Gallons with 6 Feet of Quick-Connect Fuel Line and Priming Bulb
Operating Time; Full Load: 3.4 Hours /1.95 Gallons Per Hour
Starter:12 Volt Electric/Alternator and Rope Pull
Standard Features:
Instrument Panel Includes Starter/Key, Switch, Throttle, Choke
Electronic Ignition
Cast Iron Cylinder Sleeves
Stellite Exhaust Valve, Seats and Rotators
Spark Arresting Muffler
Oil Filter
Oil Level Dip Stick
Oil Sentry™ Low Oil Shutdown

KOHLER PUBLISHED PERFORMANCE:

Max. Cont. B.H.P. 16.0 @ 3600 RPM
Max. Dyn. B.H.P. 20.0 @ 3600 RPM

WARNING
DO NOT USE IN EXPLOSIVE ATMOSPHERE OR FOR PUMPING VOLATILE FLAMMABLE LIQUIDS

© Copyright by the Gorman-Rupp Company 1988

Specification Data	OVERALL DIMENSIONS and WEIGHTS APPROXIMATE	NET WEIGHT: 235 LBS. SHIPPING WEIGHTS: 251 LBS. EXPORT CRATE: 12 CU. FT.
SECTION 60, PAGE 170		

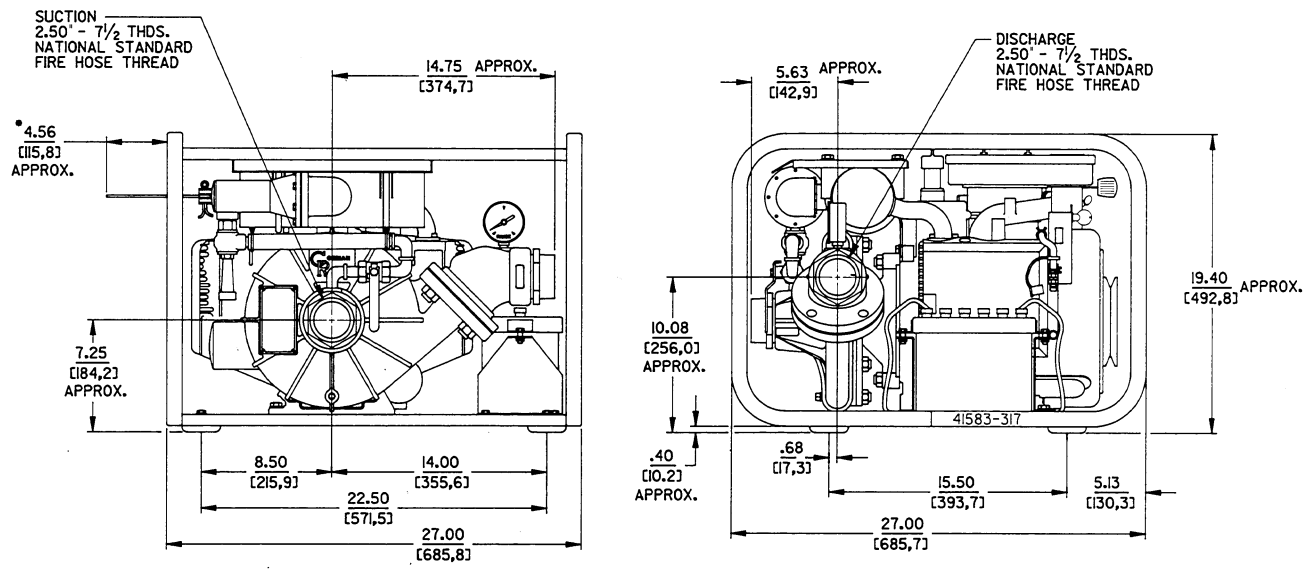

• ALLOWANCE FOR EXHAUST PRIMER OPERATION.

DIMENSIONS:
INCHES
[MILLIMETERS]

POWERED BY KOHLER M20S ENGINE.

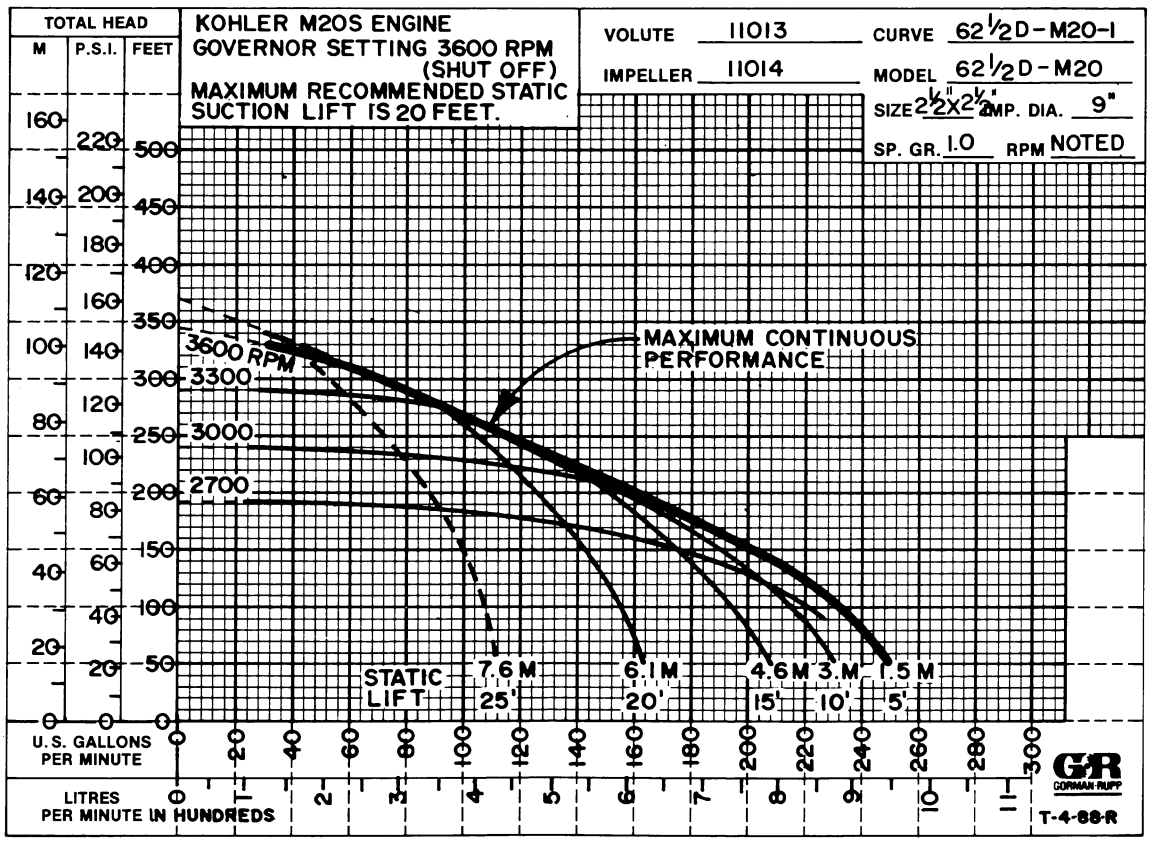

GORMAN-RUPP

THE GORMAN-RUPP COMPANY • MANSFIELD, OHIO

GORMAN-RUPP OF CANADA LIMITED • ST. THOMAS, ONTARIO, CANADA

Printed in U.S.A.

© Copyright by the Gorman-Rupp Company 1988