ACEGU

Self Priming Centrifugal Pump

Gasoline Engine Driven

Model 83E1–13

Size 3" x 3"

Total Head		Capacity of Pump in U.S. Gallons per Minute (GPM) at Continuous Performance				
P.S.I.	Feet					
36.4	84	25	25	25	25	25
34.7	80	53	53	53	53	53
30.3	70	95	102	102	102	102
26.0	60	125	149	149	149	149
21.7	50	137	176	188	188	188
17.3	40	144	196	217	220	220
13.0	30	150	207	238	250	250
8.7	20	155	216	252	270	276
Suction Lift		**25'**	**20'**	**15'**	**10'**	**5'**

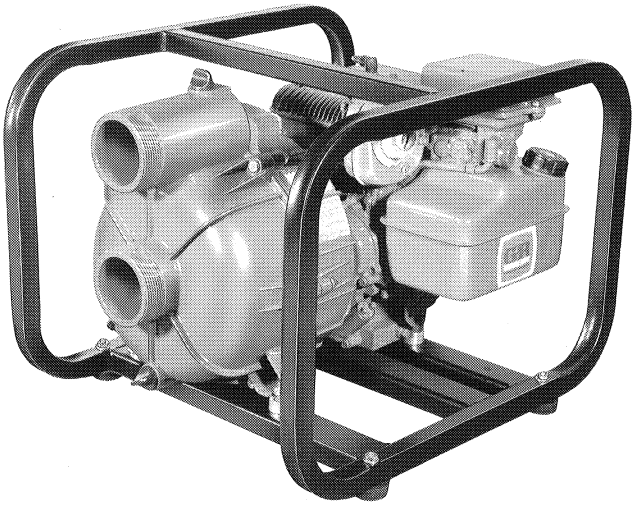

PUMP SPECIFICATIONS

Size: 3" x 3" NPT (76 mm x 76 mm) - Male.
Casing: Epoxy Coated Cast Aluminum. Maximum Operating Pressure 57 psi (4,0 kg/cm^2).*
Open Type, Four Vane Impeller: Gray Iron. Handles 3/4" (19 mm) Diameter Spherical Solids.
Volute Scroll: Gray Iron No. 30.
Seal: Mechanical, Self-Lubricated. Silicon Carbide Rotating and Stationary Faces. Fluorocarbon Elastomers (DuPont Viton® or Equivalent). Stainless Steel Cage and Spring. Maximum Temperature of Liquid Pumped, 160°F (71°C).*

**Consult Factory for Applications Exceeding Maximum Pressure and/or Temperature Indicated.*
Shaft Sleeve: Stainless Steel.
Flap Valve: EPDM Rubber.
Gaskets: EPDM Rubber.
Internal Wetted Hardware: Stainless Steel.
External Hardware: Standard Plated Steel.
O-Ring: EPDM Rubber.
Fill/Drain Plugs: Plastic.

Standard Equipment: Roll Cage w/Rubber Feet. Strainer.

Optional Equipment: Two Wheel Truck Assembly with 10" x 2.75" (254 mm x 70 mm) Semi-Pneumatic Tires.

WARNING!

Do not use in explosive atmosphere or for pumping volatile flammable liquids.

ENGINE SPECIFICATIONS

Model: Briggs & Stratton 13.
Type: Single Cylinder, Four Cycle, Air Cooled, Gasoline Engine.
Displacement: 12.57 Cu. In. (206 cc).
Carburetor: Pulsa-Jet.
Governor: Mechanical.
Lubrication: Splash System.
Air Cleaner: Paper Element.
Oil Reservoir: 1.25 U.S. Pts. (0,6 liter).
Fuel Tank: 3 U.S. Qts. (2,8 liter).
Full Load Operating Time: 1.5 Hrs.
Starter: Rope Rewind.

Standard Equipment: Muffler w/Deflector. Manual Choke, Stop, and Friction Control with Top Speed Limit. Oilgard™ Low Oil Shut Down.

BRIGGS & STRATTON PUBLISHED PERFORMANCE:
Maximum Continuous BHP 4.2 (3,1 kW) @ 3600 RPM
Maximum Dynamic BHP 5.0 (3,7 kW) @ 3600 RPM

© Copyright by the Gorman-Rupp Company 1999

Specification Data

SECTION 40, PAGE 830

APPROXIMATE DIMENSIONS and WEIGHTS

NET WEIGHT: 80 LBS. (36 KG.)
SHIPPING WEIGHT: 85 LBS. (39 KG.)
EXPORT CRATE SIZE: 4.8 CU. FT. (0,14 CU. M.)
WHEEL KIT ADD 25 LBS. (11.3 KG.); SHIPPING CRATE (SEPARATE) 3 CU. FT. (0,1 CU. M.)

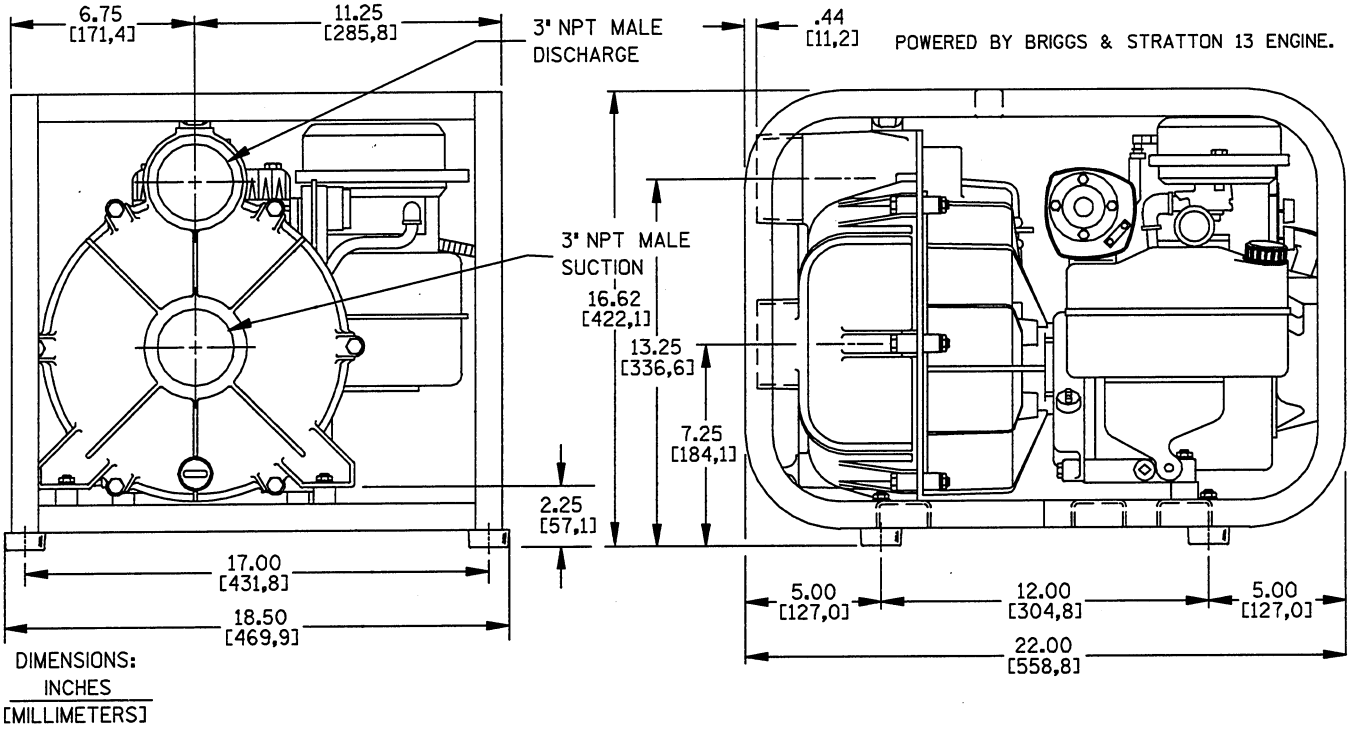

DIMENSIONS: INCHES / [MILLIMETERS]

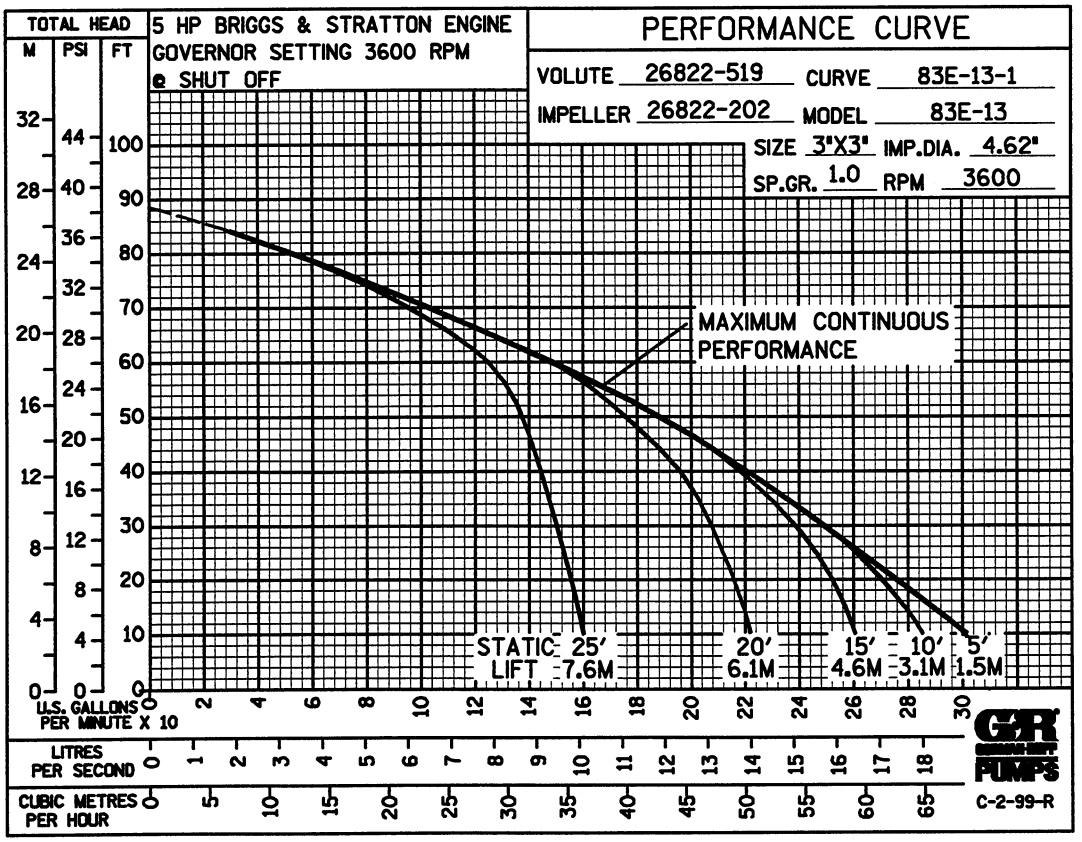

THE GORMAN-RUPP COMPANY • MANSFIELD, OHIO

GORMAN-RUPP OF CANADA LIMITED • ST. THOMAS, ONTARIO, CANADA

Specifications Subject to Change Without Notice

Printed in U.S.A.

© Copyright by the Gorman-Rupp Company 1999