OM—07578—01
January 8, 2024
Rev. A - 7/20/2026

INSTALLATION, OPERATION, AND MAINTENANCE MANUAL

WITH PARTS LIST

GORMAN-RUPP PUMPS

PA SERIES PUMP

MODEL
PA6C60—4045T S5

GORMAN-RUPP PUMPS

www.grpumps.com

©2024 Gorman-Rupp Pumps

Printed in U.S.A.

Register your new
Gorman-Rupp pump online at
www.grpumps.com

Valid serial number and e-mail address required.

WARNING!

The engine exhaust from this product contains chemicals known to the State of California to cause cancer, birth defects or other reproductive harm.

RECORD YOUR PUMP MODEL AND SERIAL NUMBER

Please record your pump model and serial number in the spaces provided below. Your Gorman-Rupp distributor needs this information when you require parts or service.

Pump Model: _____

Serial Number: _____

TABLE OF CONTENTS

INTRODUCTION . . . . . **PAGE I — 1**

SAFETY - SECTION A . . . . . **PAGE A — 1**

INSTALLATION — SECTION B . . . . . **PAGE B — 1**

Pump Dimensions . . . . . PAGE B — 1
PREINSTALLATION INSPECTION . . . . . PAGE B — 1
Battery Installation . . . . . PAGE B — 2
POSITIONING PUMP . . . . . PAGE B — 2
Lifting . . . . . PAGE B — 2
Mounting . . . . . PAGE B — 2
SUCTION AND DISCHARGE PIPING . . . . . PAGE B — 3
Materials . . . . . PAGE B — 3
Line Configuration . . . . . PAGE B — 3
Connections to Pump . . . . . PAGE B — 3
Gauges . . . . . PAGE B — 3
SUCTION LINES . . . . . PAGE B — 3
Fittings . . . . . PAGE B — 3
Strainers . . . . . PAGE B — 3
Sealing . . . . . PAGE B — 4
Suction Line Positioning . . . . . PAGE B — 4
DISCHARGE LINES . . . . . PAGE B — 5
Siphoning . . . . . PAGE B — 5
Valves . . . . . PAGE B — 5
ALIGNMENT . . . . . PAGE B — 5
AUTO-START . . . . . PAGE B — 5
Float Switch Installation . . . . . PAGE B — 6
COLD WEATHER INSTALLATION . . . . . PAGE B — 6

OPERATION — SECTION C . . . . . **PAGE C — 1**

OPERATION . . . . . PAGE C — 1
PRIMING . . . . . PAGE C — 1
STARTING . . . . . PAGE C — 1
OPERATION . . . . . PAGE C — 1
Leakage . . . . . PAGE C — 1
Pump Vacuum Check . . . . . PAGE C — 1
Liquid Temperature And Overheating . . . . . PAGE C — 2
Strainer Check . . . . . PAGE C — 2
STOPPING . . . . . PAGE C — 2
BEARING TEMPERATURE CHECK . . . . . PAGE C — 3
COLD WEATHER PRESERVATION . . . . . PAGE C — 3

TROUBLESHOOTING — SECTION D . . . . . **PAGE D — 1**

PREVENTIVE MAINTENANCE . . . . . PAGE D — 3

PUMP MAINTENANCE AND REPAIR - SECTION E . . . . . **PAGE E — 1**

STANDARD PERFORMANCE CURVE . . . . . PAGE E — 1

TABLE OF CONTENTS
(continued)

PARTS LIST:
- Pump Model . . . . . PAGE E – 3
- Power Unit Kit . . . . . PAGE E – 5
- Pump Assembly . . . . . PAGE E – 7
- Pump Sub Assembly . . . . . PAGE E – 9
- Repair Rotating Assembly . . . . . PAGE E – 11
- Priming Chamber Kit . . . . . PAGE E – 12
- Priming Chamber Assembly . . . . . PAGE E – 13
- Drive Assembly . . . . . PAGE E – 14

PUMP AND SEAL DISASSEMBLY AND REASSEMBLY . . . . . PAGE E – 15
- Priming Chamber Removal And Disassembly . . . . . PAGE E – 16
- Discharge Check Valve Removal and Disassembly . . . . . PAGE E – 16
- Back Cover Plate and Wear Plate Removal . . . . . PAGE E – 16
- Separating Pump And Drive Assembly From Engine . . . . . PAGE E – 16
- Draining Oil From Seal Cavity . . . . . PAGE E – 17
- Loosening Impeller . . . . . PAGE E – 17
- Pump Casing Removal . . . . . PAGE E – 17
- Impeller Removal . . . . . PAGE E – 18
- Seal Removal . . . . . PAGE E – 18
- Shaft and Bearing Removal and Disassembly . . . . . PAGE E – 18
- Shaft and Bearing Reassembly and Installation . . . . . PAGE E – 19
- Securing Bearing Housing And Drive Assembly To Engine . . . . . PAGE E – 20
- Seal Reassembly and Installation . . . . . PAGE E – 21
- Impeller Installation And Adjustment . . . . . PAGE E – 22
- Pump Casing Installation . . . . . PAGE E – 23
- Wear Plate and Back Cover Plate Installation and Adjustment . . . . . PAGE E – 23
- Discharge Check Valve Reassembly And Installation . . . . . PAGE E – 24
- Priming Chamber Assembly And Installation . . . . . PAGE E – 24

LUBRICATION . . . . . PAGE E – 25
- Seal Assembly . . . . . PAGE E – 25
- Bearings . . . . . PAGE E – 25
- Engine . . . . . PAGE E – 25

INTRODUCTION

Thank You for purchasing a Gorman-Rupp pump. **Read this manual** carefully to learn how to safely install and operate your pump. Failure to do so could result in personal injury or damage to the pump.

This pump is a PA Series, priming-assisted centrifugal model. The unit is designed for handling non-volatile, non-flammable liquids containing specified entrained solids. The basic material of construction is ductile iron, with stainless steel shaft and ductile iron wearing parts.

Because pump installations are seldom identical, this manual cannot possibly provide detailed instructions and precautions for every aspect of each specific application. Therefore, it is the responsibility of the owner/installer of the pump to ensure that applications not addressed in this manual are performed **only** after establishing that neither operator safety nor pump integrity are compromised by the installation. Pumps and related equipment **must** be installed and operated according to all national, local and industry standards.

If there are any questions regarding the pump which are not covered in this manual or in other literature accompanying the unit, please contact your Gorman-Rupp distributor or the Gorman-Rupp Company:

The Gorman-Rupp Company
P.O. Box 1217
Mansfield, Ohio 44901—1217
Phone: (419) 755—1011
or:
Gorman-Rupp of Canada Limited
70 Burwell Road
St. Thomas, Ontario N5P 3R7
Phone: (519) 631—2870

For information or technical assistance on the engine, contact the engine manufacturer's local dealer or representative.

The following are used to alert personnel to procedures which require special attention, to those which could damage equipment, and to those which could be dangerous to personnel:

DANGER!

Immediate hazards which WILL result in severe personal injury or death. These instructions describe the procedure required and the injury which will result from failure to follow the procedure.

WARNING!

Hazards or unsafe practices which COULD result in severe personal injury or death. These instructions describe the procedure required and the injury which could result from failure to follow the procedure.

CAUTION

Hazards or unsafe practices which COULD result in minor personal injury or product or property damage. These instructions describe the requirements and the possible damage which could result from failure to follow the procedure.

NOTE

Instructions to aid in installation, operation, and maintenance or which clarify a procedure.

SAFETY - SECTION A

This information applies to Prime Aire® Series pumps. Refer to the manual accompanying the engine or power source before attempting to begin operation.

Because pump installations are seldom identical, this manual cannot possibly provide detailed instructions and precautions for each specific application. Therefore, it is the owner/installer's responsibility to ensure that applications not addressed in this manual are performed only after establishing that neither operator safety nor pump integrity are compromised by the installation.

WARNING!

Before attempting to open or service the pump:

1. **Familiarize yourself with this manual.**
2. **Shut down the engine, disconnect the positive battery cable and take precautions to ensure that the pump will remain inoperative.**
3. **Allow the pump to completely cool if overheated.**
4. **Check the temperature and make sure the pump is cool before opening any covers, plates, or plugs.**
5. **Close the suction and discharge valves.**
6. **Vent the pump slowly and cautiously.**
7. **Drain the pump.**

WARNING!

This pump is designed to handle most non-volatile, non-flammable liquids containing specified entrained solids. Do not attempt to pump volatile, corrosive, or flammable liquids which may damage the pump or endanger personnel as a result of pump failure.

WARNING!

This pump is equipped with an automatic starting system, and is subject to automatic restart. Keep hands and clothing away from the unit to prevent injury during automatic operation. Disconnect the positive battery cable before performing any maintenance. Failure to do so may result in serious personal injury.

WARNING!

Death or serious personal injury and damage to the pump or components can occur if proper lifting procedures are not observed. Make certain that hoists, chains, slings or cables are in good working condition and of sufficient capacity and that they are positioned so that loads will be balanced and the pump or components will not be damaged when lifting. Suction and discharge hoses and piping must be removed from the pump before lifting. Lift the pump or component only as high as necessary and keep personnel away from suspended objects.

WARNING!

After the pump has been installed, make certain that the pump and all piping or hose connections are tight, properly supported and secure before operation.

WARNING!

Do not operate the pump against a closed discharge valve. If operated

against a closed discharge valve, pump components will deteriorate, and the liquid could come to a boil, build pressure, and cause the pump casing to rupture or explode. Momentary closure of a discharge valve is acceptable only when required for startup or shutdown procedures.

WARNING!

Do not remove plates, covers, gauges, pipe plugs, or fittings from an overheated pump. Vapor pressure within the pump can cause parts being disengaged to be ejected with great force. Allow the pump to cool completely before servicing.

WARNING!

This pump may be used to handle materials which could cause illness through direct exposure or emitted fumes. Wear adequate protective clothing when working on the pump or piping.

WARNING!

Do not operate the pump without guards in place over the rotating parts. Exposed rotating parts can catch clothing, fingers or tools, causing severe injury to personnel.

CAUTION

Make sure the pump is level. Lower jack stands and chock the wheels, if so equipped. Use caution when positioning the skid-mounted unit to prevent damage to the fuel tank.

DANGER!

Do not operate an internal combustion engine in an explosive atmosphere. When operating an internal combustion engine in an enclosed area, make sure exhaust fumes are piped to the outside. These fumes contain carbon monoxide, a deadly gas that is colorless, tasteless and odorless.

WARNING!

Fuel used by internal combustion engines presents an extreme explosion and fire hazard. Make certain that all fuel lines are securely connected and free of leaks. Never refuel a hot or running engine. Avoid overfilling the fuel tank. Always use the correct type of fuel.

WARNING!

Never tamper with the governor to gain more power. The governor establishes safe operating limits that should not be exceeded. Refer to the Performance Curve in Section, Page E-1 for the maximum continuous operating speed for this pump.

INSTALLATION — SECTION B

Review all SAFETY information in Section A.

Since pump installations are seldom identical, this section offers only general recommendations and practices required to inspect, position, and arrange the pump and piping.

Most of the information pertains to a standard **static lift** application where the pump is positioned above the free level of liquid to be pumped.

If installed in a **flooded suction application** where the liquid is supplied to the pump under pressure, some of the information such as mounting, line configuration, and priming must be tailored to the specific application. Since the pressure supplied to the pump is critical to performance and safety, **be sure** to limit the incoming pressure to 50% of the maximum permissible operating pressure as shown on the pump performance curve.

For further assistance, contact your Gorman-Rupp distributor or the Gorman-Rupp Company.

Pump Dimensions

See Figure 1 for the approximate physical dimensions of this pump.

OUTLINE DRAWING

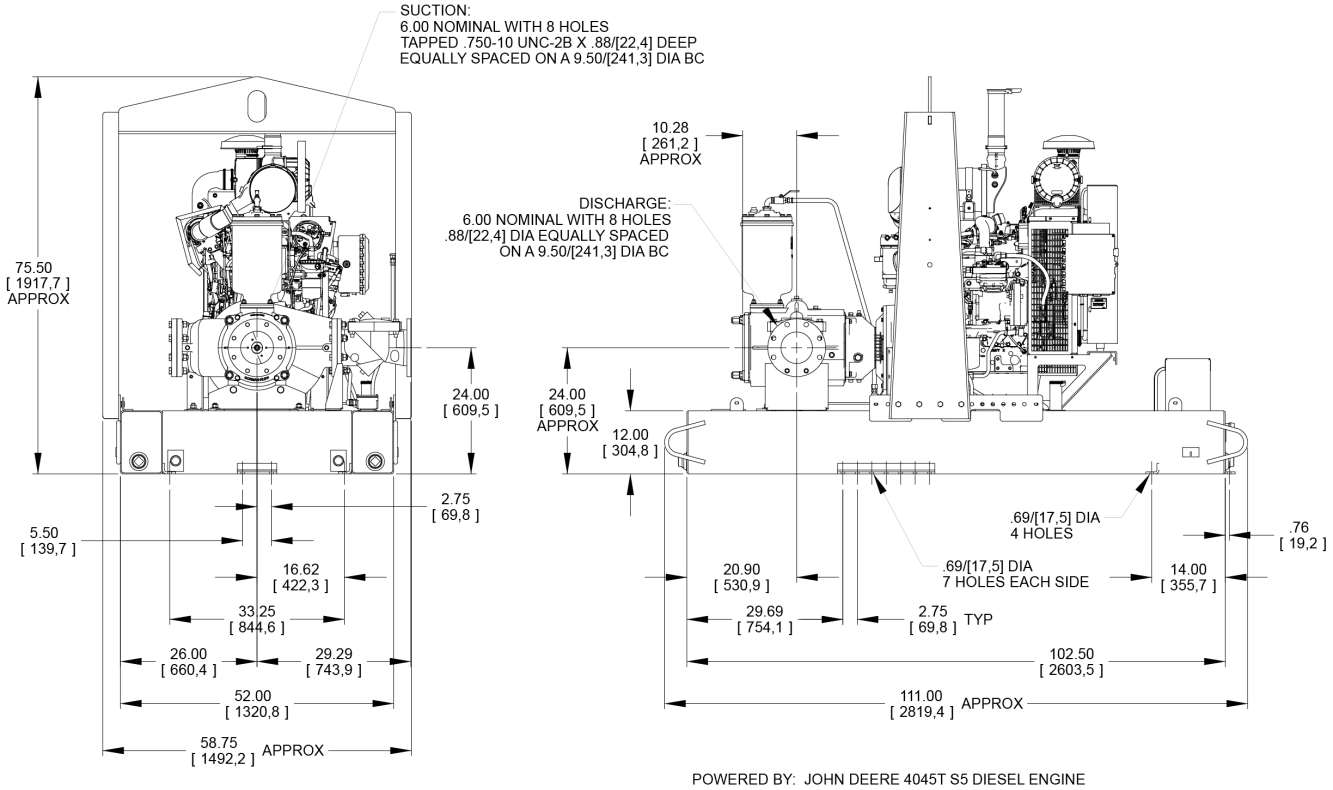

Figure 1. Pump Model PA6C60—4045T S5

PREINSTALLATION INSPECTION

The pump assembly was inspected and tested before shipment from the factory. Before installation, inspect the pump for damage which may have occurred during shipment. Check as follows:

a. Inspect the pump for cracks, dents, damaged threads, and other obvious damage.

b. Check for and tighten loose attaching hardware. Since gaskets tend to shrink after drying, check for loose hardware at mating surfaces.

c. Carefully read all tags, decals, and markings on the pump assembly, and perform all duties indicated. Note that the pump shaft rotates in the required direction.

CAUTION

Only operate this pump in the direction indicated by the arrow on the pump body and on the accompanying decal. Otherwise, the impeller could become loosened from the shaft and seriously damage the pump.

d. Check levels and lubricate as necessary. Refer to **LUBRICATION** in the **Maintenance and Repair Manual** and perform duties as instructed.

e. If the pump has been stored for more than 12 months, some of the components or lubricants may have exceeded their maximum shelf life. These **must be inspected or replaced** to ensure maximum pump service.

If the maximum shelf life has been exceeded, or if anything appears to be abnormal, contact your Gorman-Rupp distributor or the factory to determine the repair or updating policy. **Do not** put the pump into service until appropriate action has been taken.

Battery Installation

Unless otherwise specified on the pump order, the engine battery is **not** included with engine driven units.

Refer to the information accompanying the battery and/or electrolyte solution for activation and charging instructions.

Before installing the battery, clean the positive and negative cable connectors, and the battery terminals. Secure the battery by tightening the holddown brackets. The terminals and clamps may be coated with petroleum jelly to retard corrosion. Connect and tighten the positive cable first, then the negative cable.

POSITIONING PUMP

WARNING!

Death or serious personal injury and damage to the pump or components can occur if proper lifting procedures are not observed. Make certain that hoists, chains, slings or cables are in good working condition and of sufficient capacity and that they are positioned so that loads will be balanced and the pump or components will not be damaged when lifting. Suction and discharge hoses and piping must be removed from the pump before lifting. Lift the pump or component only as high as necessary and keep personnel away from suspended objects.

Lifting

Pump unit weights will vary depending on the mounting and drive provided. Check the shipping tag on the unit packaging for the actual weight, and use lifting equipment with appropriate capacity. Drain the pump and remove all customer-installed equipment such as suction and discharge hoses or piping before attempting to lift existing, installed units.

Mounting

Locate the pump in an accessible place as close as practical to the liquid being pumped. Level mounting is essential for proper operation. The pump may have to be supported or shimmed to provide for level operation and eliminate vibration.

For engine driven units, the pump **must** be positioned as level as possible to ensure sufficient lubrication and fuel supply to the engine.

If the pump has been mounted on a moveable base, make certain the base is stationary by setting the brake and blocking the wheels before attempting to operate the pump.

WARNING!

If the pump has been mounted on a movable base, do not attempt to operate the pump unless the unit is level. Be sure the leveling stands are positioned on a solid surface, and the wheels are chocked.

SUCTION AND DISCHARGE PIPING

Pump performance is adversely effected by increased suction lift, discharge elevation, and friction losses. See the performance curve and operating range shown on Page E-1 to be sure your overall application allows pump to operate within the safe operation range.

Materials

Either pipe or hose maybe used for suction and discharge lines; however, the materials must be compatible with the liquid being pumped. If hose is used in suction lines, it must be the rigid-wall, reinforced type to prevent collapse under suction. Using piping couplings in suction lines is not recommended.

Line Configuration

Keep suction and discharge lines as straight as possible to minimize friction losses. Make minimum use of elbows and fittings, which substantially increase friction loss. If elbows are necessary, use the long-radius type to minimize friction loss.

Connections to Pump

Before tightening a connecting flange, align it exactly with the pump port. Never pull a pipe line into place by tightening the flange bolts and/or couplings.

Lines near the pump must be independently supported to avoid strain on the pump which could cause excessive vibration, decreased bearing life, and increased shaft and seal wear. If hose-type lines are used, they should have adequate support to secure them when filled with liquid and under pressure.

Gauges

The pump is drilled and tapped for installing discharge pressure and vacuum suction gauges. It is recommended that gauges be installed to monitor pump performance. Seal the gauge threads with pipe dope to ensure an airtight seal. Follow the sealant manufacturer's recommendations when selecting and applying the pipe dope. The pipe dope should be compatible with the liquid being pumped.

SUCTION LINES

To avoid air pockets which could affect pump priming, the suction line must be as short and direct as possible. When operation involves a suction lift, the line must always slope upward to the pump from the source of the liquid being pumped; if the line slopes down to the pump at any point along the suction run, air pockets will be created.

Fittings

Suction lines should be the same size as the pump inlet. If reducers are used in suction lines, they should be the eccentric type, and should be installed with the flat part of the reducers uppermost to avoid creating air pockets. Valves are not normally used in suction lines, but if a valve is used, install it with the stem horizontal to avoid air pockets.

Strainers

A strainer or other device should be used to filter solids larger than the pump's capacity to avoid damage or decreased performance. Information about solids size handling can be found on the performance curve for your specific pump. When selecting or installing a strainer, make certain that the total area of the openings in the strainer is at least three or four times the cross section of the suction line, and the openings will not permit passage of solids larger than the solids handling capability of the pump.

Sealing

Since even a slight leak will affect priming, head, and capacity, especially when operating with a high suction lift, all connections in the suction line should be sealed with pipe dope to ensure an air-tight seal. Follow the sealant manufacturer's recommendations when selecting and applying the pipe dope. The pipe dope should be compatible with the liquid being pumped.

Suction Lines In Sumps

If a single suction line is installed in a sump, it should be positioned away from the wall of the sump at a distance equal to 1 1/2 times the diameter of the suction line.

If there is a liquid flow from an open pipe into the sump, the flow should be kept away from the suction inlet because the inflow will carry air down into the sump, and air entering the suction line will reduce pump efficiency.

If it is necessary to position inflow close to the suction inlet, install a baffle between the inflow and the suction inlet at a distance 1-1/2 times the diameter of the suction pipe. The baffle will allow entrained air to escape from the liquid before it is drawn into the suction inlet.

If two suction lines are installed in a single sump, the flow paths may interact, reducing the efficiency of one or both pumps. To avoid this, position the suction inlets so that they are separated by a distance equal to at least 3 times the diameter of the suction pipe.

Suction Line Positioning

The depth of submergence of the suction line is critical to **efficient** pump operation. Figure 2 shows recommended minimum submergence vs. velocity.

Although not recommended, the vacuum assisted priming feature allows the pump to be operated temporarily in a "slurping" application with varying water levels.

NOTE

The pipe submergence required may be reduced by installing a standard pipe increaser fitting at the end of the suction line. The larger opening size will reduce the inlet velocity. Calculate the required submergence using the following formula based on the increased opening size (area or diameter).

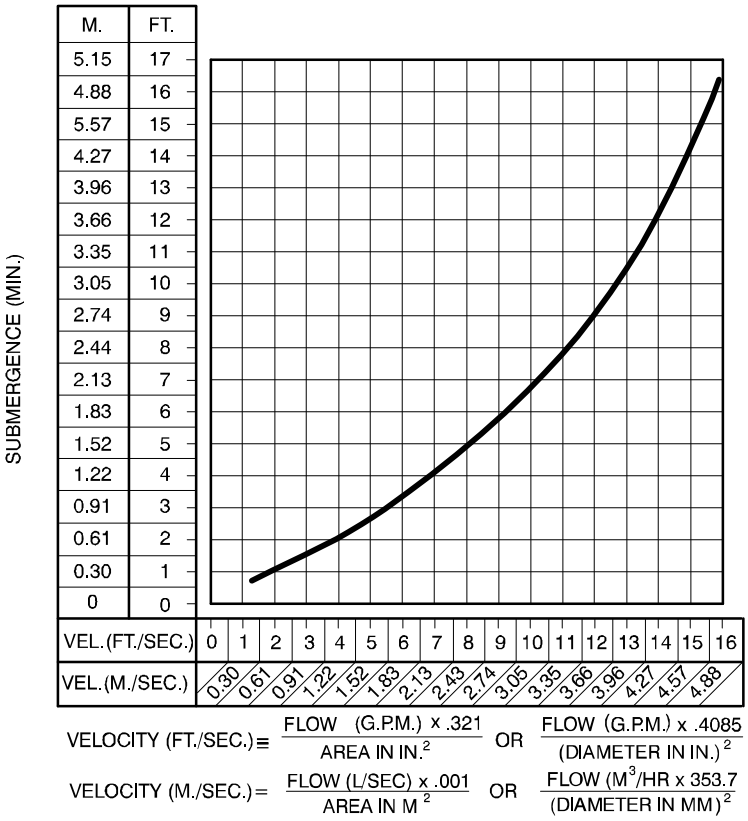

Figure 2. Recommended Minimum Suction Line Submergence vs. Velocity

DISCHARGE LINES

Siphoning

Do not terminate the discharge line at a level lower than that of the liquid being pumped unless a siphon breaker is used in the line. Otherwise, a siphoning action causing damage to the pump could result.

Valves

This pump is designed with a check valve in the discharge line.

If a throttling valve is desired in the discharge line, use a valve as large as the largest pipe to minimize friction losses. Never install a throttling valve in a suction line.

With high discharge heads, it is recommended that a throttling valve be installed in the discharge line to protect the pump from excessive shock pressure and reverse rotation when it is stopped.

CAUTION

If the application involves a high discharge head, gradually close the discharge throttling valve before stopping the pump.

ALIGNMENT

The alignment of the pump, air compressor and engine is critical for trouble-free mechanical operation. See Section E, **Securing Intermediate And Drive Assembly To Engine** in **MAINTENANCE AND REPAIR**, for details.

AUTO-START

The standard pump is equipped with an auto-start control system which allows the pump to start and stop as the liquid level in the wet well or sump rises and falls.

Refer to the information which follows for installation details for the liquid level sensing system provided with your pump.

Float Switch Installation

The Float Switch autostart system employs either a single or double float switch, where a bulb raises or lowers (floats) with the liquid level, thus activating an enclosed miniature switch. The floats are equipped with a socket type connector that plugs into a matching receptacle on the auto-start control box.

Standard floats are equipped with 50 feet (15,2 m) of cable.

When installing the floats, note the following:

a. **Be sure** to provide sufficient room in the wet well or sump so that floats do not get obstructed or drawn into the suction line. If a flexible suction hose is used, it may be extended to lay along the bottom of the wet well or sump and the float can be attached to the hose above the point where it bends along the bottom. Direct the suction line toward the flow, and the float(s) away from the flow. If a standpipe is available, attach the float switch cable to the standpipe in the sump at the approximate desired liquid level.

b. In a single float system, the cable can be tethered to the suction line or standpipe approximately 6 inches (152 mm) above the float. This setting allows approximately 9 inches (229 mm) of liquid rise between pump start/stop. The start/stop interval may be increased by extending the float end of the cable. The liquid level in the sump will increase approximately 8 inches (203 mm) between start/stop intervals for every 6 inches (152 mm) of cable increase.

c. If a double float switch system is used, position the “Start” float at the desired high water level in the sump, and the “Stop” float at the desired low water level in the pump.

d. Refer to Figure 3 for additional float switch data.

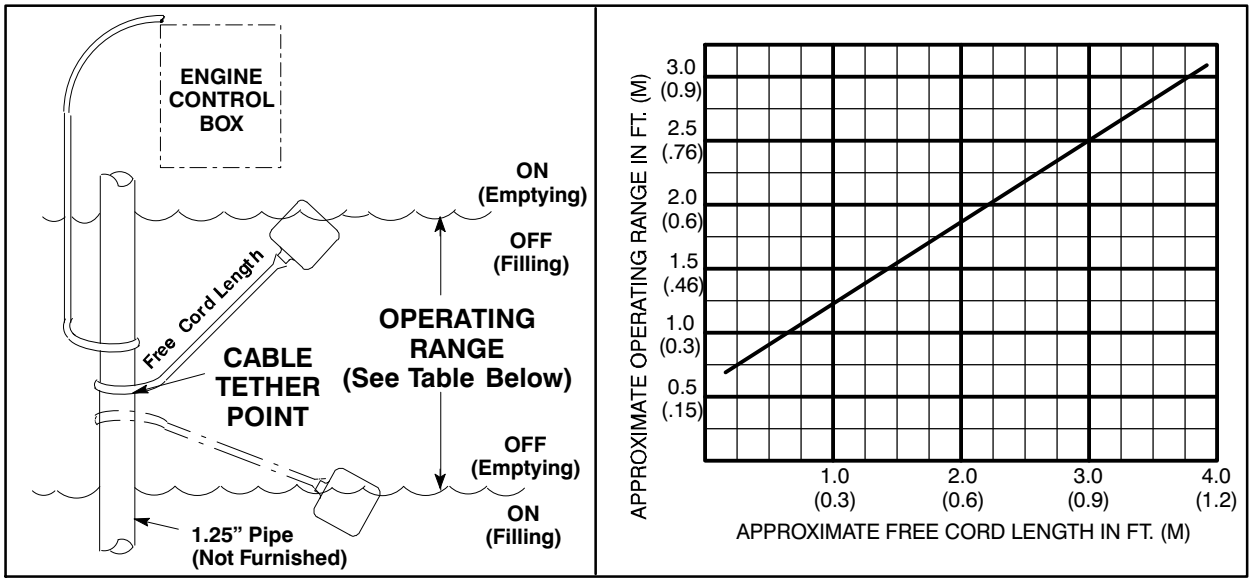

Figure 3. Float Switch Data

COLD WEATHER INSTALLATION

If the pump is to be installed in an environment where sub-freezing temperatures will occur during operation, consideration must be given to prevent the pump and components from freezing when the pump is idle between pumping cycles. With Gorman-Rupp priming assisted pumps, there are two methods of accomplishing this.

One method is through the use of an optional heated priming chamber, which is available as a factory-installed option or as a retrofit kit for most models (consult the factory). This method pumps heated liquid from the engine cooling system through the priming chamber to heat the chamber and its contents. This method is particularly effective where pumping cycles are short enough to ensure

that the liquid in the priming chamber never fully freezes.

The second method involves configuring the pumping system to drain both the priming chamber and pump casing after each pumping cycle. With no liquid remaining in the system, freezing cannot occur.

To configure the pump to drain between pumping cycles, the first step is to remove the check valve from the line that runs between the top of the priming hopper and the priming venturi. This check valve is located close to the venturi end of the line. Remove the check valve, then reconnect the line directly to the venturi. This will allow air to enter the pump through the top of the priming hopper when the pump shuts off, providing for complete drainage of the pump and priming hopper.

Next, install a drain line between the pump drain and the wet well or sump. This line must remain submerged in the liquid below the pump down level of the liquid level control device; otherwise, the pump may not prime. If the application involves liquids that could clog the drain line, make sure to check the line periodically to ensure it remains open; otherwise, liquid could remain in the casing, resulting in freezing and potential damage to the pumping system.

Configuring the system to drain between cycles will help ensure that the pump will not freeze during cold weather applications. **However, it should be noted that the time required for the pump to begin to discharge liquid will increase, as the pump will have to fully re-prime at the beginning of each pumping cycle.**

OPERATION — SECTION C

Review all SAFETY information in Section A.

Follow the instructions on all tags, labels and decals attached to the pump.

DANGER!

Do not operate an internal combustion engine in an explosive atmosphere. When operating an internal combustion engine in an enclosed area, make sure exhaust fumes are piped to the outside. These fumes contain carbon monoxide, a deadly gas that is colorless, tasteless and odorless.

OPERATION

WARNING!

This pump is designed to handle most non-volatile, non-flammable liquids containing specified entrained solids and corrosives. Do not attempt to pump volatile, corrosive, or flammable liquids which may damage the pump or endanger personnel as a result of pump failure.

CAUTION

Pump speed and operating condition points must be within the continuous performance range shown on the performance curve in Section E on page E—1.

PRIMING

Install the pump and piping as described in **INSTALLATION**. Make sure that the piping connections are tight, and that the pump is securely mounted. Check that the pump is properly lubricated (see **LUBRICATION** in **MAINTENANCE AND REPAIR**).

The pump will begin to prime upon startup. The air in the suction line will be discharged from the eductor discharge line. Complete priming is indicated by a positive discharge pressure reading.

If full priming is not achieved, the discharge check valve may be malfunctioning. If this occurs, shut down the pump and consult **Maintenance and Repair,** Section E for further details.

STARTING

Check the fuel level and oil levels in the engine, air compressor, pump bearings and seal housing.

Make sure the pump is level. Lower the jack stands and chock the wheels, if so equipped.

CAUTION

Make sure the pump is level. Lower jack stands and chock the wheels, if so equipped. Use caution when positioning the skid-mounted unit to prevent damage to the fuel tank.

WARNING!

This pump is equipped with an automatic starting system, and is subject to automatic restart. Keep hands and clothing away from the unit to prevent injury during automatic operation. Disconnect the positive battery cable before performing any maintenance. Failure to do so may result in serious personal injury.

Consult the engine operations manual before attempting to start the unit.

Manual Starting

On initial start-up, set the engine speed at in the half-throttle position. Turn the keyswitch to ‘MANU-

AL'. After the engine starts and the unit is fully primed, adjust the engine RPM until the desired flow rate is achieved.

CAUTION

Pump speed and operating condition points must be within the continuous performance range shown on the curve on Page E-1.

Automatic Starting

With the float system installed, follow the procedures outlined for manual starting and throttle adjustment. Switch the keyswitch to 'OFF' until the water level rises above the on point for the float system, then turn the keyswitch to the 'AUTO' setting. The unit will run until the float signals the control that the water in the wet well is at the float off point, at which time the unit will shut down automatically. When the float signals the control that the water in the wet well is at the float on point, the unit will restart automatically, repeating the cycle.

OPERATION

Leakage

Once the pump is fully primed, no leakage should be visible at pump mating surfaces, or at pump connections or fittings. Keep all line connections and fittings tight to maintain maximum pump efficiency.

Pump Vacuum Check

Read the vacuum gauge with the pump primed and at operation speed. Shut off the pump. The vacuum gauge reading will immediately drop proportionate to static suction lift, and should then stabilize. If the vacuum reading falls off rapidly after stabilization, an air leak exists. Before checking for the source of the leak, check the point of installation of the vacuum gauge.

Liquid Temperature And Overheating

The **maximum** liquid temperature for this pump is 160° F (71°C). Do not apply it at a higher operating temperature.

Overheating can occur if operated with the valves in the suction or discharge lines closed. Operating against closed valves could bring the liquid to a boil, build pressure, and cause the pump to rupture or explode. If overheating occurs, stop the pump immediately and allow it to completely cool before servicing it. **Approach any over-heated pump cautiously**.

WARNING!

Allow an over-heated pump to completely cool before servicing. Do not remove plates, covers, gauges, or fittings from an overheated pump. Liquid within the pump can reach boiling temperatures, and vapor pressure within the pump can cause parts being disengaged to be ejected with great force. After the pump cools, drain the liquid from the pump by removing the casing drain plug. Use caution when removing the plug to prevent injury to personnel from hot liquid.

As a safeguard against rupture or explosion due to heat, this pump is equipped with a pressure relief valve which will open if vapor pressure within the pump casing reaches a critical point. If over-heating does occur, stop the pump immediately and allow it to cool before servicing it. **Approach any over-heated pump cautiously**. It is recommended that the pressure relief valve assembly be replaced at each overhaul, or any time the pump casing over-heats and activates the valve. **Never** replace this valve with a substitute which has not been specified or provided by the Gorman-Rupp Company.

Strainer Check

Check the strainer regularly, and clean it as necessary. The strainer should also be checked if pump flow rate begins to drop. Monitor and record the

vacuum suction gauge readings regularly to detect strainer blockage.

Never introduce air or steam pressure into the pump casing or piping to remove a blockage. This could result in personal injury or damage to the equipment. If backflushing is absolutely necessary, **liquid pressure** must be limited to 50% of the maximum permissible operating pressure shown on the pump performance curve.

STOPPING

Never halt the flow of liquid suddenly. If the liquid being pumped is stopped abruptly, damaging shock waves can be transmitted to the pump and piping system. Close all connecting valves slowly.

Reduce the throttle speed slowly and allow the engine to idle briefly before stopping.

CAUTION

If the application involves a high discharge head, gradually close the discharge throttling valve before stopping the pump.

After stopping the pump, switch off the engine ignition and remove the key to ensure that the pump will remain inoperative.

BEARING TEMPERATURE CHECK

Bearings normally run at higher than ambient temperatures because of heat generated by friction. Temperatures up to 160°F (71°C) are considered normal for bearings, and they can operate safely to at least 180°F (82°C).

Checking bearing temperatures by hand is inaccurate. Bearing temperatures can be measured accurately by placing a contact-type thermometer against the housing. Record this temperature for future reference.

A sudden increase in bearing temperatures is a warning that the bearings are at the point of failing to operate properly. Make certain that the bearing lubricant is of the proper viscosity and at the correct level (see **LUBRICATION** in the Maintenance and Repair Manual). Bearing overheating can also be caused by shaft misalignment and/or excessive vibration.

When pumps are first started, the bearings may seem to run at temperatures above normal. Continued operation should bring the temperatures down to normal levels.

COLD WEATHER PRESERVATION

If the pump will be idle for an extended period of time in below freezing conditions, drain the pump and priming hopper to prevent damage from freezing. Also, clean out any solids by flushing with a hose. Operate the pump for approximately one minute; this will remove any remaining liquid that could freeze the pump rotating parts. If the pump will be idle for more than a few hours, or if it has been pumping liquids containing a large amount of solids, drain the pump, and flush it thoroughly with clean water. To prevent large solids from clogging the drain port and preventing the pump from completely draining, insert a rod or stiff wire in the drain port, and agitate the liquid during the draining process. Clean out any remaining solids by flushing with a hose.

If the pump is to be installed in an environment where sub-freezing temperatures will occur during operation, consideration must be given to prevent the pump and components from freezing when the pump is idle between pumping cycles. Refer to **COLD WEATHER INSTALLATION** in the **Installation** section of this manual for details.

TROUBLESHOOTING — SECTION D

Review all SAFETY information in Section A.

WARNING!

Before attempting to open or service the pump:

1. **Familiarize yourself with this manual.**
2. **Shut down the engine and disconnect the positive battery cable to ensure that the pump will remain inoperative.**
3. **Allow the pump to completely cool if overheated.**
4. **Check the temperature before opening any covers, plates, or plugs.**
5. **Close the suction and discharge valves.**
6. **Vent the pump slowly and cautiously.**
7. **Drain the pump.**

WARNING!

This pump is equipped with an automatic starting system, and is subject to automatic restart. Keep hands and clothing away from the unit to prevent injury during automatic operation. Disconnect the positive battery cable before performing any maintenance. Failure to do so may result in serious personal injury.

TROUBLE	POSSIBLE CAUSE	PROBABLE REMEDY
PUMP FAILS TO PRIME	Discharge check valve contaminated, damaged, or unable to seat.	Clean or replace check valve.
	Air leak in suction line.	Correct leak.
	Lining of suction hose collapsed.	Replace suction hose.
	Leaking or worn seal or pump gasket.	Check pump vacuum. Replace leaking or worn seal or gasket.
	Suction lift or discharge head too high.	Check piping installation and install bypass line if needed. See **INSTALLATION**.
	Air compressor damaged or belts broken.	Check and repair/replace.
	Strainer clogged.	Check strainer and clean if necessary.
PUMP STOPS OR FAILS TO DELIVER RATED FLOW OR PRESSURE	Eductor clogged.	Check and clean eductor.
	Air leak in suction line.	Correct leak.
	Lining of suction hose collapsed.	Replace suction hose.
	Leaking or worn seal or pump gasket.	Check pump vacuum. Replace leaking or worn seal or gasket.

TROUBLE	POSSIBLE CAUSE	PROBABLE REMEDY
PUMP STOPS OR FAILS TO DELIVER RATED FLOW OR PRESSURE (cont.)	Strainer clogged.	Check strainer and clean if necessary.
	Discharge check valve clogged.	Check and clean check valve.
	Suction intake not submerged at proper level or sump too small.	Check installation and correct submergence as needed.
	Impeller or other wearing parts worn or damaged.	Replace worn or damaged parts. Check that impeller is properly centered and rotates freely.
	Impeller clogged.	Free impeller of debris.
	Discharge head too high.	Install bypass line.
	Suction lift too high.	Measure lift w/vacuum gauge. Reduce lift and/or friction losses in suction line.
	Pump speed too slow.	Check engine output; consult engine operation manual.
	Belt or flexible coupling broken.	Check and replace as necessary.
PUMP REQUIRES TOO MUCH POWER	Pump speed too high.	Check engine output.
	Extreme ambient temperature.	Reduce pump output.
	Discharge head too low.	Adjust discharge valve.
	Fuel filter clogged.	Check & replace often in extreme operating conditions.
	Liquid solution too thick.	Dilute if possible.
	Fuel contaminated.	Check and replace as required.
	Pump or jack shaft bearing(s) frozen.	Disassemble, check and replace bearing(s) as required..
PUMP CLOGS FREQUENTLY	Discharge flow too slow.	Open discharge valve fully to increase flow rate, and run engine at maximum governed speed.
	Suction check valve or foot valve clogged or binding.	Clean valve.
	Liquid solution too thick.	Dilute if possible.
EXCESSIVE NOISE	Cavitation in pump.	Reduce suction lift and/or friction losses in suction line. Record vacuum and pressure gauge readings and consult local representative or factory.
	Pumping entrained air.	Locate and eliminate source of air bubble.
	Pump or drive not securely mounted.	Secure mounting hardware.
	Impeller clogged or damaged.	Clean out debris; replace damaged parts.

TROUBLE	POSSIBLE CAUSE	PROBABLE REMEDY
BEARINGS RUN TOO HOT	Bearing temperature is high, but within limits.	Check bearing temperature regularly to monitor any increase.
	Low or incorrect lubricant.	Check for proper type and level of lubricant.
	Suction and discharge lines not properly supported.	Check piping installation for proper support.
	Drive misaligned.	Align drive properly.
	Excessive tension on drive belt.	Check belt tension. Adjust as required.

PREVENTIVE MAINTENANCE

Since pump applications are seldom identical, and pump wear is directly affected by such things as the abrasive qualities, pressure and temperature of the liquid being pumped, this section is intended only to provide general recommendations and practices for preventive maintenance. Regardless of the application however, following a routine preventive maintenance schedule will help assure trouble-free performance and long life from your Gorman-Rupp pump. For specific questions concerning your application, contact your Gorman-Rupp distributor or the Gorman-Rupp Company.

Record keeping is an essential component of a good preventive maintenance program. Changes in suction and discharge gauge readings (if so equipped) between regularly scheduled inspections can indicate problems that can be corrected before system damage or catastrophic failure occurs. The appearance of wearing parts should also be documented at each inspection for comparison as well. Also, if records indicate that a certain part (such as the seal) fails at approximately the same duty cycle, the part can be checked and replaced before failure occurs, reducing unscheduled down time.

For new applications, a first inspection of wearing parts at 250 hours will give insight into the wear rate for your particular application. Subsequent inspections should be performed at the intervals shown on the chart below. Critical applications should be inspected more frequently.

Preventive Maintenance Schedule

Item	Service Interval*				
	Daily	Weekly	Monthly	Semi-Annually	Annually
General Condition (Temperature, Unusual Noises or Vibrations, Cracks, Leaks, Loose Hardware, Etc.)	I				
Pump Performance (Gauges, Speed, Flow)	I				
Bearing Lubrication		I			R
Seal Lubrication (And Packing Adjustment, If So Equipped)		I			R
V-Belts (If So Equipped)			I		
Air Release Valve Plunger Rod (If So Equipped)			I	C	
Front Impeller Clearance (Wear Plate)				I	
Rear Impeller Clearance (Seal Plate)				I	
Check Valve					I
Pressure Relief Valve (If So Equipped)					C
Pump and Driver Alignment					I
Shaft Deflection					I
Bearings					I
Bearing Housing					I
Piping					I
Driver Lubrication — See Mfgr's Literature					

Legend:
I = Inspect, Clean, Adjust, Repair or Replace as Necessary
C = Clean
R = Replace

* Service interval based on an intermittent duty cycle equal to approximately 4000 hours annually. Adjust schedule as required for lower or higher duty cycles or extreme operating conditions.

PUMP MAINTENANCE AND REPAIR — SECTION E

MAINTENANCE AND REPAIR OF THE WEARING PARTS OF THE PUMP WILL MAINTAIN PEAK OPERATING PERFORMANCE.

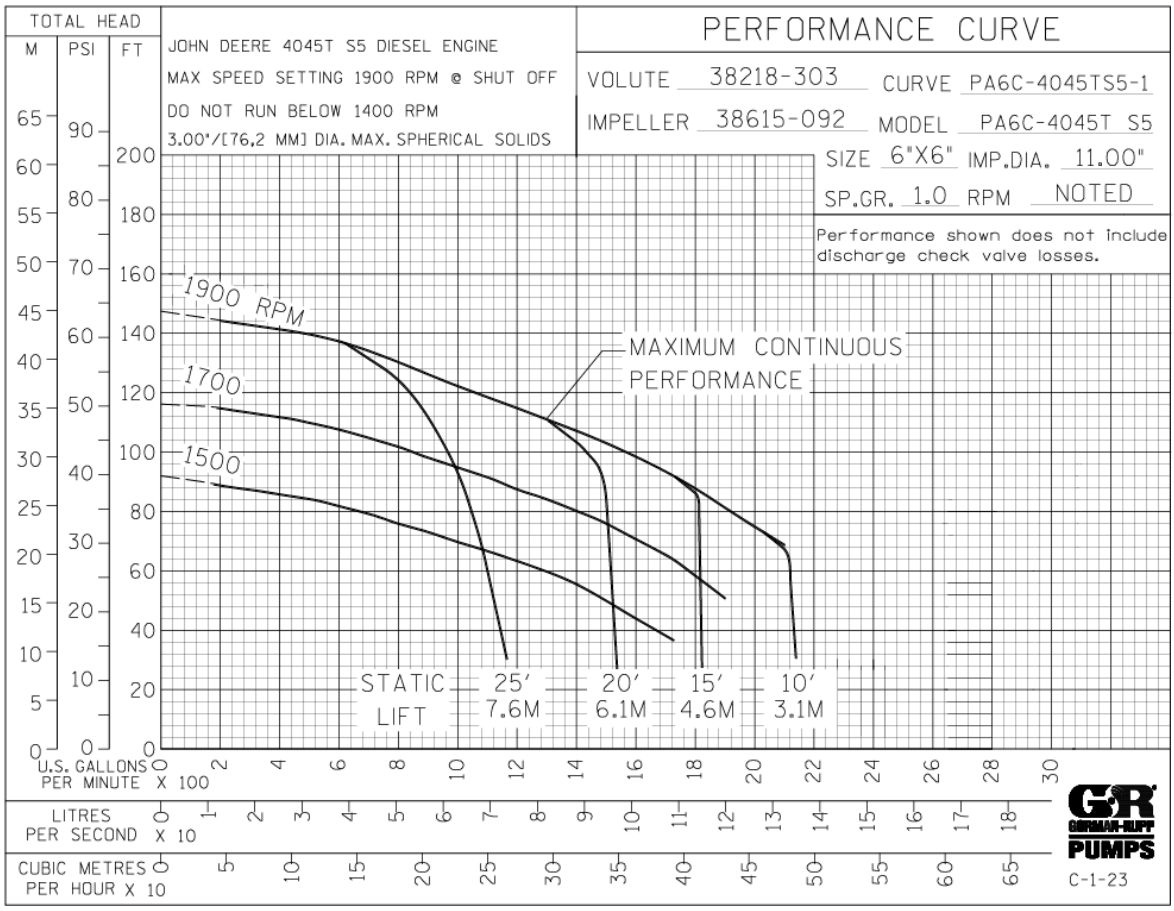

✳ **STANDARD PERFORMANCE FOR PUMP MODEL PA6C60—4045T S5**

✳ Based on 70°F (21°C) clear water at sea level with minimum suction lift. Since pump installations are seldom identical, your performance may be different due to such factors as viscosity, specific gravity, elevation, temperature, and impeller trim.

CAUTION

Pump speed and operating condition points must be within the continuous performance range shown on the curve.

ILLUSTRATION

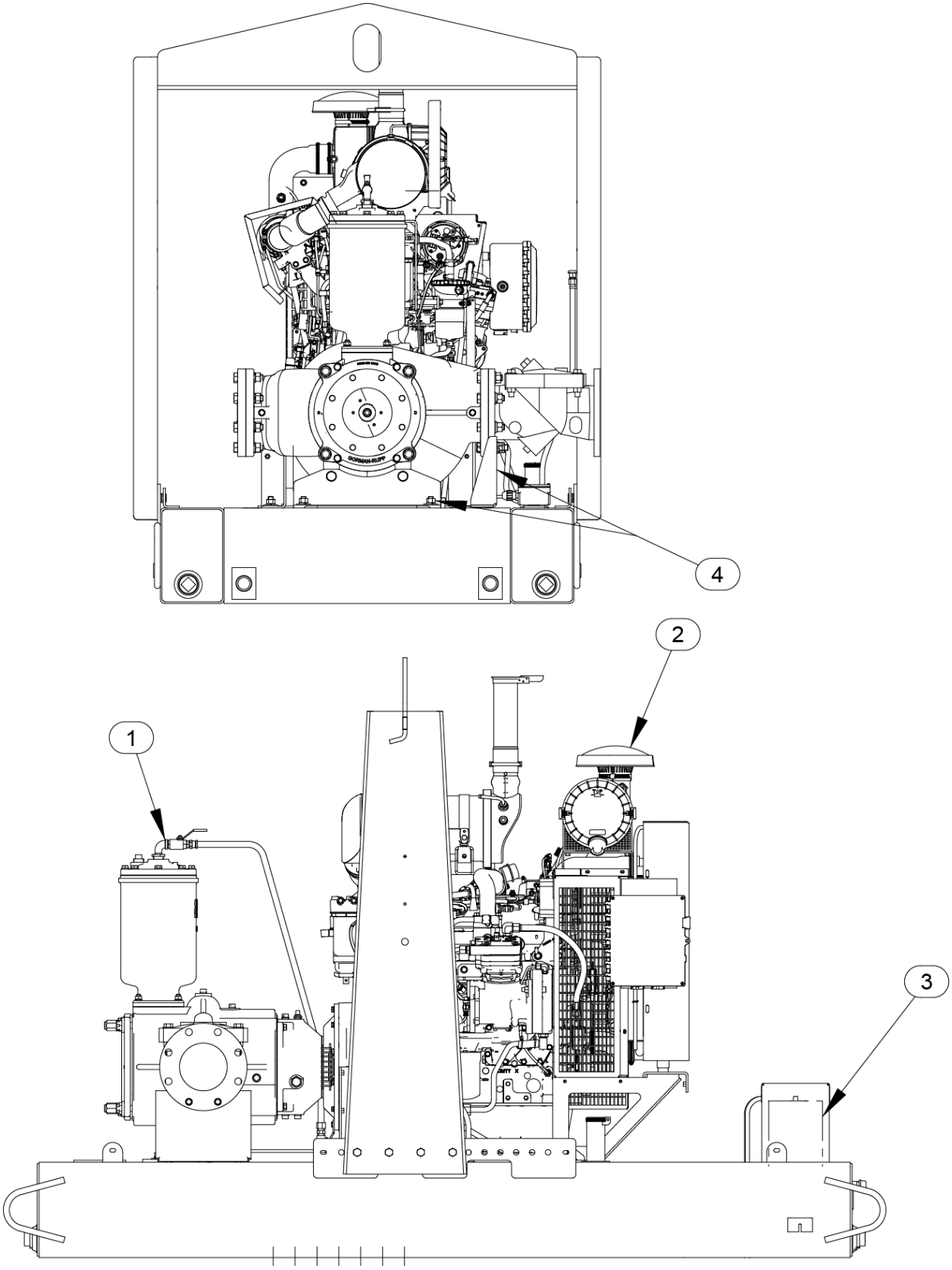

Figure 1. Pump Model PA6C60−4045T S5

Pump Model PA6C60—4045T S5

PARTS LIST

(From S/N 1851882 Up)

ITEM NO.	PART NAME	PART NUMBER	QTY
1	PUMP END ASSEMBLY	46183—230	1
2	POWER UNIT KIT	46143—273	1
3	BATTERY	SEE OPTIONS	REF
4	PUMP MOUNTING KIT	48157—114	1
NOT SHOWN:			
	PRIME AIRE DECAL	38812—078	2
	CAUTION DECAL	2613FJ	1
	G-R DECAL	GR—06	2
OPTIONAL:			
	BATTERY 12V	29331—527	1

ILLUSTRATION

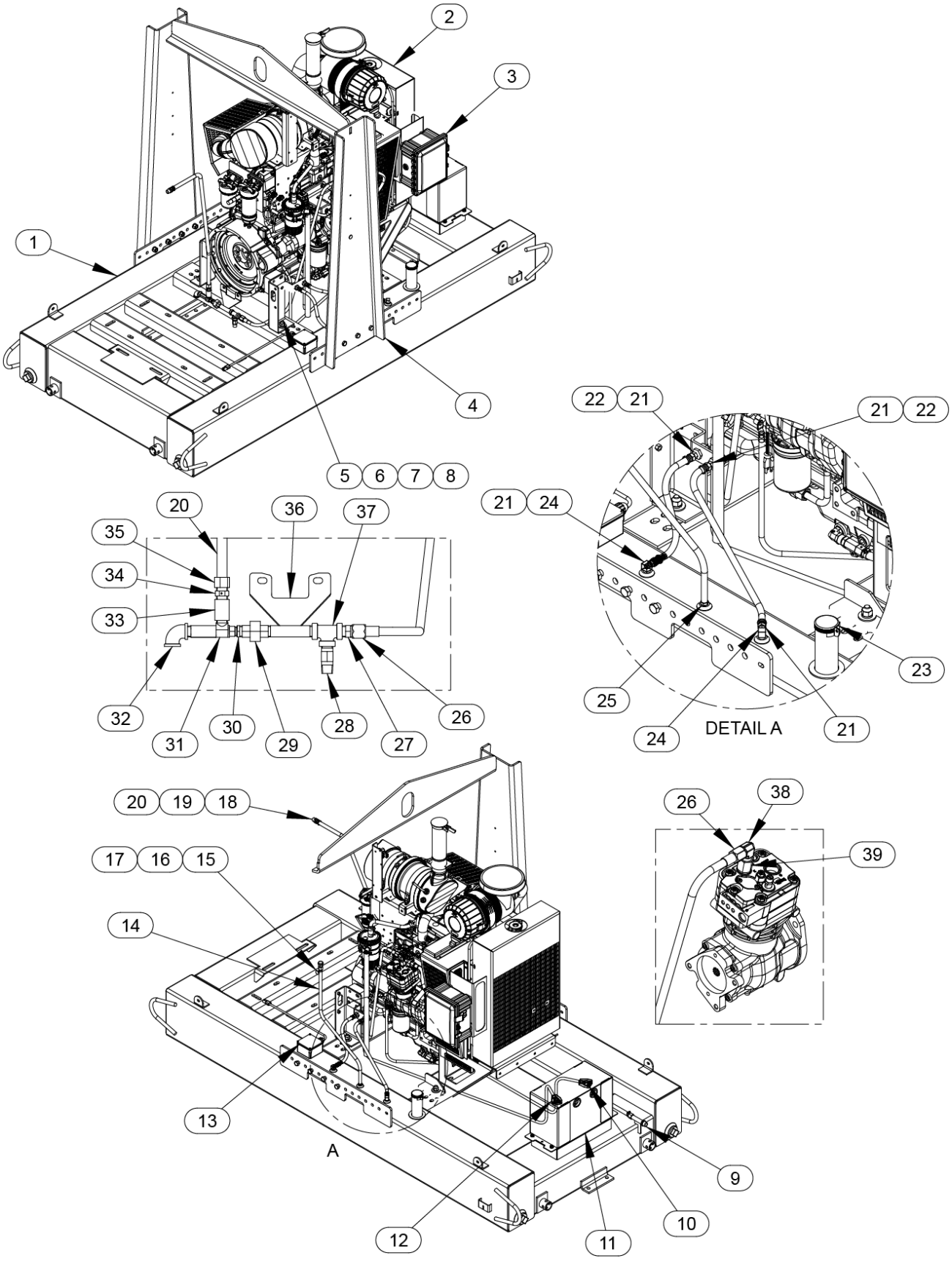

Figure 2. Power Unit Kit

PARTS LIST
Power Unit Kit

ITEM NO.	PART NAME	PART NUMBER	QTY
1	BASE/FUEL TANK ASSY	41553-072 24150	1
2	JD 4045T S5 ENGINE	29224-488	1
3	CNTRL PNL INSTALL KIT	48122-607	1
4	LIFTING BAIL KIT	48274-815	1
5	HEX HEAD CAP SCREW	B1008 15991	4
6	HEX NUT	D10 15991	4
7	LOCK WASHER	J10 15991	4
8	FLAT WASHER	K10 15991	8
9	OIL DRAIN ASSY	46342-031	1
10	1/0 POS. CABLE ASSY	47311-113	1
11	BATT BOX ENCLOSURE	42432-013	1
12	1/0 NEG. CABLE ASSY	47311-133	1
13	FUEL SENDING UNIT KIT	48122-939	1
14	HOSE .37 ID x 36" LG	18513-302	1
15	CABLE TIE	27111-218	1
16	HOSE BARB FITTING	26523-447	1
17	AIR VENT	S1703	1
18	CONNECTOR	S1598	1
19	HOSE BARB FTG	26523-047	1
20	HOSE .50 ID x 42" LG	18513-113	1
21	CONNECTOR	S1447	4
22	HOSE ASSY	46341-815	2
23	LOCKING FUEL CAP	29332-111	1
24	FUEL PICKUP	29332-145	2
25	HOSE BARB FTG	26523-389	1
26	HOSE ASSY	46341-426	1
27	CONNECTOR	26351-065	1
28	PRESS RELIEF VLV	26662-028	1
29	PIPE UNION	AH08 11999	1
30	PIPE BUSHING	AP0806 15079	1
31	VENTURI	26817-002	1
32	PIPE ELBOW	R08 11999	1
33	PIPE CPLG	AE08 15079	1
34	CHECK VLV	26641-092	1
35	HOSE BARB FTG	26523-446	1
36	VENTURI MTG BRKT	41888-199	1
37	PIPE TEE	U08 11999	1
38	MALE ELBOW	26341-310	1
39	HEX ADAPTER	26523-188	1
NOT SHOWN:			
	FUEL DECAL	38816—196	1
	INSTRUCTION DECAL	38818—144	1
	FLOAT SWITCH	48312—712	1
	WARNING DECAL	38816—271	1
	ENG OPERATING DECAL	38816—347	1
	WARNING DECAL	38817—101	2
	WARNING DECAL	2613FE	1
	ENGINE START—UP TAG	38816—269	1
	WARNING DECAL	38816—203	4

ILLUSTRATION

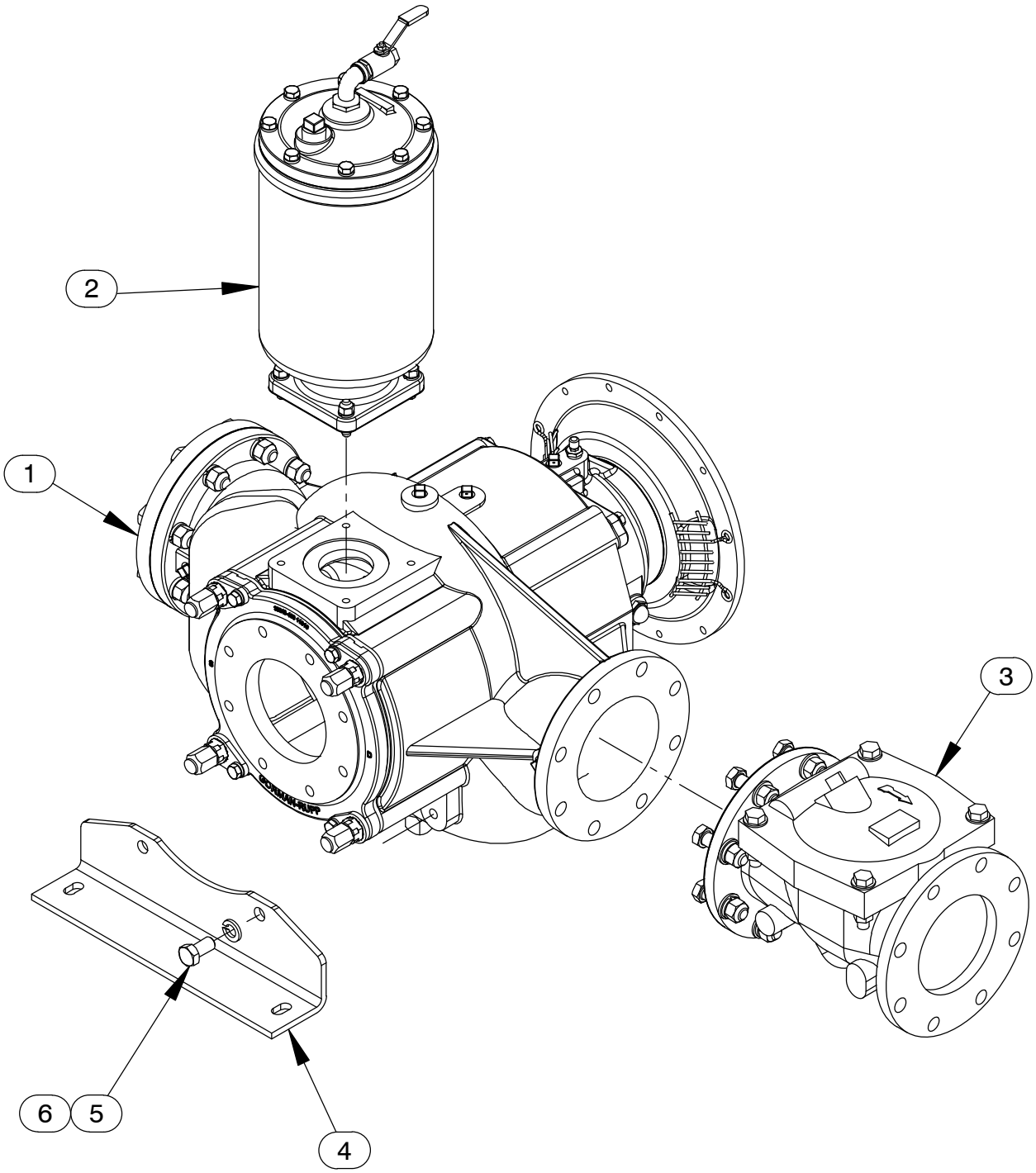

Figure 3. Pump End Assembly

Pump Assembly

PARTS LIST

ITEM NO.		PART NAME	PART NUMBER	QTY
1		PUMP END ASSEMBLY	66F60-(SAE4/10)	1
2		PRIMING CHAMBER KIT	48275–005	1
3		CHECK VALVE KIT 6”	48274–015	1
		–CHECK VALVE	26642–146	1
	✳	––FLAPPER	26688–001	1
	✳	––COVER O-RING	25152–377	1
4		PUMP SUPPORT BRACKET	34265–051 15080	1
5		HEX HEAD CAP SCREW	B1206 15991	2
6		LOCK WASHER	J12 15991	2

✳ INDICATES PARTS RECOMMENDED FOR STOCK

ILLUSTRATION

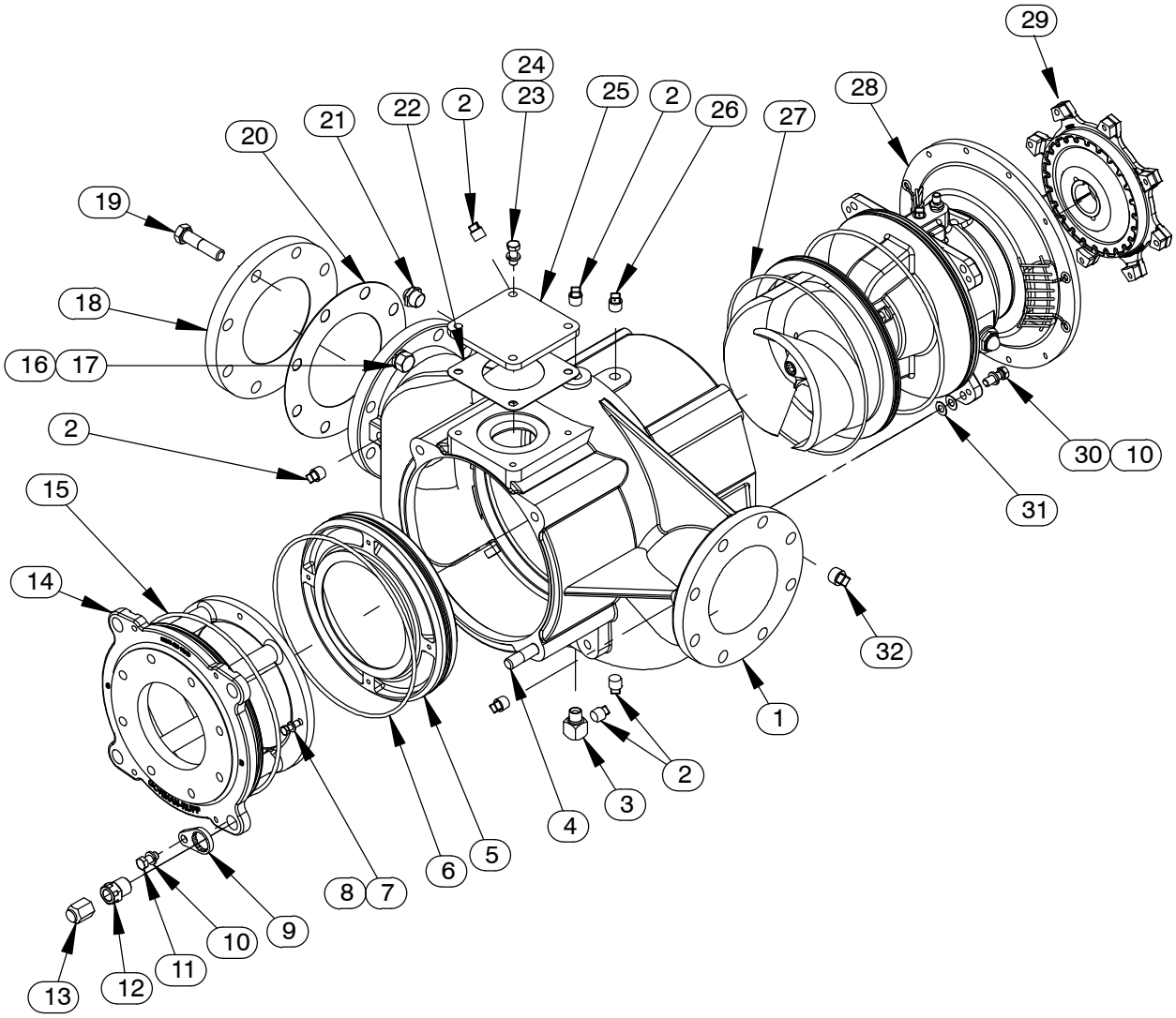

Figure 4. Pump Subassembly

PARTS LIST
Pump Subassembly

	ITEM NO.		PART NAME	PART NUMBER	QTY
☞	1		PUMP CASING	SEE NOTE BELOW	1
☞	2		PIPE PLUG	P08 15079	6
	3		STREET ELBOW 1/2”	25412–004	1
☞	4		STUD	C1213 15991	4
	5	✳	WEAR PLATE	38691–864 11010	1
	6	✳	O-RING	25152–453	1
	7		LOCK WASHER	J06 17090	4
	8		HEX HEAD CAP SCREW	B0604–1/2 17000	4
	9		LOCK COLLAR	38115–551 15001	4
	10		LOCK WASHER	J08 15991	8
	11		HEX HEAD CAP SCREW	B0804–1/2 15991	4
	12		ADJUSTING SCREW	31871–070 1500G	4
	13		BACK COVER NUT	31871–073 15000	4
	14		BACK COVER PLATE	38243–468 11010	1
	15	✳	O-RING	S1676	2
	16		LOCK WASHER	J12 15991	8
	17		HEX NUT	D12 15991	8
	18		BLIND FLANGE ASSEMBLY	42111–349	1
	19		HEX HEAD CAP SCREW	B1213 15991	8
	20	✳	GASKET 6”	25113–036	1
	21		SIGHT GAUGE	S1471	1
	22	✳	GASKET	38687–053 19060	1
	23		HEX HEAD CAP SCREW	B0805 15991	4
	24		LOCK WASHER	J08 15991	4
	25		COVER PLATE	33541–045 15080	1
	26		VENTED PIPE PLUG	4823A 15079	1
	27	✳	O-RING	25152–381	1
	28		REPAIR ROTATING ASSEMBLY	44163–430	1
	29		DRIVE ASSEMBLY	44162–187	1
	30		HEX HEAD CAP SCREW	B0806 15991	4
	31		SHIM	13131–3 17040	8
	32		PIPE PLUG	P12 15079	1
NOT SHOWN:					
			OIL LEVEL DECAL	38816–123	1
			DRIVE SCREW	BM#04–03 17000	4
			NAMEPLATE BLANK	38819–002 13000	1
			SUCTION STICKER	6588AG	1
			DISCHARGE STICKER	6588BJ	1
			G–R DECAL 6 IN	GR–06	1
			LUBRICATION DECAL	11421A	1
			INSTRUCTION TAG	38817–085	1
			WARNING DECAL	2613FE	1
☞			INCLUDED W/REPAIR PUMP CASING ASSY	46474–903	1

✳ INDICATES PARTS RECOMMENDED FOR STOCK

ILLUSTRATION

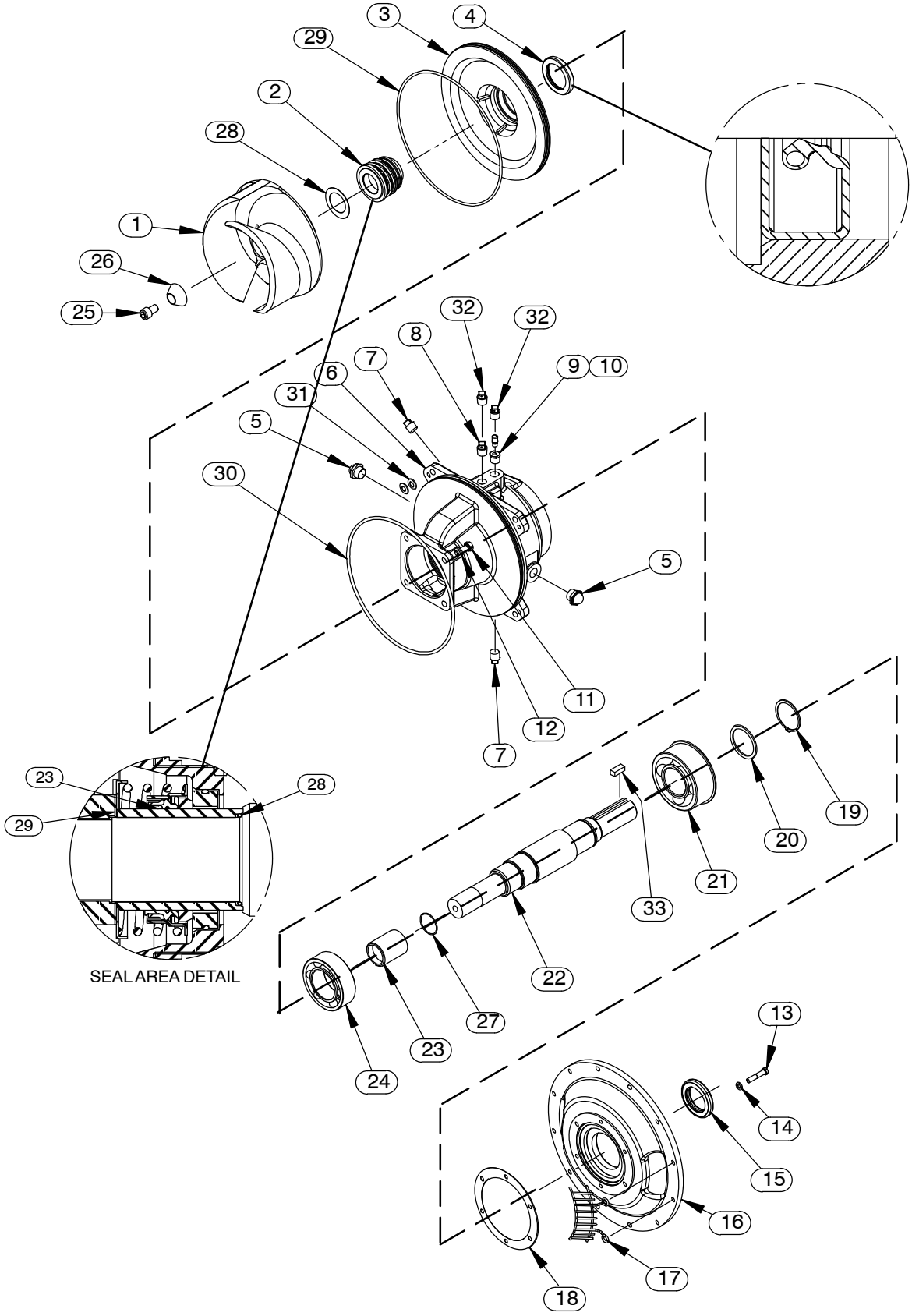

Figure 5. Repair Rotating Assembly

PARTS LIST
Repair Rotating Assembly

ITEM NO.		PART NAME	PART NUMBER	QTY
1	✳	IMPELLER — HIGH HEAD	38615—092 11010	1
2	✳	SEAL ASSEMBLY	46512—149	1
3		SEAL PLATE	38272—256 10000	1
4	✳	OIL SEAL	25227—771	1
5		SIGHT GAUGE	S1471	2
6		BEARING HOUSING	38251—513 10000	1
7		PIPE PLUG	P08 15079	3
8		VENTED PIPE PLUG	4823A 15079	1
9		REDUCER PIPE BUSHING	AP0802 15079	1
10		AIR VENT	S1530	1
11		HEX HEAD CAP SCREW	B0805—1/2 15991	4
12		LOCK WASHER	J08 15991	4
13		HEX HEAD CAP SCREW GRADE 8	21632—938	6
14		LOCK WASHER	J06 15991	6
15	✳	OIL SEAL	S1907	1
16		DRIVE FLANGE	38545—004 10000	1
17		INTERMEDIATE GUARD	42381—509 24152	2
18	✳	GASKET	38683—474 18000	1
19		RETAINING RING	S720	1
20		THRUST WASHER	31134—115 15000	1
21	✳	BALL BEARING	23422—414	1
22	✳	IMPELLER SHAFT	38515—592 1706H	1
23		SHAFT SLEEVE	31163—019 1706H	1
24	✳	BALL BEARING	23422—019	1
25		SOCKET HEAD CAP SCREW	DM1004S 17090	1
26		IMPELLER WASHER	31514—015 17000	1
27	✳	O-RING	25154—131	REF
28	✳	ADJ SHIM SET	48261—057	REF
29	✳	O-RING	25152—381	1
30	✳	O-RING	S1676	1
31	✳	ADJ SHIM	13131—3 17040	12
32		SHIPPING PLUG	11495B 15079	2
33	✳	KEY	24113—603	1
NOT SHOWN:				
		INSTRUCTION TAG	6588U	1
		WARNING DECAL	38817—102	1

✳ INDICATES PARTS RECOMMENDED FOR STOCK

ILLUSTRATION

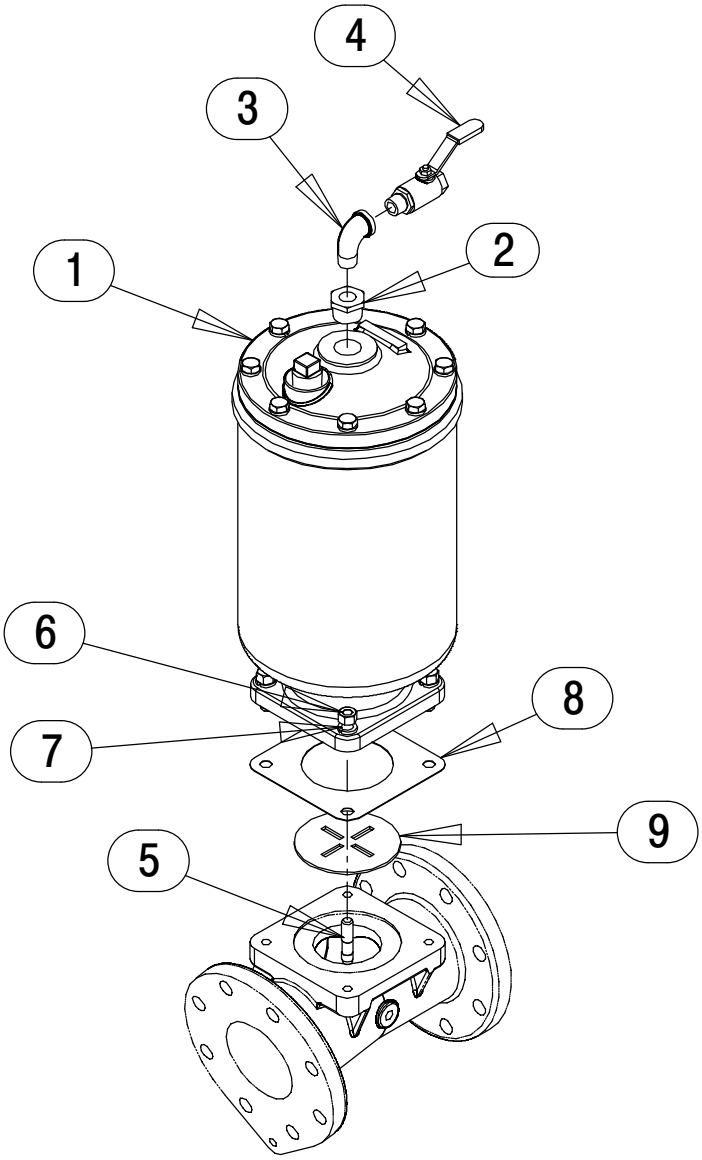

Figure 6. Priming Chamber Kit

PARTS LIST

ITEM NO.		PART NAME	PART NUMBER	QTY
1		PRIMING CHAMBER ASSY	46112−709	1
2		PIPE BUSHING	AP1608 15070	1
3		STREET ELBOW	RS08 11999	1
4		BALL VALVE	26631−052	1
5		STUD	C0809 15991	4
6		HEX NUT	D08 15991	4
7		LOCK WASHER	J08 15991	4
8	✳	GASKET	38687−053 19060	1
9		BAFFLE	31113−011 17000	1

✳ INDICATES PARTS RECOMMENDED FOR STOCK

ILLUSTRATION

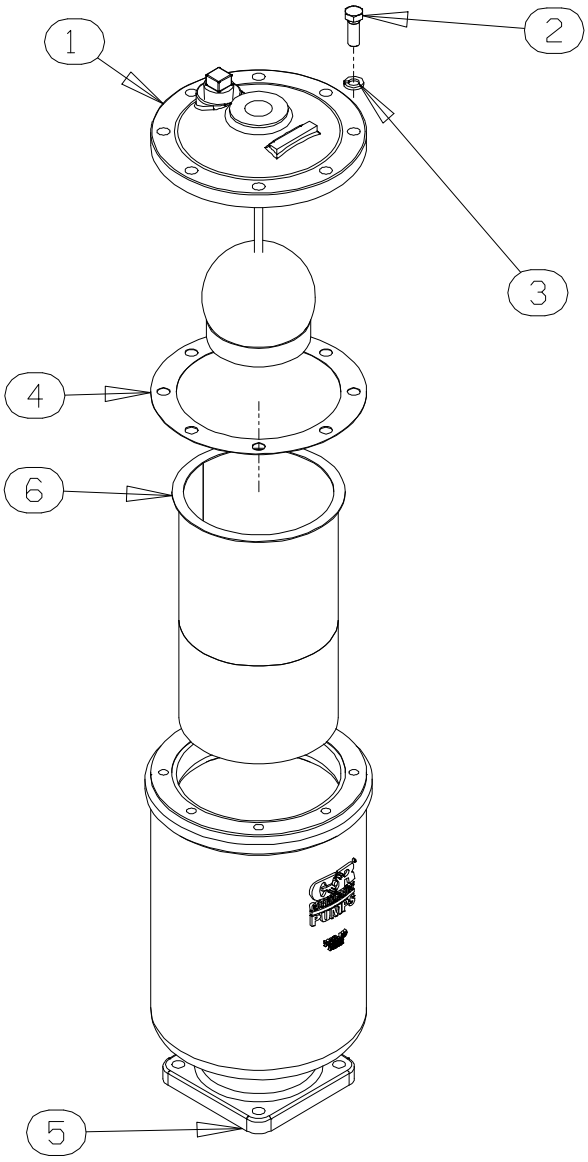

Figure 7. Priming Chamber Assembly

PARTS LIST

ITEM NO.		PART NAME	PART NUMBER	QTY
1		PRIMING VALVE	26664−007	1
		−ORIFICE BUTTON	26688−021	1
2		HEX HEAD CAP SCREW	B0806 15991	8
3		LOCK WASHER	J08 15991	8
4	✳	PRIMING VALVE GASKET	38683−657 19060	1
5		PRIMING CHAMBER	38343−020 10000	1
6		STRAINER ASSEMBLY	46641−222 17000	1

✳ INDICATES PARTS RECOMMENDED FOR STOCK

ILLUSTRATION

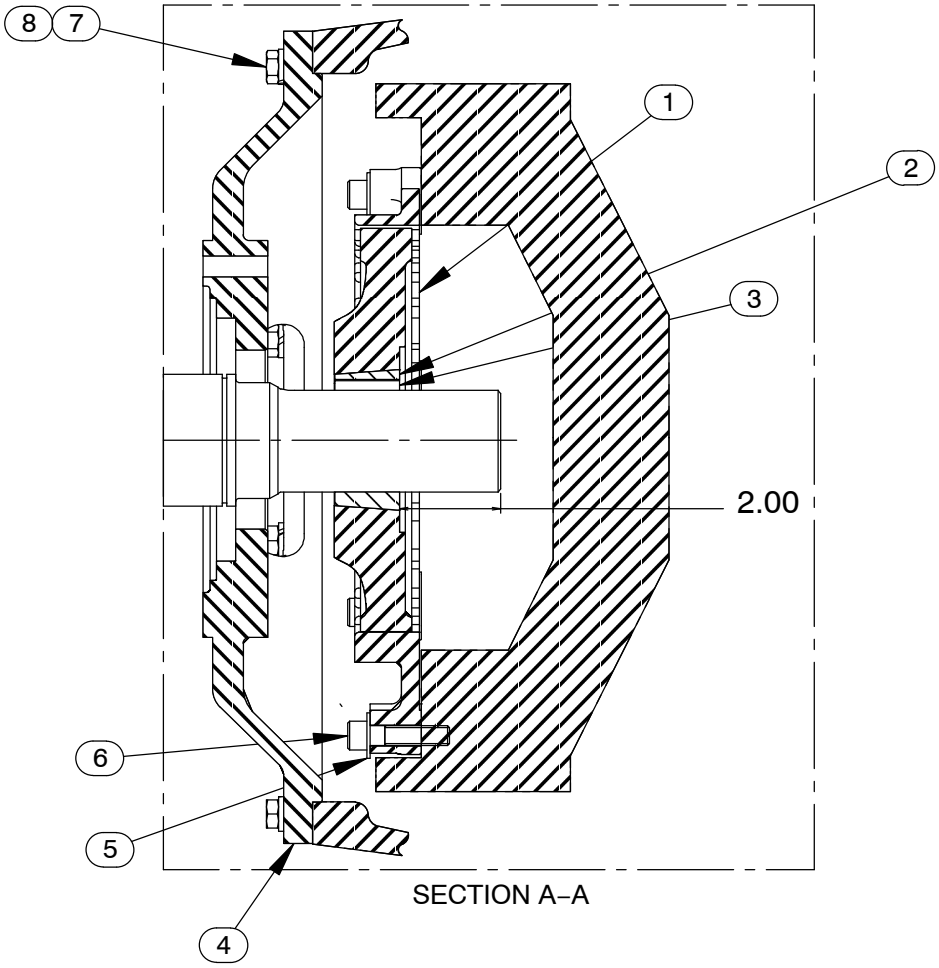

Figure 8. Drive Assembly

PARTS LIST

ITEM NO.		PART NAME	PART NUMBER	QTY
1		COUPLING W/O BUSHING	24391−177	1
2		BUSHING	24131−498	1
3		−KEY	24113−603	REF
4		DRIVE FLANGE	38545−004 10000	REF
5		FLAT WASHER	21161−828	8
6	☞	SOC HD CAPSCREW	BD0606−1/2 15991	8
6	◆	SOC HD CAPSCREW	22644−220	8
7	☞	HEX HD CAPSCREW	B0605 15991	12
7	◆	HEX HD CAPSCREW	22645−164	12
8	☞	LOCK WASHER	J06 15991	12
8	◆	LOCK WASHER	21171−511	12

☞ USE FOR SAE APPLICATIONS
◆ USE FOR METRIC APPLICATIONS

PUMP AND SEAL DISASSEMBLY AND REASSEMBLY

Review all SAFETY information in Section A.

Follow the instructions on all tags, label and decals attached to the pump.

This pump requires little service due to its rugged, minimum-maintenance design. However, if it becomes necessary to inspect or replace the wearing parts, follow these instructions which are keyed to the Illustrations (see Figures 1 through and 8) and the corresponding Parts Lists. Maintenance and repair instructions for the engine is covered separately in the specific literature supplied by the manufacturer.

Many pump service functions may be performed without separating the pump end assembly from the engine. However, the priming chamber assembly (2, Figure 3) and discharge check valve assembly (3, Figure 3) must be removed to service most pump components. The following instructions assume complete disassembly of the pump is required.

Before attempting to service the pump, shut down the engine and take precautions to ensure that it will remain inoperative. Close all valves in the suction and discharge lines and drain the pump casing by removing the lower most pipe plug (2, Figure 4). Clean and reinstall the drain plug.

WARNING!

This manual will alert personnel to known procedures which require special attention, to those which could damage equipment, and to those which could be dangerous to personnel. However, this manual cannot possibly anticipate and provide detailed instructions and precautions for every situation that might occur during maintenance of the unit. Therefore, it is the responsibility of the owner/maintenance personnel to ensure that only safe, established maintenance procedures are used, and that any procedures not addressed in this manual are performed only after establishing that neither personal safety nor pump integrity are compromised by such practices.

WARNING!

Before attempting to open or service the pump:

1. **Familiarize yourself with this manual.**
2. **Shut down the engine, disconnect the positive battery cable and take precautions to ensure that the pump will remain inoperative.**
3. **Allow the pump to completely cool if overheated.**
4. **Check the temperature and make sure it is cool before opening any covers, plates, gauges, or plugs.**
5. **Close the suction and discharge valves.**
6. **Vent the pump slowly and cautiously.**
7. **Drain the pump.**

WARNING!

This pump may be used to handle materials which could cause illness through direct exposure or emitted fumes. Wear adequate protective clothing when working on the pump or piping.

CAUTION

Use **Only Genuine Gorman—Rupp** replacement parts. Failure to do so may create a hazard and damage the pump or diminish optimal pump performance. Any such hazard, damage or diminished performance is not covered by the warranty.

NOTE

When appropriate recycling facilities are available, the user should recycle components and fluids when doing any routine maintenance / repairs and also at the end of the pump's useful life. All other components and fluids shall be disposed of according to all applicable codes and regulations.

Priming Chamber Removal And Disassembly

(Figure 6)

Disconnect both the suction piping and the air discharge tubing from the priming chamber assembly (1). Support the priming chamber assembly using a sling and a suitable lifting device. Remove the hardware (6 and 7) and separate the priming chamber assembly, baffle (9) and gasket (8) from the pump assembly.

(Figure 7)

Remove the hardware (2 and 3) securing the priming valve (1) to the priming chamber (5). Carefully lift the valve components from the priming chamber. Remove the gasket (4) and clean the mating surfaces.

If the priming valve float is stuck or the strainer (6) is clogged, it can usually be cleaned without further disassembly.

The only serviceable part of the priming valve is the orifice button (not shown). If liquid continues to bypass through the priming chamber after adjusting the orifice button (see **Priming Chamber Reassembly and Installation** for adjustment), the button may require replacement. To replace the orifice button, remove one of the "e-clips" from the pivot pin closest to the orifice button and remove the pivot pin. This will allow the linkage to be raised high enough to access the orifice button.

Remove the hex nut and lock washer securing the orifice button to the linkage bar and unscrew the orifice button from the linkage bar.

Discharge Check Valve Removal and Disassembly

(Figure 3)

Remove the hardware (not shown) securing the discharge check valve bracket to the base.

Support the discharge check valve (3) using a sling and a suitable lifting device. Remove the hardware (not shown) and separate the discharge check valve assembly and gasket from the pump assembly (1).

The flapper and cover O-ring are the only serviceable parts of the check valve. If the flapper requires replacement, remove the hardware securing the cover and O-ring. Separate the valve cover and remove the flapper.

Back Cover Plate and Wear Plate Removal

(Figure 4)

The wear plate (5) is easily accessible and may be serviced by removing the back cover plate (14). Before attempting to service the pump, remove the pump casing drain plug (2) and drain the pump. Clean and reinstall the drain plug.

Remove the back cover nuts (13) and pry the back cover and assembled wear plate from the pump casing (1).

NOTE

An alternate method of removing the back cover from the pump casing is to remove the back cover nuts (13) and two diagonally opposing locking collars (9). Use the adjusting screws (12) to press the back cover out of the pump casing.

Remove and discard the O-rings (15 and 27).

Inspect the wear plate and, if replacement is required, remove the hardware (7 and 8) securing it to the back cover plate.

Separating Pump And Drive Assembly From Engine

(Figure 8)

Further disassembly of the pump requires separating the pump end and drive assembly from the en-

gine. Disconnect the discharge piping from the pump casing.

Remove the hardware (7 and 8) securing the drive flange (4) to the engine bellhousing. Separate the assemblies by pulling the pump end straight away from the engine.

As the assemblies separate, the flexible portion of the coupling (1) will remain on the shaft. To remove the coupling from the shaft, unscrew the two allen head setscrews from the bushing (2). Screw one of the setscrews into the puller hole on the circumference of the bushing. As the coupling and bushing separate, remove the bushing, and slide the coupling off the shaft. Remove the shaft key (3).

It is not necessary to remove the outer ring of the coupling from the engine flywheel unless the coupling must be replaced. To remove the ring, disengage the hardware (5 and 6) securing it to the flywheel.

Move the pump end to a clean, well equipped shop area for further disassembly.

Draining Oil From Seal Cavity

(Figure 4)

If any further disassembly is to be performed on the pump, the seal oil cavity must be drained to prevent the oil in the seal cavity from escaping as the pump casing is removed.

Position a **clean** container (3 gallons [11,4 liters] minimum capacity) under the seal cavity drain plugs (2, Figure 4). Remove the plug and drain the oil from the seal cavity into the container. For shorter drain time, remove the vented plugs (26). Clean and reinstall the drain and vent plugs. Inspect the oil for water, dirt or a cloudy condition which could indicate seal failure.

Loosening Impeller

(Figure 5)

With the pump end separated from the engine, wedge a block of wood between the vanes of the impeller and the pump casing to prevent rotation. Remove the impeller capscrew and washer (25 and 26).

Install the shaft key (33) in the shaft keyway. Install a lathe dog on the drive end of the shaft (22) with the “V” notch positioned over the shaft key.

With the impeller rotation still blocked, see Figure 9 and use a long piece of heavy bar stock to pry against the arm of the lathe dog in a counterclockwise direction (when facing the drive end of the shaft). **Use caution** not to damage the shaft or keyway. When the impeller breaks loose, remove the lathe dog, key and wood block.

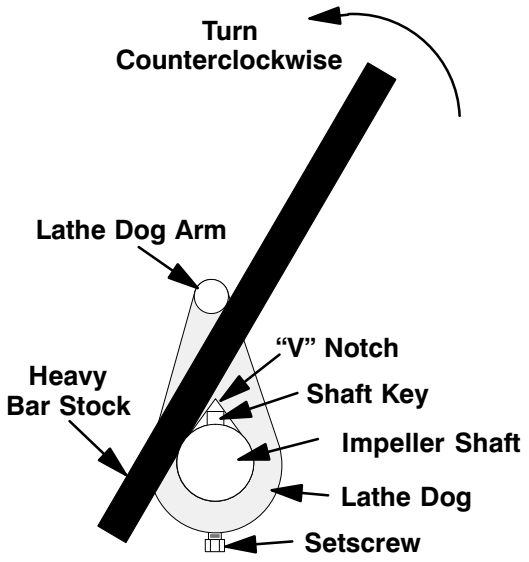

Figure 9. Loosening Impeller

NOTE

Do not remove the impeller until the rotating assembly has been removed from the pump casing.

Pump Casing Removal

(Figure 4)

Support the pump casing using a suitable hoist and sling, and remove the hardware (10 and 30). Install four 1/2—13 UNC x 2-inch long jacking screws in the tapped holes in the bearing housing (6, Figure 5). Tighten the jacking screws in an alternating pattern until the pump casing is pushed off of the bearing housing. Remove the jacking screws and shims (31).

Impeller Removal

(Figure 5)

With the rotating assembly removed from the pump casing, unscrew the impeller (1) in a counterclockwise direction (when facing the impeller). Use caution when unscrewing the impeller; tension on the shaft seal spring will be released as the impeller is removed. Inspect the impeller and replace if cracked or badly worn.

Remove the impeller adjusting shims (28); tie and tag the shims, or measure and record their thickness for ease of reassembly.

Seal Removal

(Figures 5 and 10)

Remove the spring centering washer and seal spring. Slide the shaft sleeve (23) and rotating portion of the seal (consisting of the bellows, retainer, and rotating element) off the shaft as a unit.

Apply oil to the sleeve and work it up under the rubber bellows. Slide the rotating portion of the seal off the sleeve.

Slide a pair of stiff wires with hooked ends along the shaft and hook the stationary seat from the back side. Pull the stationary seat and O-ring from the seal plate.

An alternate method of removing the stationary seal components is to remove the hardware (11 and 12) and separate the seal plate from the bearing housing (6). Position the seal plate on a flat surface with the impeller side down. Use a wooden dowel or other suitable tool to press on the back side of the stationary seat until the seat and O-ring can be removed.

Remove the seal plate O-ring (29).

Remove the shaft sleeve O-ring (28).

If no further disassembly is required, refer to **Seal Installation**.

Shaft and Bearing Removal and Disassembly

(Figure 5)

When the pump is properly operated and maintained, the bearing housing should not require disassembly. Disassemble the shaft and bearings **only** when there is evidence of wear or damage.

CAUTION

Shaft and bearing disassembly in the field is not recommended. These operations should be performed only in a properly-equipped shop by qualified personnel.

Remove the bearing housing drain plug (7) and drain the lubricant. Clean and reinstall the drain plug.

Disengage the hardware (13 and 14) and remove the drive flange (16), gasket (18) and oil seal (15). Use a suitably sized dowel to press the oil seal from the drive flange.

Place a block of wood against the impeller end of the shaft (22) and tap the shaft and assembled bearings from the intermediate. Press the inboard oil seal (4) out of the bearing housing.

Remove the bearing housing O-ring (30).

After removing the shaft and bearings, clean and inspect the bearings **in place** as follows.

CAUTION

To prevent damage during removal from the shaft, it is recommended that bearings be cleaned and inspected **in place**. It is **strongly** recommended that the bearings be replaced **any** time the shaft and bearings are removed.

Clean the bearing housing, shaft and all component parts (except the bearings) with a soft cloth soaked in cleaning solvent. Inspect the parts for wear or damage and replace as necessary.

WARNING!

Most cleaning solvents are toxic and

flammable. Use them only in a well ventilated area free from excessive heat, sparks, and flame. Read and follow all precautions printed on solvent containers.

Clean the bearings thoroughly in **fresh** cleaning solvent. Dry the bearings with filtered compressed air and coat with light oil.

CAUTION

Bearings must be kept free of all dirt and foreign material. Failure to do so will greatly shorten bearing life. **Do not** spin dry bearings. This may scratch the balls or races and cause premature bearing failure.

Rotate the bearings by hand to check for roughness or binding and inspect the bearing balls. If rotation is rough or the bearing balls are discolored, replace the bearings.

The bearing tolerances provide a tight press fit onto the shaft and a snug slip fit into the bearing housing. Replace the bearings, shaft, or bearing housing if the proper bearing fit is not achieved.

If bearing replacement is required, remove the snap ring and thrust washer (19 and 20) and use a bearing puller to remove the inboard and outboard bearings (21 and 24) from the shaft.

Shaft and Bearing Reassembly and Installation

(Figure 5)

Inspect the shaft for distortion, nicks or scratches, or for thread damage on the impeller end. Dress small nicks and burrs with a fine file or emery cloth. Replace the shaft if defective.

Clean and inspect the bearings as indicated in **Shaft And Bearing Removal And Disassembly**.

CAUTION

To prevent damage during removal from the shaft, it is recommended that bearings be cleaned and inspected **in place**. It is **strongly** recommended that the bearings be replaced **any** time the shaft and bearings are removed.

NOTE

The inboard bearing (24) comes from the manufacturer with a retaining ring installed on the bearing O.D. This retaining ring ***must*** *be removed prior to installation. Position the outboard bearing (21) on the shaft with the integral retaining ring toward the drive end of the shaft.*

The bearings may be heated to ease installation. An induction heater, hot oil bath, electric oven, or hot plate may be used to heat the bearings. Bearings should **never** be heated with a direct flame or directly on a hot plate.

NOTE

If a hot oil bath is used to heat the bearings, both the oil and the container must be **absolutely** *clean. If the oil has been previously used, it must be* **thoroughly** *filtered.*

Heat the bearings to a uniform temperature **no higher than** 250°F (120°C), and slide the bearings onto the shaft, one at a time, until they are fully seated. This should be done quickly, in one continuous motion, to prevent the bearings from cooling and sticking on the shaft.

After the bearings have been installed and allowed to cool, check to ensure that they have not moved away from the shaft shoulders in shrinking. If movement has occurred, use a suitably sized sleeve and a press to reposition the bearings against the shaft shoulders.

If heating the bearings is not practical, use a suitably sized sleeve, and an arbor (or hydraulic) press to install the bearings on the shaft.

CAUTION

When installing the bearings onto the shaft, **never** press or hit against the outer race, balls, or ball cage. Press **only** on the inner race.

Install the thrust washer (20) and secure the outboard bearing (21) to the shaft with the snap ring (19).

Apply a light coating of oil to the lip of the inboard oil seal (4) and press it into the bearing housing with the lip positioned as shown in Figure 5. Press the oil seal into the housing until the face is **just flush** with the machined surface on the housing.

Slide the shaft and assembled bearings into the intermediate bore until the integral retaining ring on the O.D. of the outboard bearing is fully seated against the bearing housing shoulder. Use caution not to damage the lip seal (4) on the shaft threads.

CAUTION

When installing the shaft and bearings into the bearing bore, push against the outer race. **Never** hit the balls or ball cage.

Install the drive flange gasket (18) and secure the drive flange (16) to the bearing housing with the hardware (13 and 14).

Apply a light coating of oil to the lip of the oil seal (15) and press it into the drive flange with the lip positioned as shown in Figure 5. **Be careful** not to damage the lip of the oil seal (15) on the shaft keyway. The face of the oil seal should be just flush with the outer face of the drive flange.

Lubricate a new bearing housing O-ring (30) with grease and install it in the groove in the bearing housing.

Lubricate the bearings as indicated in **LUBRICATION** at the end of this section.

Securing Bearing Housing And Drive Assembly To Engine

(Figure 8)

Install the shaft key (33, Figure 5) in the shaft keyway. Position the flexible portion of the coupling (1) on the shaft as shown in Figure 8.

NOTE

The flexible portion of the coupling must be properly positioned on the shaft. The heads of the capscrews in the center of the coupling ***must be positioned toward the drive end of the shaft****.*

Align the keyway in the bushing (2) with the shaft key, and slide it onto the shaft to the dimension shown in Figure 8. Rotate the flexible portion of the coupling until the tapped holes for the two setscrews align with those in the bushing, and install the setscrews.

CAUTION

Make certain that the flexible portion of the coupling is mounted as shown in Figure 8. **This is critical.** If the coupling is not properly positioned on the shaft, the coupling parts may not fully engage, or a pre-load condition can cause premature bearing failure.

The coupling must be positioned **2.00 inches (50,8 mm)** from the end of the shaft. This will allow the two portions of the coupling to fully engage when the drive flange is secured to the engine bellhousing, without pre-loading the bearings.

With the flexible portion of the coupling and the bushing properly positioned on the shaft, tighten the two setscrews in an alternating sequence until the bushing and coupling are fully secured. Torque the setscrews to 23.3 ft. lbs. (280 in. lbs. or 3,2 m. kg.).

If the complete coupling assembly is being replaced, apply 'Loctite Retaining Compound No. 242' or equivalent to the threads of the hardware (5 and 6), and secure the outer ring of the coupling to the engine flywheel by torquing the hardware to 45 ft. lbs. (540 in. lbs. or 6,2 m. kg.).

Using a suitable lifting device, position the assembled rotating assembly and coupling so the flexible portion of the coupling seats inside the outer ring attached to the engine flywheel.

NOTE

To ease installation, ***lightly*** *lubricate the rubber portion of the coupling with a* ***non-petroleum based lubricant*** *such as vegetable oil or glycerin, or a silicon-based lubricant such as "WD40" or equivalent.*

***Do not** use petroleum-based lubricants, or any other substance which may soften or otherwise damage the rubber.*

Install the intermediate guards (17, Figure 5), and secure the drive flange (4) to the engine bellhousing with the previously removed hardware (7 and 8).

Seal Reassembly and Installation

(Figures 5 and 10)

WARNING!

Most cleaning solvents are toxic and flammable. Use them only in a well ventilated area free from excessive heat, sparks, and flame. Read and follow all precautions printed on solvent containers.

Clean the seal cavity and shaft with a cloth soaked in fresh cleaning solvent. Inspect the stationary seat bore in the seal plate for dirt, nicks and burrs, and remove any that exist. The stationary seat bore **must** be completely clean before installing the seal.

The seal is not normally reused because wear patterns on the finished faces cannot be realigned during reassembly. This could result in premature failure. If necessary to reuse an old seal in an emergency, **carefully** wash all metallic parts in **fresh** cleaning solvent and allow to dry thoroughly.

Handle the seal parts with extreme care to prevent damage. Be careful not to contaminate precision finished faces; even fingerprints on the faces can shorten seal life. If necessary, clean the faces with a non-oil based solvent and a clean, lint-free tissue. Wipe **lightly** in a concentric pattern to avoid scratching the faces.

Inspect the seal components for wear, scoring, grooves, and other damage that might cause leakage. Clean and polish the shaft sleeve, or replace it if there are nicks or cuts on either end. If any components are worn, replace the complete seal; **never mix old and new seal parts**.

If a replacement seal is being used, remove it from the container and inspect the precision finished faces to ensure that they are free of any foreign matter.

To ease installation of the seal, lubricate the shaft sleeve O-ring and the external stationary seat O-ring with a very **small** amount of “P—80® Emulsion” or water. See Figure 10 for seal part identification.

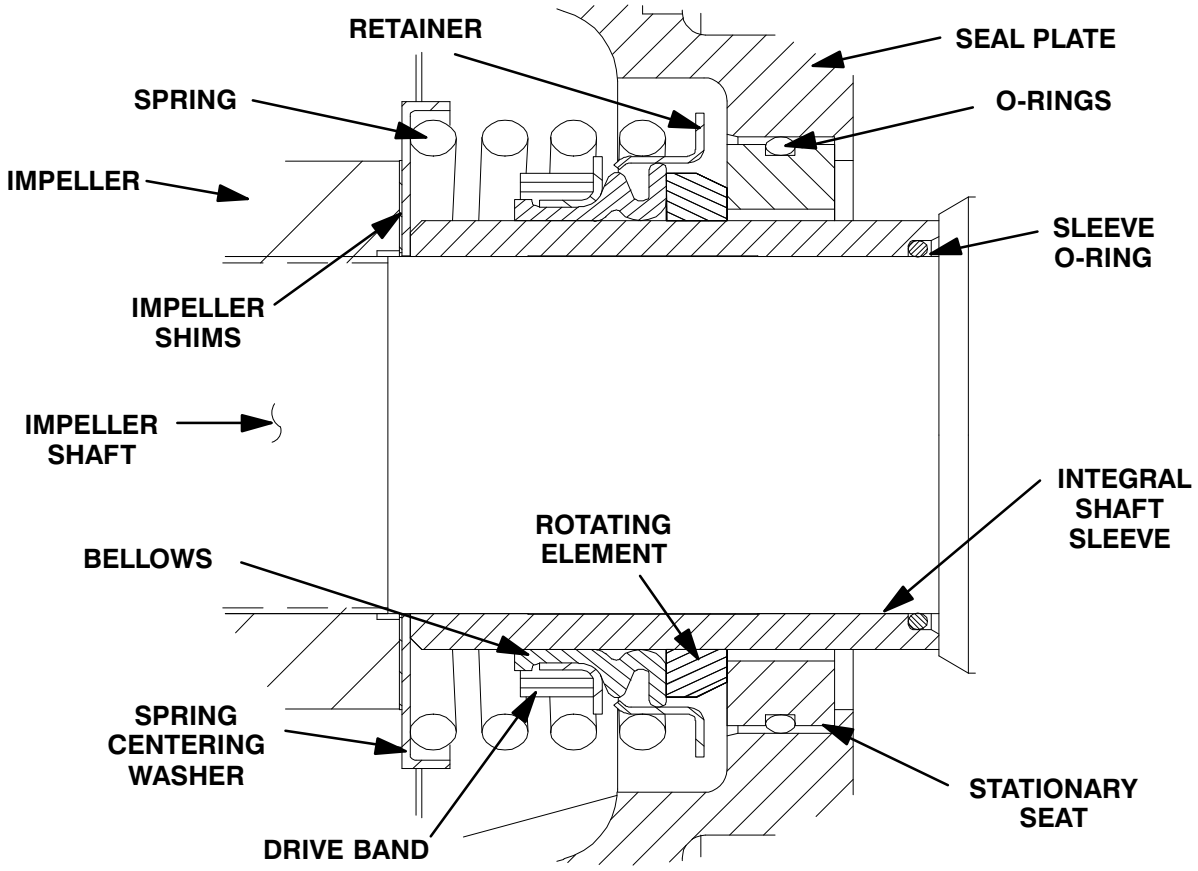

Figure 10. Seal Assembly

CAUTION

This seal is not designed for operation at temperatures above 160°F (71°C). Do not use at higher operating temperatures.

Lubricate the stationary seat O-ring with water or light oil. Press the stationary seat into the seal plate (3) until fully seated.

Position the seal plate over the shaft and secure it to the bearing housing (6) with the hardware (11 and 12). **Be careful** not to damage the stationary seat on the shaft threads.

Lubricate a new seal plate O-ring (29) with grease and install it in the groove in the seal plate.

To prevent damaging the shaft sleeve O-ring (28) on the shaft threads, stretch the O-ring over a piece of tubing 1-1/4 I.D. x 1-1/2 O.D. x 2-inches long (32 mm x 38 mm x 51 mm). Slide the tube over the shaft threads, then slide the O-ring off the tube and onto the shaft. Remove the tube, and continue to slide the O-ring down the shaft until it seats against the shaft shoulder.

Lubricate the shaft sleeve (23) with a **small** amount of light oil and slide the rotating subassembly (consisting of rotating element, bellows and retainer), onto the sleeve until the rotating element is **just flush** with the **undercut** end of the sleeve.

Slide the shaft sleeve and subassembled seal onto the shaft until the seal faces contact. Continue to push the sleeve through the seal until the undercut end seats over the O-ring and against the shaft shoulder.

Install the seal spring and spring centering washer. Lubricate the seal as indicated in **LUBRICATION** after the impeller is installed.

Impeller Installation And Adjustment

(Figure 5)

Inspect the impeller (1) and replace it if cracked or badly worn.

CAUTION

The shaft and impeller threads **must** be completely clean before reinstalling the impeller. Even the slightest amount of dirt on the threads can cause the impeller to seize to the shaft, making future removal difficult or impossible without damage to the impeller or shaft.

Install the same thickness of impeller adjusting shims (28) as previously removed and screw the impeller assembly onto the shaft until tight.

NOTE

*At the slightest sign of binding, **immediately** back the impeller off, and check the threads for dirt. **Do not** try to force the impeller onto the shaft.*

A clearance of .025 to .040 inch (0,64 to 1,02 mm) between the impeller and the seal plate is necessary for maximum pump efficiency. Measure this clearance, and add or remove impeller adjusting shims as required.

Secure the impeller to the shaft with the impeller washer and capscrew (25 and 26).

Pump Casing Installation

(Figure 4)

Lubricate the rotating assembly O-rings (15 and 27) with a light coating of grease. Use a suitable hoist and sling to slide the pump casing (1) over the rotating assembly.

Install two shims (31) at each mounting location and secure the casing to the rotating assembly (28) with the hardware (10 and 30).

Wear Plate And Back Cover Plate Installation And Adjustment

(Figures 4 and 11)

If the wear plate (5) was removed for replacement, carefully center it on the back cover plate (14) and secure it with the hardware (7 and 8).

Lubricate the O-rings (6 and 15) with light grease and install them in the grooves in the wear plate and back cover.

Clearance between the impeller and wear plate is adjusted using the four back cover nuts (13) and locking collars (9). There are 18 detents on the I.D. of each locking collar. Indexing the collars one detent on the adjusting screws represents approximately .005 inch (0,13 mm) of wear plate clearance. The recommended clearance between the wear plate and the impeller is .010 to .020 inch (0,25 to 0,50 mm).

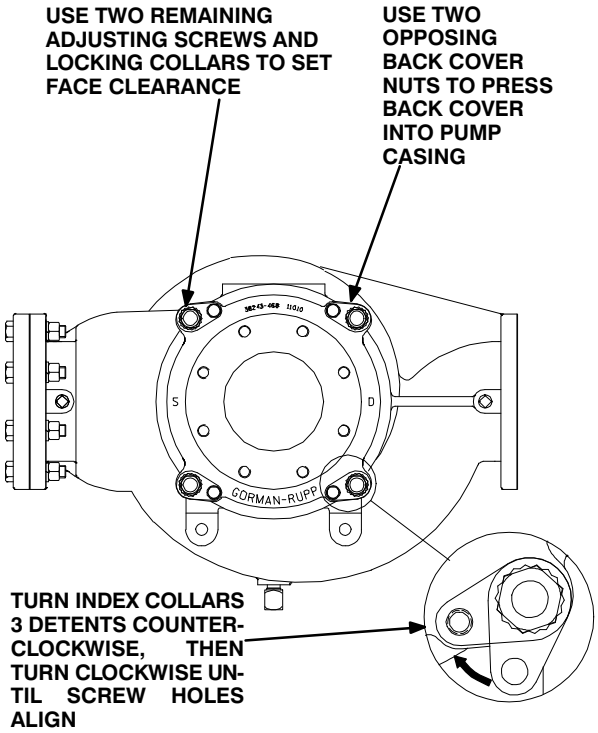

Figure 11. Installing and Adjusting Back Cover

Screw the four adjusting screws (12) into the tapped holes in the back cover plate until they are **just flush** with the machined surface on the back side of the cover plate.

Align the back cover plate over the studs (4) and slide it into the pump casing. Use two back cover nuts (13) on diagonally opposing studs to press the back cover into the pump casing until the wear plate **just touches** the impeller when the shaft is turned by hand. **Tighten the nuts evenly to avoid binding.**

With the wear plate just touching the impeller, turn the two free adjusting screws until they engage the pump casing. Position the locking collars over the

adjusting screws so the holes in the collars for the locking screws align approximately with the holes in the cover plate.

Loosen the back cover nuts used to press the back cover into the pump casing one full turn.

Pull the collars off the adjusting screws, index them three detents counterclockwise, and reinstall the collars on the adjusting screws. Use the collars to turn the adjusting screws clockwise until the holes in the locking collars realign with the tapped screw holes in the back cover plate. Secure the locking collars to the back cover plate with the hardware (10 and 11). Install the two remaining back cover nuts snugly against the adjusting screws.

Remove the first two back cover nuts from their studs. Turn the adjusting screws clockwise until they engage the pump casing. Install the locking collars (9) and hardware (10 and 11). Reinstall the back cover nuts.

Be sure the wear plate does not scrape against the impeller.

Over time it may be necessary to repeat the adjustment process to compensate for normal wear between the impeller and wear plate. When all of the adjustment has been used on the back cover side of the pump, an additional 0.120 inch (3 mm) of adjustment may be obtained by removing the rotating assembly adjusting shims (31).

Allow an installed pump to completely cool before draining liquid from the pump casing. Remove the back cover. Remove the rotating assembly adjusting shims, then reinstall the hardware securing the rotating assembly to the pump casing. Perform the back cover adjustment procedure described above to obtain the proper face clearance.

Discharge Check Valve Reassembly And Installation

(Figure 3)

The flapper and cover O-ring are the only serviceable parts of the check valve. If the flapper requires replacement, remove the hardware securing the cover and gasket. Separate the cover and replace the flapper.

Install the cover O-ring and secure the cover with the previously removed hardware.

Apply a small amount of light grease to the gasket to hold it in place and position it against the pump casing flange. Position the discharge check valve assembly and secure it with the previously removed hardware.

Priming Chamber Assembly And Installation

(Figure 7)

Clean and inspect the components of the priming valve (1). Inspect the linkage and ensure the orifice button (not shown) squarely engages the valve seat. Replace the orifice button if required (see **Priming Chamber Removal and Disassembly** for orifice button removal).

If the orifice button was removed, screw the new orifice button into the linkage bar until fully seated. Align the hole in the linkage bar with the holes in the bracket and reinstall the pivot pin. Secure the pivot pin with the previously removed “e-clip”.

Adjust the orifice button seating as necessary by screwing the orifice button into or out of the linkage bar. Proper adjustment is achieved when the orifice button fully seats against the orifice before the linkage bar on the float bottoms against the threads on the orifice button. When adjustment is complete, install and tighten the lock washer and hex nut securing the orifice button.

Install the strainer (6) and priming valve gasket (4).

Lower the float into the priming chamber (5) and secure the priming valve with the previously removed hardware (2 and 3).

(Figure 6)

Install the baffle (9) and gasket (8) and use a sling and suitable lifting device to position the priming chamber assembly on the hopper spool (not shown). Secure the priming chamber assembly with the hardware (6 and 7).

Reconnect the suction piping to the hopper spool and the air discharge tubing to the priming chamber assembly.

LUBRICATION

(Figure 4)

Seal Assembly

Fill the seal cavity through the hole for the vented plug (26) with SAE No. 30 non-detergent oil. Check the oil level regularly and refill as required. When lubricating a dry seal cavity, add approximately approximately 256 oz. or 8 U.S. quarts (7,6 liters) of oil to level indicated.

Bearings

(Figure 5)

The bearing housing was fully lubricated when shipped from the factory. Check the oil level regularly through the sight gauges (5) and maintain it at the midpoint of the gauge. When lubrication is required, remove the air vent and bushing (9 and 10) and add SAE No. 30 non-detergent oil through the opening. When lubricating a dry (overhauled) bearing housing, fill the bearing cavity with approximately 40 ounces (1,2 liters) of oil. Clean and reinstall the air vent. **Do not** over-lubricate. Over-lubrication can cause the bearings to over-heat, resulting in premature bearing failure.

NOTE

The white reflector in the sight gauge must be positioned horizontally to provide proper drainage.

Under normal conditions, drain the bearing housing once each year and refill with clean oil. Change the oil more frequently if the pump is operated continuously or installed in an environment with rapid temperature change.

CAUTION

Monitor the condition of the bearing lubricant regularly for evidence of rust or moisture condensation. This is especially important in areas where variable hot and cold temperatures are common.

For cold weather operation, consult the factory or a lubricant supplier for the recommended grade of oil.

Engine

Consult the literature supplied with the engine, or contact your local engine representative.

For Warranty Information, Please Visit
www.grpumps.com/warranty
or call:
U.S.: 419—755—1280
Canada: 519—631—2870
International: +1—419—755—1352

GORMAN-RUPP PUMPS