OM-06259-03
May 12, 2025

INSTALLATION, OPERATION, AND MAINTENANCE MANUAL

WITH PARTS LIST

GORMAN-RUPP PUMPS

SUBMERSIBLE PUMPS

MODELS

S8B1-E100 460/3

and

S8B1-E100 575/3

GORMAN-RUPP PUMPS

www.grpumps.com

©2025 Gorman-Rupp Pumps

Printed in U.S.A.

Register your new
Gorman-Rupp pump online at
www.grpumps.com

Valid serial number and e-mail address required.

RECORD YOUR PUMP MODEL AND SERIAL NUMBER

Please record your pump model and serial number in the spaces provided below. Your Gorman-Rupp distributor needs this information when you require parts or service.

Pump Model: _____

Serial Number: _____

TABLE OF CONTENTS

INTRODUCTION ..... PAGE I - 1

SAFETY - SECTION A ..... PAGE A - 1

INSTALLATION - SECTION B ..... PAGE B - 1

GENERAL INFORMATION ..... PAGE B – 1
PUMP SEAL ..... PAGE B – 1
LUBRICATION ..... PAGE B – 1
PUMP INSTALLATION ..... PAGE B – 1
Pump Motor Specifications ..... PAGE B – 2
Pump Dimensions ..... PAGE B – 2
Lifting ..... PAGE B – 2
Positioning the Pump ..... PAGE B – 3
Piping ..... PAGE B – 3
ELECTRICAL CONNECTIONS ..... PAGE B – 4
Field Wiring Connections (Incoming Power) ..... PAGE B – 4
Grounding Methods ..... PAGE B – 5
Pump Power Cable Connections ..... PAGE B – 6
Control Box Specifications ..... PAGE B – 7
Motor Cable Grounding Test ..... PAGE B – 7
Control Box Connections ..... PAGE B – 7
Liquid Level Devices ..... PAGE B – 7
WIRING DIAGRAMS ..... PAGE B – 8

OPERATION - SECTION C ..... PAGE C - 1

GENERAL INFORMATION ..... PAGE C – 1
Pump Performance ..... PAGE C – 1
Control Box ..... PAGE C – 1
PUMP OPERATION ..... PAGE C – 1
Liquid Temperature And Overheating ..... PAGE C – 1
Impeller Rotation ..... PAGE C – 2
STARTING, STOPPING AND OPERATIONAL CHECKS ..... PAGE C – 3
Starting ..... PAGE C – 3
Stopping ..... PAGE C – 3
Operational Checks ..... PAGE C – 3
COLD WEATHER PRESERVATION ..... PAGE C – 4
LUBRICATION ..... PAGE C – 4
Draining Oil ..... PAGE C – 5
Condition of Oil Oil ..... PAGE C – 5
Adding Oil ..... PAGE C – 5

TROUBLESHOOTING - SECTION D ..... PAGE D - 1

PREVENTIVE MAINTENANCE ..... PAGE D – 3

PUMP MAINTENANCE AND REPAIR - SECTION E ..... PAGE E - 1

STANDARD PERFORMANCE CURVE ..... PAGE E – 1

TABLE OF CONTENTS
(continued)

PARTS LISTS:
- Pump Assemblies ..... PAGE E – 3
- Terminal Housing and Cable Assemblies ..... PAGE E – 5

PUMP AND SEAL DISASSEMBLY AND REASSEMBLY ..... PAGE E – 6
PUMP END DISASSEMBLY ..... PAGE E – 7
- Strainer Removal ..... PAGE E – 7
- Draining Oil From Seal Cavity ..... PAGE E – 7
- Draining Oil From Motor Cavity ..... PAGE E – 7
- Positioning Pump For Disassembly ..... PAGE E – 7
- Strainer Plate and Suction Head Removal ..... PAGE E – 7
- Impeller Removal ..... PAGE E – 7
- Lower Seal Removal ..... PAGE E – 8
- Upper Seal Removal ..... PAGE E – 8

PUMP END REASSEMBLY ..... PAGE E – 8
- Cleaning and Inspection of Pump Parts ..... PAGE E – 8
- Upper Seal Installation ..... PAGE E – 9
- Lower Seal Installation ..... PAGE E – 10
- Impeller Installation ..... PAGE E – 11
- Suction Head and Strainer Plate Installation ..... PAGE E – 11
- Strainer Screen and Base Plate Installation ..... PAGE E – 12

MOTOR DISASSEMBLY ..... PAGE E – 12
- Terminal Housing and Power Cable Removal and Disassembly ..... PAGE E – 12
- Intermediate and Motor Housing Disassembly ..... PAGE E – 13
- Rotor and Bearing Removal ..... PAGE E – 13
- Stator Removal ..... PAGE E – 14
- Relief Valve ..... PAGE E – 14
- Hoisting Bail ..... PAGE E – 15

MOTOR REASSEMBLY ..... PAGE E – 15
- Stator Installation ..... PAGE E – 15
- Bearing Installation ..... PAGE E – 16
- Rotor and Intermediate Reassembly ..... PAGE E – 17
- Terminal Housing and Power Cable Reassembly and Installation ..... PAGE E – 17
- Sealing Terminal Housing Connections With Silicone Adhesive ..... PAGE E – 18
- Sealing Terminal Housing Connections With Potting Compound ..... PAGE E – 19
- Terminal Housing Installation ..... PAGE E – 20

FINAL ASSEMBLY ..... PAGE E – 20
VACUUM TESTING ..... PAGE E – 21
LUBRICATION ..... PAGE E – 22
- Seal Cavity ..... PAGE E – 22
- Motor Housing Cavity ..... PAGE E – 22

INTRODUCTION

Thank You for purchasing a Gorman-Rupp pump. **Read this manual** carefully to learn how to safely install and operate your pump. Failure to do so could result in personal injury or damage to the pump.

Because pump installations are seldom identical, this manual cannot possibly provide detailed instructions and precautions for every aspect of each specific application. Therefore, it is the responsibility of the owner/installer of the pump to ensure that applications not addressed in this manual are performed **only** after establishing that neither operator safety nor pump integrity are compromised by the installation. Pumps and related equipment **must** be installed and operated according to all national, local and industry standards.

If there are any questions regarding the pump or its application which are not covered in this manual or in other literature accompanying this unit, please contact your Gorman-Rupp distributor, or The Gorman-Rupp Company:

The Gorman-Rupp Company
P.O. Box 1217
Mansfield, Ohio 44901-1217
Phone: (419) 755-1011
or:
Gorman-Rupp of Canada Limited
70 Burwell Road
St. Thomas, Ontario N5P 3R7
Phone: (519) 631-2870

For information or technical assistance on the power source, contact the power source manufacturer's local dealer or representative.

HAZARD AND INSTRUCTION DEFINITIONS

The following are used to alert maintenance personnel to procedures which require special attention, to those which could damage equipment, and to those which could be dangerous to personnel:

DANGER!

Immediate hazards which WILL result in severe personal injury or death. These instructions describe the procedure required and the injury which will result from failure to follow the procedure.

WARNING!

Hazards or unsafe practices which COULD result in severe personal injury or death. These instructions describe the procedure required and the injury which could result from failure to follow the procedure.

CAUTION

Hazards or unsafe practices which COULD result in minor personal injury or product or property damage. These instructions describe the requirements and the possible damage which could result from failure to follow the procedure.

NOTE

Instructions to aid in installation, operation, and maintenance or which clarify a procedure.

SAFETY - SECTION A

This information applies to the S Series submersible motor driven pumps indicated on the front cover of this manual.

Because pump installations are seldom identical, this manual cannot possibly provide detailed instructions and precautions for each specific application. Therefore, it is the owner/installer's responsibility to ensure that applications not addressed in this manual are performed only after establishing that neither operator safety nor pump integrity are compromised by the installation.

WARNING!

Before attempting to open or service the pump:

1. **Familiarize yourself with this manual.**
2. **Lock out incoming power to the control box to ensure that the pump will remain inoperative.**
3. **Allow the pump to completely cool if overheated.**
4. **Close the discharge valve (if used).**

WARNING!

This pump is not designed to pump volatile, explosive, or flammable materials. Do not attempt to pump any liquids for which you pump is not approved, or which may damage the pump or endanger personnel as a result of pump failure. Consult the factory for specific application data.

WARNING!

Before connecting any cable to the control box, be sure to ground the control box. Refer to the Control Box Manual for the suggested grounding methods.

WARNING!

The pump motor is designed to be operated through the control box furnished with the pump. The control box provides overload protection and power control. Do not connect the pump motor directly to the incoming power lines.

WARNING!

The electrical power used to operate this pump is high enough to cause injury or death. Obtain the services of a qualified electrician to make all electrical connections. Make certain that the pump and enclosure are properly grounded; never use gas pipe as an electrical ground. Be sure that the incoming power matches the voltage and phase of the pump and control before connecting the power source. Do not run the pump if the voltage is not within the limits. If the overload unit is tripped during pump operation, correct the problem before restarting the pump.

WARNING!

The electrical power used to operate this pump is high enough to cause injury or death. Make certain that the control handle on the control box is in the OFF

position and locked out, or that the power supply to the control box has been otherwise cut off and locked out, before attempting to open or service the pump assembly. Tag electrical circuits to prevent accidental start-up.

WARNING!

Never attempt to alter the length or repair any power cable with a splice. The pump motor and cable must be completely waterproof. Injury or death may result from alterations.

WARNING!

All electrical connections must be in accordance with The National Electric Code and all local codes. If there is a conflict between the instructions provided and N.E.C. Specifications, N.E.C. Specifications shall take precedence. All electrical equipment supplied with this pump was in conformance with N.E.C. requirements in effect on the date of manufacture. Failure to follow applicable specifications, or substitution of electrical parts not supplied or approved by the manufacturer, can result in severe injury or death and void warranty.

WARNING!

After the pump has been installed, make certain that the pump and all piping or hose connections are secure before operation.

WARNING!

Obtain the services of a qualified electrician to troubleshoot, test and/or service the electrical components of this pump.

WARNING!

Approach the pump cautiously after it has been running. Although the motor is cooled by the liquid being pumped, normal operating temperatures can be high enough to cause burns. The temperature will be especially high if operated against a closed discharge valve. Never operate against a closed discharge valve for long periods of time.

WARNING!

Do not remove plates, covers, gauges, pipe plugs, or fittings from an overheated pump. Vapor pressure within the pump can cause parts being disengaged to be ejected with great force. Allow the pump to completely cool before servicing.

WARNING!

Do not attempt to lift the pump by the motor power cable or the piping. Attach proper lifting equipment to the lifting device fitted to the pump. If chains or cable are wrapped around the pump to lift it, make certain that they are positioned so as not to damage the pump, and so that the load will be balanced.

CAUTION

Pumps and related equipment must be installed and operated according to all national, local and industry standards.

INSTALLATION - SECTION B

GENERAL INFORMATION

Review all SAFETY information in Section A.

Since pump installations are seldom identical, this section is intended only to summarize general recommendations and practices required to inspect, position, and arrange the pump and piping. If there are any questions concerning your specific installation, contact your Gorman-Rupp distributor or the Gorman-Rupp Company.

Liquid level devices are available from Gorman-Rupp as optional equipment. For information on installing and operating these items, refer to the literature accompanying them.

Pump Model Designation

Following is a description of the model numbering system for S Series pumps. These submersible pumps are available in a range of sizes. Refer to the following chart to identify the size of your specific pump model.

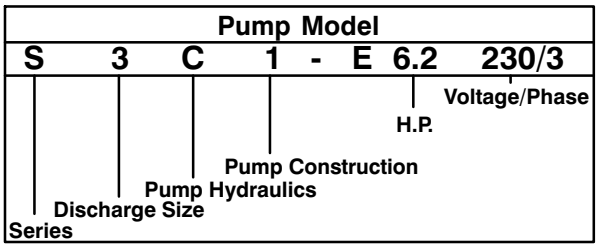

PREINSTALLATION INSPECTION

The pump assembly was inspected and tested before shipment from the factory. Before installation, check for damage which may have occurred during shipment. Check as follows:

a. Inspect the pump assembly for cracks, dents, damaged threads, and other obvious damage.

b. Check for loose attaching hardware. Since gaskets tend to shrink after drying, check for loose hardware at the mating surfaces.

c. Inspect the power cable for cuts or any other obvious damage.

d. Check that amperes, phase, voltage and hertz indicated on the name plate match the ratings on the control box and incoming power.

e. Carefully read all tags, decals, and markings on the pump, and perform all duties indicated.

f. Check for oil leaks. If there is any indication of an oil leak, see **LUBRICATION** at the end of this manual.

PUMP SEAL

There are two shaft seals in the pump. The lower seal prevents liquid from entering the intermediate cavity at the impeller end. The upper seal prevents oil leakage from the motor housing cavity and acts as back-up protection in the event of lower seal failure.

LUBRICATION

These pumps utilize two lubrication cavities. The motor housing cavity provides lubrication to the motor assembly and bearings, while the intermediate cavity provides lubrication to the pump seal.

The pumps are fully lubricated when shipped from the factory. However, lubrication levels **must be checked** before installing the pump (see **LUBRICATION** in **MAINTENANCE AND REPAIR - SECTION E**). An additional quart (0,9 liter) of oil is provided to “top off” the oil level in the pump motor cavity. If the oil level is abnormally low, determine the cause before putting the pump into service.

Due to differences in pump design, the quantity of oil and manner in which oil is to be added to the seal cavity varies between pump models. Refer to Table B-2 for oil capacities and positions for filling the seal cavity in each pump. Motor cavities requiring lubrication should always be positioned vertically for filling. Refer to **LUBRICATION**, Section C for lubrication specifications and intervals.

PUMP INSTALLATION

WARNING!

When installing or servicing the pump or controls, follow all requirements for the installation of wiring or electrical

equipment as outlined in the National Electric Code. Follow all safety requirements. Failure to observe these requirements could result in injury or death to personnel.

CAUTION

Do not allow the free end of the power cable to enter the liquid being pumped. The free end of the cable **must** be kept dry to prevent liquid from wicking through the cable and into the motor.

NOTE

*Refer to the performance curve in **Maintenance and Repair – Section E** when determining the most efficient piping installation. **The recommended maximum submergence depth is 65 feet.***

Pump Motor Specifications

See Table B-1 for pump specifications.

Table B-1. Pump Specifications

Model	Voltage/ Phase	Dual Voltage	Pump HP/ KW	Motor Speed (RPM)	Full Load Amperes	No Load Amperes	Locked Rotor Amperes	Discharge Size (NPT)
S8B	460/3	NO	100 HP	1750	145	59	715	8 INCH
	575/3				108	47	556	

Table B-2. Additional Specifications

Pump Model	Voltage/ Phase	Approximate Weight - Lbs. (kg)		Oil Capacity Ounces (Liters)		Seal Cavity Filling Position (H)orizontal (V)ertical
		Pump	50 Ft. Cable	Seal Cavity	Motor Cavity	
S8B	460/3	870 (395)	150 (68)	224 (6,6)	768 (22,7)	V
	575/3		105 (48)			

Pump Dimensions

For the approximate physical dimensions of your pump, refer to the pump specification data sheet or contact your Gorman-Rupp distributor or the Gorman-Rupp Company.

Lifting

Pump unit weights will vary depending on the mounting and drive provided. Check the shipping tag on the unit packaging for the actual weight, and use lifting equipment with appropriate capacity. Drain the pump and remove all customer-installed equipment such as suction and discharge hoses or piping before attempting to lift existing, installed units.

Refer to Table B–2 for the approximate maximum weight for your pump.

WARNING!

Do not attempt to lift the pump by the motor power cable or the piping. Attach proper lifting equipment to the lifting device fitted to the pump. If chains or cable are wrapped around the pump to lift it, make certain that they are positioned so as not to damage the pump, and so that the load will be balanced.

Positioning the Pump

NOTE

*Before installing and operating the pump, check the direction of impeller rotation to ensure that the pump is properly wired at the control box. See **IMPELLER ROTATION**, Section C.*

The pump is designed to operate fully or partially submerged. The rotating parts are oil lubricated, and the motor is cooled by a constant flow of liquid or air discharged through internal passages.

As a safeguard against rupture or explosion due to heat, models equipped with oil-lubricated motors are fitted with a pressure relief valve which will open if vapor pressure within the pump motor reaches a critical point.

The pump will operate if positioned on its side, but this is not recommended because the motor torque could cause the pump to roll during operation.

The pump should be independently secured and supported by the lifting device fitted on the pump. If the application involves a lot of debris, protect the pump from excessive wear and clogging by suspending it in a perforated barrel or culvert pipe. If the bottom is heavily sludge-covered, rest the pump on support blocks or suspend it from a raft or similar device near the surface of the liquid. See Figure B−1 for typical pump installations.

All liquid entering the pump must pass through a strainer screen. Any spherical solids which pass through the screen will pass through the pump.

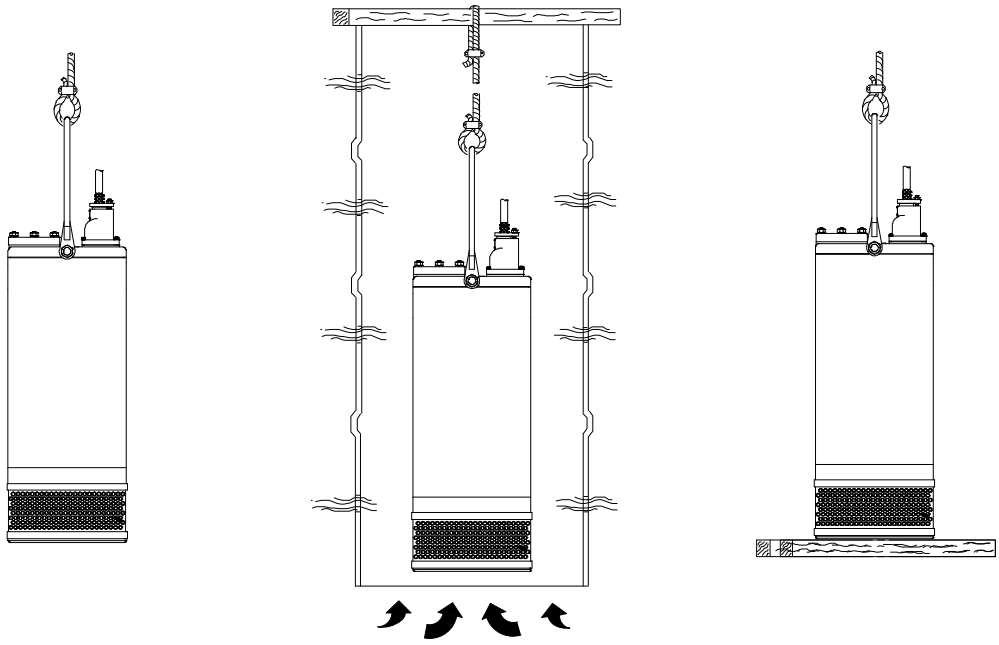

BY BAIL **IN PERFORATED CULVERT PIPE** **ON SUPPORTS**

Figure B-1 Typical Pump Installations

Piping

No suction piping is required in a standard installation.

These pumps are provided with a suction strainer to prevent large solids from clogging the impeller. If required, the strainer can be removed and the pump suction “staged” to the discharge of another pump, allowing one pump to feed the other on high discharge head applications.

To determine the size of the discharge connection, see **Table B-1, Pump Specifications**. Either hose or rigid pipe may be used. To facilitate mobility and maintenance, it is recommended that the discharge line be fitted with a quick disconnect fit-

ting near the pump. The discharge line must be independently supported to avoid strain and vibration on the pump.

Either hose or rigid pipe may be used to make discharge connections. For maximum pumping capacity, keep the line as short and straight as possible. Elbows and fittings used in discharge lines increase friction loss, minimize their use.

It is recommended that a check valve or throttling valve be installed in the discharge line to control siphoning or back flow when the pump is shut off.

ELECTRICAL CONNECTIONS

WARNING!

Install and operate this pump in accordance with the National Electrical Code and all local codes. Have a qualified electrician perform all checks and connections in this section.

Never attempt to alter the length of the pump motor cable or to repair it with a splice. The power cable and pump motor must be kept completely waterproof. Serious damage to the pump and injury or death to personnel can result from any alteration to the cable.

Control Box Installation

WARNING!

The pump is designed to be operated through the control box furnished with the pump. The control box provides overload protection and power control. Do not connect the pump motor directly to the incoming power lines.

The control box is a rainproof enclosure with a padlockable front cover. **The enclosure is not designed to be watertight, and should not be submerged.** Refer to the control box manual for enclosure dimensions and parts.

Secure the control vertically on a level surface, above flood level. The box should be easily accessible to the operator, and located close enough to the pump to avoid excessive voltage drop due to cable length (see **Pump Power Cable Connection**). After the box is installed, make certain the front cover latches properly.

CAUTION

Failure to mount the control box vertically on a level surface may affect operation of the pump controls.

Field Wiring Connections (Incoming Power)

WARNING!

The electrical power used to operate this pump is high enough to cause injury or death. Obtain the services of a qualified electrician to make all electrical connections. Make certain that the pump and enclosure are properly grounded; never use gas pipe as an electrical ground. Be sure that the incoming power matches the voltage and phase of the pump and control before connecting the power source. Do not run the pump if the voltage is not within the limits.

WARNING!

Do not connect the pump motor directly to the incoming power lines. The pump motor is designed to operate through a Gorman-Rupp approved control box which provides overload protection and power control; otherwise, the pump warranty will be voided. Make certain that the pump and control box are properly grounded. Install and operate the control box in accordance with the National Electric Code and all local codes. Failure to follow these could result in injury or death to personnel.

Field wiring is **not** provided with the pump, and must be supplied by the user. The field wiring must

be of the proper size and type to ensure an adequate voltage supply to the pump. Voltage available **at the motor** must be within the range indicated in Table B-3.

To calculate the voltage available at the motor, proceed as follows:

a. Measure the voltage across the incoming lines (1 & 2 for single phase, 1 & 2, 2 & 3, and 1 & 3 for three phase) **while the pump is operating at full capacity**. Refer to the literature supplied with the control box for power supply connections.

b. Next, subtract the motor cable voltage drop (see Table 4, **Pump Power Cable Specifications**).

c. Do not continue to operate the pump if this voltage is not within the recommended limits. Obtain the services of a qualified electrician to determine the correct field wiring size and other details to ensure an adequate voltage supply to the pump.

Table B-3. Pump Voltage Requirements

NOMINAL VOLTAGE	PHASE	MINIMUM VOLTAGE	MAXIMUM VOLTAGE
460	3	420	500
575	3	520	630

Make certain all connections are tight and that cable entry points are rainproof. Support the cable weight, if required, to prevent excessive strain on cable clamps and cable.

Grounding Methods

Electrically ground the installation before connecting the field wiring to the control box. Install a grounding terminal to the enclosure and connect it to a properly embedded electrode.

The material used for the electrode **must** be an excellent conductor of electricity, such as copper. If iron or steel is used, it must be galvanized or otherwise metal plated to resist corrosion. **Do not** coat the electrode with any material of poor conductivity, such as paint or plastic.

The electrode must conform to the recommendations of N.E.C. ARTICLE 250. Follow all installation requirements of the N.E.C., and all applicable codes. See Figure B—3 for some suggested grounding methods.

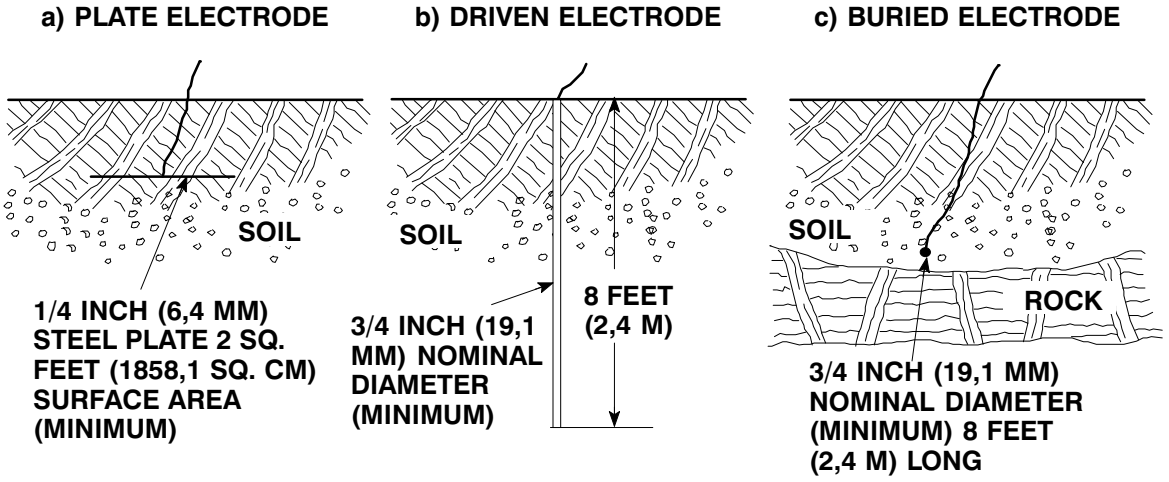

Figure B-3. Suggested Grounding Methods

a. **Plate Electrode:** An iron or steel plate, 1/4 inch (6,4 mm) thick, completely impeded in the ground. The plate must present a surface area of at least 2 square feet (1858,1 sq. cm.).

b. **Driven Electrode:** A rod or pipe, 3/4 inch (19,1 mm) in diameter minimum, 8 feet (2,4 m) long, completely driven into the ground.

c. **Buried electrode:** If rock or stone prevents embedding the full 8 foot (2,4 m) length of the ground rod, bury it horizontally in a trench.

Space the ground rod or plates at least 6 feet (1,8) from any other electrode or ground rod, such as those used for signal circuits, radio grounds, lightning rods, etc.

The earth surrounding the ground rod or plate **must** contain enough moisture to make a good electrical connection. In dry or sandy areas, pour water around the rod, or consult qualified personnel to devise a method of improving the connections.

WARNING!

The electrical power used to operate this pump is high enough to cause injury or death. Make certain that the control box is properly grounded after installation.

Refer to the literature accompanying the control box for field wiring connections.

Pump Power Cable Connections

WARNING!

The electrical power used to operate this pump is high enough to cause injury or death. Obtain the services of a qualified electrician to make all electrical connections. Make certain that incoming power to the control box is in the OFF position and locked out, or that the power supply to the control box has been otherwise cut off and locked out, before connecting power or accessory cables.

The pump is provided with a 50 ft. (15,2 m) power cable (see Table B—4 for standard power cable specifications). If a longer cable is required, an optional cable assembly **must** be ordered from the factory. Splicing of the power cable is **not** recommended by the Gorman-Rupp Company due to safety and warranty considerations.

WARNING!

Never attempt to alter the length or repair any power cable with a splice. The pump motor and cable must be completely waterproof. Injury or death may result from alternations.

Table B-4. Pump Power Cable Specifications

Pump Model	Voltage/ Phase	A.W.G Cable Size	Cable O.D. Inches (mm)	Conductor Dia. Inches (mm)	Amp Rating (See Note Below)	Cable Type ◗	DC Resistance (ohms) at 25°C (77°F) per 1000 ft. (305 m)	Voltage Drop per 100 ft. (30,5m) at Max. Load
S8B	460/3	2/0	1.75 (44)	0.48 (12,2)	189**	GGC	0.09	3.04
	575/3	1	1.51 (38)	0.38 (9,6)	142**		0.13	3.07

NOTE: * Amp Rating at 30°C (86°F)
**** Amp Rating at 40°C (104°F)**
◗ Canada Use Type SOW Cable

When necessary to change or connect the pump power cable to the control box, make certain the incoming power is **OFF** and **LOCKED OUT**, Make certain the control box is **PROPERLY GROUNDED** and that the electrical data on the control matches the motor name plate data.

Connect the pump power cable to the control box as shown in the wiring diagrams in the control box manual. Use conduit or cable clamps to secure the power cable to the control box. Make certain that all connections are tight and that cable entry points are rainproof.

NOTE

The power cable furnished with the pump includes three electrical conductors (white, red, and black), two grounding conductors (green) and one ground check conductor (yellow). The yellow ground check lead is used in conjunction with customer-supplied ground monitoring equipment. If this equipment is not used, the yellow lead should be used as a ground conductor.

Control Box Specifications

WARNING!

Any control box used to operate the pump must be approved by the Gorman-Rupp Company for the application.

Motor Cable Grounding Test

WARNING!

Do not connect the pump control cable to the control box or incoming voltage before verifying the pump ground; otherwise, personnel will be exposed to serious injury or death.

Using a volt-ohm meter, connect one lead to the motor cable green/yellow ground lead. Connect the other lead to an **uninsulated** point on the pump body. The test circuit should close.

If the test circuit does not close, there is a defect in the cable or motor which must be corrected.

Control Box Connections

This pump is shipped completely wired for the voltage shown on the name plate, and is ready for operation through an approved control box.

Ground and wire the control box in accordance with the instructions accompanying it.

NOTE

*For reference, internal motor wiring connections are shown in **Maintenance and Repair – Section E**.*

Liquid Level Devices

The standard pump is **not** furnished with a means to automatically regulate liquid level. However, the pump may be controlled to perform filling or dewatering functions by using the following optional sensing device (see Figure B–4):

- **Bulb (Float) Type:** a bulb raises or lowers (floats) with the liquid level, thus activating an enclosed miniature switch.

The liquid level circuitry may be prewired as a factory option, or easily added to the standard control box in the field by qualified personnel. The unit is complete except for the remote float switches. For installation and operation, see the detailed instructions included with the optional package.

CAUTION

Liquid level devices **must** be positioned far enough apart to allow 10 minutes between starts. If the pump motor cycles more than 6 starts per hour, it will over-heat, resulting in damage to the motor windings or control box components.

Other types of liquid level devices may also be used. Consult the factory for the liquid level device best suited for your application.

CAUTION

If the pump requires liquid level devices, install the liquid level devices and connect them to the control box in accordance with the instructions accompanying the devices.

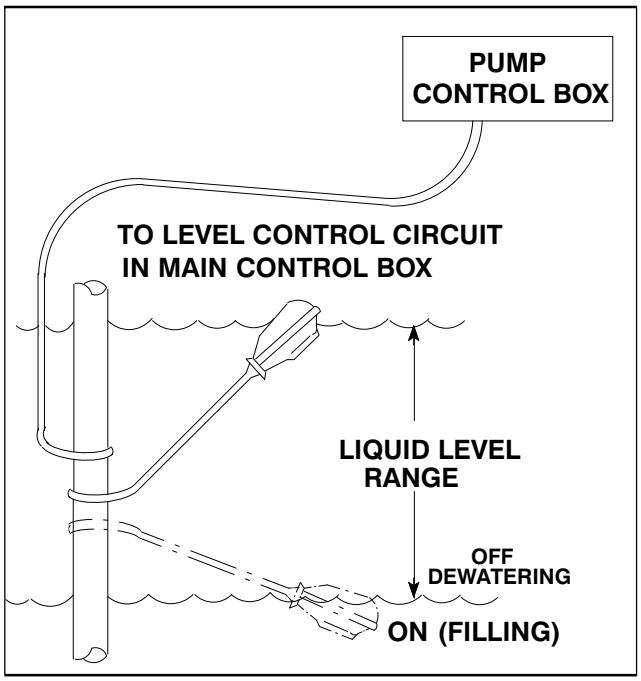

Figure B-4. Liquid Level Device

CAUTION

The internal wiring of the sensing devices are different for filling and dewatering functions. Be sure to follow the instructions included with the option before making wiring connections.

WIRING DIAGRAMS

Refer to the appropriate wiring diagram in the literature accompanying the control box when making electrical connections.

OPERATION - SECTION C

GENERAL INFORMATION

Review all SAFETY information in Section A.

WARNING!

This pump is designed to handle most non-volatile, non-flammable liquids. Do not attempt to pump any liquids for which your pump is not approved, or which may damage the pump or endanger personnel as a result of pump failure. Consult the factory for specific application data.

Follow the instructions on all tags, labels and decals attached to the pump.

Pump Performance

CAUTION

Since operation of the pump motor is dependent upon the quality and performance of the electrical controls, the pump warranty is valid only when controls have been specified or provided by The Gorman-Rupp Company.

Refer to the performance curve in **Maintenance and Repair - Section E** for the specific performance for your pump.

Control Box

A control box is provided to facilitate operation of the pump. It contains controls for starting and stopping the pump, and provides overload protection for the pump motor. The pump control may be equipped with an optional automatic liquid level sensing device, in which case those circuits are also contained within the control box.

WARNING!

The pump motor and control box are not designed to be explosion-proof. Do not operate in an explosive atmosphere. Any control box used to operate the pump must be approved by the Gorman-Rupp Company for the application. Improper location of a non-explosion proof control box could result in destruction of equipment, injury or death to personnel.

See the operating instructions furnished with the control box, and with other optional accessories and controls, before attempting to start the pump.

PUMP OPERATION

Liquid Temperature and Overheating.

WARNING!

Overheated pumps can cause severe burns and injury. If the pump becomes overheated:

1. **Stop the pump immediately.**
2. **Lock out the power to the control panel to ensure that the pump will remain inoperative.**
3. **Allow the pump to completely cool if overheated.**
4. **Close the discharge valve (if used).**
5. **Refer to instructions in this manual before restarting the pump.**

Overheating can occur if the pump is misapplied; if it is started more than 6 times within one hour; if the temperature of the liquid being pumped exceeds the temperature for which the pump was designed, if the control box fails to provide overload

or thermal protection, or if the pump is operated against a closed discharge valve for an extended period of time.

CAUTION

Do not start the pump more than 6 times per hour. If the motor does not cool between starts it will overheat, resulting in damage to the motor windings.

As a safeguard against rupture or explosion due to heat, models equipped with oil-lubricated motors are fitted with a pressure relief valve which will open if vapor pressure within the pump motor reaches a critical point. Always terminate power to the pump and control before investigating pump or control box problems.

WARNING!

Approach the pump cautiously after it has been running. Although the motor is cooled by the liquid being pumped, normal operating temperatures can be high enough to cause burns. The temperature will be especially high if operated against a closed discharge valve. Never operate against a closed discharge valve for long periods of time.

If overheating does occur, stop the pump immediately and allow it to cool before servicing it. **Approach any overheated pump cautiously.**

WARNING!

Overheated pumps can cause severe burns and injuries. If overheating of the pump occurs:

1. **Stop the pump immediately.**
2. **Ventilate the area.**
3. **Allow the pump to completely cool.**
4. **Check the temperature before servicing.**
5. **Vent the pump slowly and cautiously**
6. **Refer to instructions in this manual before restarting the pump.**

It is recommended that the pressure relief valve assembly be replaced at each overhaul, or any time the pump motor overheats and activates the valve. **Never** replace this valve with a substitute which has not been specified or provided by the Gorman-Rupp Company.

Impeller Rotation

Check impeller rotation as follows before operation to ensure that the impeller is rotating in the correct direction.

CAUTION

While checking impeller rotation, secure the pump to prevent the power cable from coiling.

Suspend the pump from the lifting device fitted on the pump. Apply power briefly and note the direction of pump kickback. As viewed from the top, the pump should kick in a **counterclockwise** direction; this will indicate that impeller rotation is correct.

If the pump kicks in a **clockwise** direction, impeller rotation is incorrect. If the pump is powered by a three-phase motor, have a qualified electrician interchange the control box connections of any two pump motor power leads. Re-check pump kickback; it should now be in a counterclockwise direction.

If rotation is incorrect on a single-phase motor, contact the factory before installing the pump.

WARNING!

The electrical power used to operate

this pump is high enough to cause injury or death. Make certain that incoming power is off and locked out before interchanging motor leads.

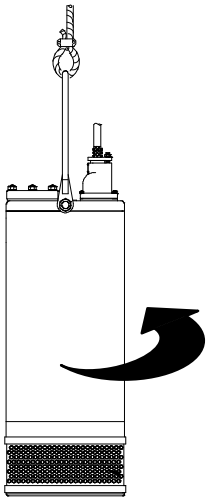

Figure C-1. Checking Pump Rotation

STARTING, STOPPING, AND OPERATIONAL CHECKS

Starting

CAUTION

Do not attempt to operate the pump until impeller rotation has been checked; improper rotation will affect pump performance and may damage the pump.

Follow the instructions accompanying the control box, start the pump, and run any recommended checks.

CAUTION

Never start the pump more than 6 times per hour. If the pump motor does not cool between starts, it will over-heat, resulting in damage to the motor windings.

Stopping

Follow the instructions accompanying the control box for stopping the pump.

WARNING!

On pumps equipped with a motor thermal protector, the integral thermal overload device will shut off the motor if the temperature rises above design limits. When the pump cools and the temperature falls below these limits, the motor will restart automatically. To avoid the hazards of an unexpected motor startup, do not attempt to handle or service the pump unless all power to the motor has been shut off and locked out at the control box; otherwise, serious personal injury could result.

During motor shutoff by the thermal overload device, control box circuits remain live. Do not attempt to service any control box components unless incoming power has been shut off.

To stop the pump, turn the control handle OFF, thereby opening the circuit breakers. This **does not** terminate incoming power through the field wiring connected to the control box.

After stopping the pump, be sure to perform all required maintenance and preservation procedures.

Operational Checks

To detect minor problems, check the pump for proper operation when it is first started, and at periodic intervals during operation.

CAUTION

To avoid serious damage to the pump, check for unusual noises or excessive vibration while the pump is running. If noise or vibration is excessive, stop operation and refer to the troubleshooting chart in the maintenance and repair manual.

The suction inlet or impeller may become clogged with debris. In some cases, stopping the pump momentarily may backflush this blockage. If backflushing does not clear the debris, remove the pump from the sump or wet well and clear manually.

WARNING!

Never introduce air or steam pressure into the pump casing to remove a blockage. This could result in personal injury or damage to the equipment. If backflushing is absolutely necessary, limit liquid pressure input to 50% of the maximum permissible operating pressure shown in the pump performance curve (refer to the accompanying Parts List Manual).

Check the pump for overheating. Overheating can occur if the pump is misapplied, required to start repeatedly, if the control box fails to provide overload or thermal protection, or if the pump is operated against a closed discharge valve for an extended period of time.

CAUTION

Do not start the pump more than 6 times per hour. If the motor does not cool between starts it will overheat, resulting in damage to the motor windings.

Check the oil level(s) as indicated in the following **LUBRICATION** section.

COLD WEATHER PRESERVATION

WARNING!

Do not attempt to thaw the pump by using a torch or other source of flame. This could damage gaskets, O-rings or heat the oil in the seal housing above critical temperatures, causing the pump to rupture or explode.

The pump will not freeze as long as the casing is submerged in liquid. If the casing is not submerged, or if the liquid begins to freeze, remove the pump from the sump or wet well and dry it thoroughly. Run the pump for two or three minutes to dry the inner walls.

If the pump does freeze while it is out of the liquid, submerge it until thawed; if the liquid is near freezing, the pump must be submerged for an extended period of time. Check thawing by starting the pump and checking that the shaft rotates freely. If the pump remains frozen, allow additional thawing time before attempting to restart.

If submerging does not thaw the pump, move it into a warm area until completely thawed.

LUBRICATION

WARNING!

Do not remove plates, covers, gauges, pipe plugs or fittings from an overheated pump. Vapor pressure within the pump can cause parts being disengaged to be ejected with great force. Allow the pump to completely cool before servicing.

On a new pump, check the oil level in both seal and motor cavities before initial startup, and drain and replace the oil after the first 200 hours of operation. Following this, check the oil level in the seal cavity after the first two weeks of operation, and every

month thereafter. Check the motor lubrication level any time the pressure relief valve is activated, and replace the oil annually.

Before installing or removing the lubrication plug(s), always clean the area around the plug(s) to prevent contamination.

Draining Oil

Refer to the Parts List in **Maintenance and Repair - Section E** for drain plug location.

Remove the drain plug slowly to release any pressure. Install a short pipe nipple in the hole. Place a clean container under the plug and, using a hoist, tilt the pump at an angle of approximately 60°.

Repeat the procedure for the motor housing oil.

Condition Of Oil

Check the condition of the oil drained from the pump. Clear oil indicates that the pump seal(s) are functioning properly. If the oil is milky or contains a small amount of water, it must be changed.

If the oil contains a large amount of water, it must be changed, and the seal(s) must be checked before the pump is put back in operation (refer to **Maintenance and Repair**, Section E).

Adding Oil

Refer to Table B—2 in **INSTALLATION** for oil capacities and positions for filling the seal cavity in your pump. Motor cavities requiring lubrication should always be positioned vertically for filling.

The grade of lubricant used is critical to the operation of this pump. Use premium quality submersible pump oil as specified in the following table. Oil must be stored in a clean, tightly closed container in a reasonably dry environment.

When lubricating the seal cavity, remove the lubrication plug as indicated in **Draining Oil**, and position the pump as indicated in Table B—2. Add premium quality submersible pump oil through this plug hole. If the pump is to be positioned vertically or at an angle, fill the cavity to the bottom of the plug hole. If the pump is to be positioned horizontally, completely fill the cavity.

Install and tighten the lubrication plug.

When lubricating the motor cavity, add oil through the hole for the pressure relief valve. If the pump is equipped with a motor lubricant level plug, remove this plug and fill the cavity until oil escapes through the hole. If the pump is not equipped with a motor lubricant level plug, fill the cavity to the top of the hole.

Reinstall the pressure relief valve.

Table C-1. Pump Oil Specifications

Specifications:	
Type	Premium high viscosity index, anti-wear hydraulic oil
Viscosity @ 100°F (38°C)	110 to 155
Viscosity @ 210°F (99°C)	40 to 50
Dielectric	26,000 (volts-min)
Recommended supplier:	
Gulf Oil Company	Gulf Harmony HVI AW 26
Acceptable alternate suppliers:	
Gulf Oil Company	Gulf Harmony 32 AW
Texas Oil Company	Rando HD 32 or HD AZ 32
Sun Oil Company	Sunvis 816 or 916
BP (Also Boron)	Energol-HLP 32
Shell Oil Company	Tellus 32, Tellus T-23 or T32
ARCO	Duro 32
Exxon (Also Esso)	Nuto H 32
Petro-Canada	Harmony HVI 22

TROUBLESHOOTING - SECTION D

Review all SAFETY information in Section A.

NOTE

*Many of the probable remedies listed in the **TROUBLESHOOTING CHART** require use of electrical test instruments; for specific procedures, see **ELECTRICAL TESTING** at the end of the chart.*

TROUBLESHOOTING CHART

TROUBLE	POSSIBLE CAUSE	PROBABLE REMEDY
PUMP FAILS TO START, OVERLOAD UNIT NOT TRIPPED (MANUAL MODE).	Power source incompatible with control box.	Correct power source.
	No voltage at line side of circuit breaker.	Check power source for blown fuse, open circuit breaker, broken lead or loose connections.
	Open circuit in motor windings or power cable.	Check continuity.
	Defective motor power cable.	Replace cable.
	Defective motor.	Check for and replace defective motor components.
PUMP FAILS TO START, OVERLOAD UNIT NOT TRIPPED (AUTOMATIC MODE).	Liquid level device or control circuits improperly connected to main control box.	Check wiring diagrams: correct or tighten connections.
	Level sensing device(s) improperly positioned.	Position device(s) at proper level.
	Level sensing device(s) fouled with mud or foreign material.	Clean sensing device(s).
	Float type sensing device(s) tangled or obstructed.	Check installation for free movement of float.
	Defective liquid level sensing device(s) or control panel.	Repair or replace defective unit(s).
OVERLOAD UNIT TRIPS	Low or high voltage, or excessive voltage drop between pump and control box.	Measure voltage at control box. Check that wiring is correct type, size, and length (see **Field Wiring Connection, Section B**).
	Defective insulation in motor windings or power cable; defective windings.	Check insulation resistance; check continuity.
	Impeller jammed due to debris or insufficient clearance.	Disassemble pump and check impeller.
	Bearing(s) frozen.	Disassemble pump and check bearing(s).

TROUBLESHOOTING CHART (cont'd)

TROUBLE	POSSIBLE CAUSE	PROBABLE REMEDY
MOTOR RUNS, BUT PUMP FAILS TO DELIVER RATED DISCHARGE.	Discharge head too high.	Reduce discharge head or install staging adaptor and additional pump.
	Low or incorrect voltage.	Measure control box voltage, both when pump is running and when shut off.
	Discharge throttling valve partially closed; check valve installed improperly.	Open discharge valve fully; check piping installation.
	Discharge line clogged or restricted; hose kinked.	Check discharge lines; straighten hose.
	Liquid being pumped too thick.	Dilute liquid if possible.
	Strainer screen or impeller clogged.	Clear clog(s). Stop pump; back flow may flush away debris.
	Insufficient liquid in sump or tank.	Stop pump until liquid level rises.
	Worn impeller vanes; excessive impeller clearance.	Check impeller and clearance (see **PUMP END REASSEMBLY** in **Maintenance and Repair, Section E**).
	Pump running backwards.	Check direction of rotation. If incorrect, interchange any two motor leads at the control box (see **Pump Rotation, Section C**).
PUMP RUNS WITH EXCESSIVE NOISE OR VIBRATION	Pumping entrained air.	Check liquid level in sump; check position of pump and liquid level sensing device(s).
	Damaged or unbalanced impeller.	Replace impeller.
	Discharge piping not properly supported.	Check piping installation.
	Impeller jammed or loose.	Check impeller.
	Motor shaft or bearings defective.	Disassemble pump and check motor and bearings.
	Pump is cavitating.	Reduce discharge head or restrict flow on low head applications.

ELECTRICAL TESTING

Make the electrical checks which follow to determine if pump malfunctions are being caused by problems in the motor or in the motor cable.

Test Equipment

A volt/amp/ohmmeter and megohmmeter of adequate range and quality are required to conduct the electrical tests which follow.

Equipment	Use
Ammeter	To check AC Voltage and current (amperage)
Ohmeter	To measure resistance (ohms) to ground

CAUTION

Refer to the wiring diagram(s) accompanying the motor and control box before reconnecting any electrical leads which have been disconnected. Connections to the wrong terminals may damage the motor and/or control devices.

Voltage Imbalance

Use a voltmeter to read each phase of the incoming 3 phase power. Each phase must balance with the other two as closely as can be measured with a commercial instrument. If the phases are out of balance, contact your power company. If the phases are balanced, check out the motor as described in the following steps:

a. Use a voltmeter, Amprobe, or equivalent instrument to read the voltage of incoming power lines 1 and 2, 2 and 3, and 1 and 3 at the control box. Voltage must match as closely as can be measured. If possible, measure the voltage at the control box with:

   1. The pump shut off.
   2. The pump running in air.
   3. The pump submerged and running under full load.

   The voltage measured under each condition must be the same.

b. If voltage is balanced when the pump is off but is imbalanced when the pump is running, thoroughly check the power source, all interconnecting cables, and the pump motor to isolate the defect.

c. Use an Amprobe or equivalent instrument to measure the current draw (amperage) of each phase while the pump is running under full load, and with no load. In each condition, the amperage readings for all three phases must match as closely as can be measured. Normal amperage values are listed in Table 1, Section B; these values apply only when the voltage at the site is the normal voltage listed.

Motor and Power Cable Continuity

Set the megohmmeter at R x 1 scale and zero-balance it. Test as follows:

a. Shut off incoming power to the control box, and disconnect the motor power cable leads. Connect the megohmmeter test leads to any two power cable leads, and note the megohmmeter reading. A high resistance reading indicates an open or broken circuit in the power cable or motor windings, or a bad connection between the motor and cable.

b. Repeat Step a. with each set of leads. The three readings shall be as close as can be measured.

c. If readings indicate that continuity problems exist in the motor or motor cable, the motor must be returned to the factory or to a U/L-approved facility.

Insulation Resistance

Set the megohmmeter at R x 100, and zero-balance it. Test as follows:

a. Shut off incoming power to the control box, and disconnect the motor power cable leads. Connect one megohmmeter test lead to the motor cable green/yellow ground lead. Touch

the other test lead to each of the motor cable leads in turn. Note the readings.

b. Readings will indicate resistance values in both the power cable and motor windings.If resistance reads infinity (∞), insulation is good. If resistance reads between infinity (∞), and 1 megohm, insulation is acceptable but should be rechecked regularly. If resistance reads less than 1 megohm, insulation should be checked more closely and frequently.

c. If readings indicate that a ground exists, test the stator and motor power cable separately. Replace as required.

PUMP MAINTENANCE AND REPAIR - SECTION E

MAINTENANCE AND REPAIR OF THE WEARING PARTS OF THE PUMP WILL MAINTAIN PEAK OPERATING PERFORMANCE.

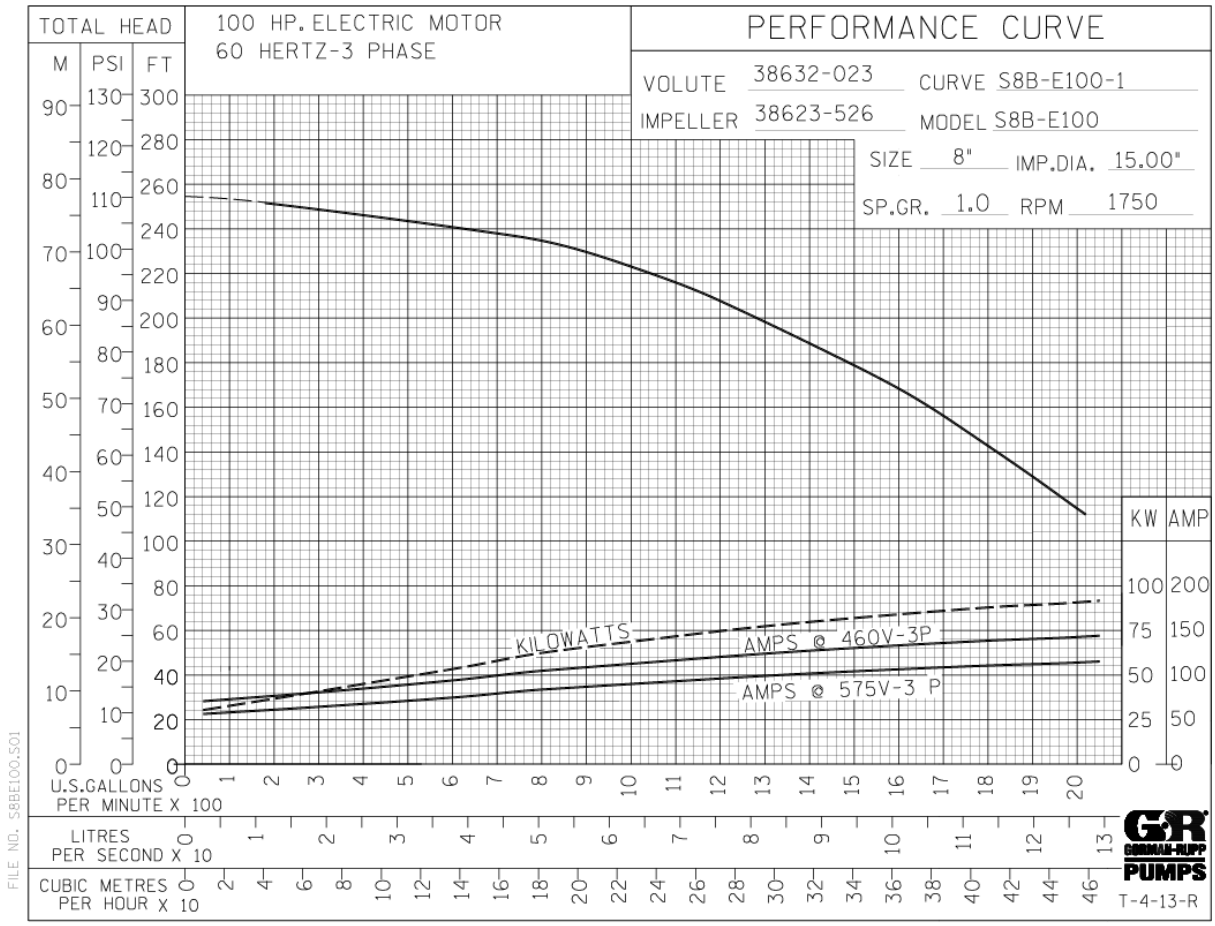

✳ **STANDARD PERFORMANCE FOR PUMP MODELS S8B1-E100 460/3 AND S8B1-E100 575/3**

✳ Based on 70°F (21°C) clear water at sea level with minimum suction lift. Since pump installations are seldom identical, your performance may be different due to such factors as viscosity, specific gravity, elevation, temperature, and impeller trim.

If your pump serial number is followed by an “N”, your pump is **NOT** a standard production model. Contact the Gorman-Rupp Company to verify performance or part numbers.

CAUTION

Pump speed and operating condition points must be within the continuous performance range shown on the curve.

SECTION DRAWING

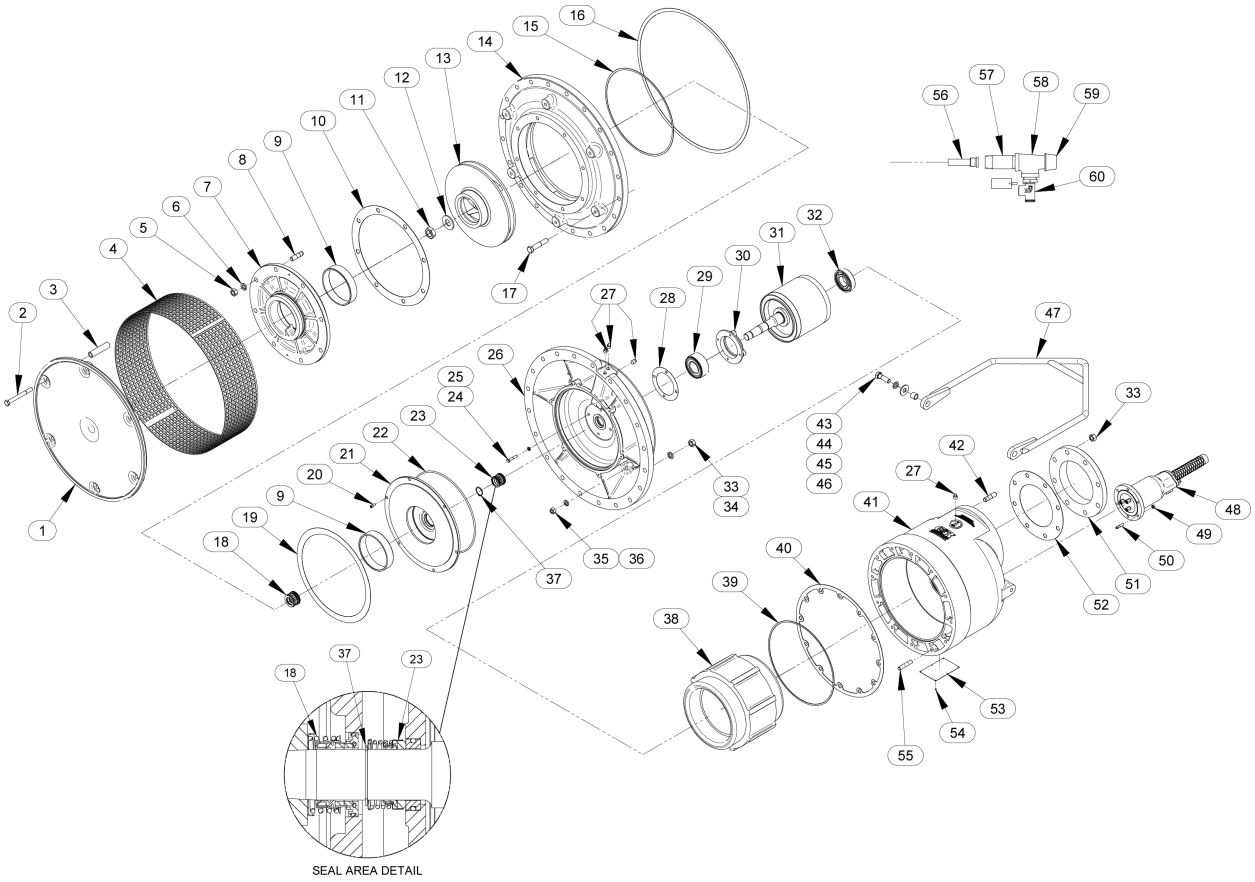

Figure E-1. S8B1-E100 460/3 And S8B1-E100 575/3 Pump Assemblies

S8B1-E100 460/3 And S8B1-E100 575/3 Pump Assemblies
Parts List
(From S/N 1907426 Up)

If your pump serial number is followed by an “N”, your pump is **NOT** a standard production model. Contact the Gorman-Rupp Company to verify part numbers.

ITEM NO.	PART NAME	PART NUMBER	QTY
1	BASE PLATE	10036 13080	1
2	HEX HD CAPSCREW	B1024 15991	6
3	3/4" PIPE	31413-026 15079	6
4 *	STRAINER SCREEN	10090 1599V	1
5	HEX NUT	D12 17000	8
6	LOCK WASHER	J12 17000	8
7	SUCTION HEAD	38246-033 11010	1
8	STUD	C1211 1706G	8
9 *	WEAR RING	38691-309 14000	2
10 *	GASKET	38683-817 20000	1
11	JAM NUT	AT20S 17000	1
12	IMPELLER WASHER	11199 17000	1
13 *	IMPELLER	38623-526 11030	1
14	DIFFUSER	38632-023 11030	1
15 *	GASKET	10062G 20000	1
16 *	GASKET	38682-813 20000	1
17	HEX HD CAPSCREW	B1216 15991	20
18 *	SEAL ASSY	46512-305	1
19 *	GASKET	38682-812 20000	1
20	SOC HD CAPSCREW	BD0503 17000	6
21	SEAL PLATE	38272-708 10010	1
22 *	O-RING	S2207	1
23 *	MECH SEAL	S1934	1
24	HEX HD CAPSCREW	B0608 15991	4
25	LOCK WASHER	J06 15991	4
26	INTERMEDIATE	38261-020 13040	1
27	PIPE PLUG	P06 17000	4
28 *	GASKET	10085G 20000	1
29 *	BALL BEARING DBL-ROW	23431-461	1
30	BEARING CAP	10085 10010	1
31 *	ROTOR & SHAFT ASSY	47112-083	1
32 *	BALL BEARING	S1077	1
33	HEX NUT	D12 15991	28
34	LOCK WASHER	J12 15991	20
35	HEX NUT	D10 17000	12
36	LOCK WASHER	J10 17000	12
37	RETAINING RING	S245	1
38 *	STATOR ASSY		
	-460V/3	47113-087	1
	-575V/3	47113-088	1
39 *	GASKET	10038G 20000	1
40 *	GASKET	38684-703 20000	1
41	MOTOR HSG ASSY	42822-014 2413	
42	STUD	C1211 15991	8
43	HEX HD CAPSCREW	B1210 15991	2
44	LOCK WASHER	J12 15991	2
45	FLAT WASHER	K12 15991	2
46	BUSHING-HOISTING BAIL	10045 17000	2
47	HOISTING BAIL ASSY	10039 2400V	1
48	TERM HSG & CABLE ASSY		
	-460V/3	47367-061	1
	-575V/3	47367-028	1
49	DEFORM LOCK NUT	DD06 15991	6
50	STUD	C0607 15991	6
51	8" NPT FLANGE	1759 11000	1
52 *	GASKET	1759G 18000	1
53	NAMEPLATE	2613CY 17020	1
54	DRIVE SCREW	BM#04-03 17000	6
55	STUD	10443 1706G	12
56	FILL TUBE ASSY	10040 24040	1
57	HVY PIPE NIPPLE	THA1614 15079	1
58	STREET TEE ASSY	14138	1
59	PIPE CAP	V16 11999	1
60	PRESS RELIEF VLV ASSY	14139	1
NOT SHOWN:			
	IMPELLER KNOCKER	2177C 14070	1
	MOTOR VOLTAGE TAG		
	-460V/3	6588BL	1
	-575V/3	6588BM	1
	SUB PUMP OIL	9568	1
	INSTRUCTION TAG	6588AC	1
	G-R DECAL	GR-03	1
	CONTROL PANEL		
	-460V/3	48319-537	1
	-575V/3	48319-536	1
OPTIONAL:			
	REPAIR GASKET SET	11000V	1
	HEAT-SHRINK TUBE & ADHESIVE KIT:	48315—004	1
	TERM POTTING KIT	12442A	1
	ANODE PLATE ASSY	42116—002	1
LIQUID LEVEL DEVICES:			
	FLOAT TYPE	27471—155	1
	LIQ LEV CONTRL RELAY	27521—321	1

✳ INDICATES PARTS RECOMMENDED FOR STOCK

SECTION DRAWING

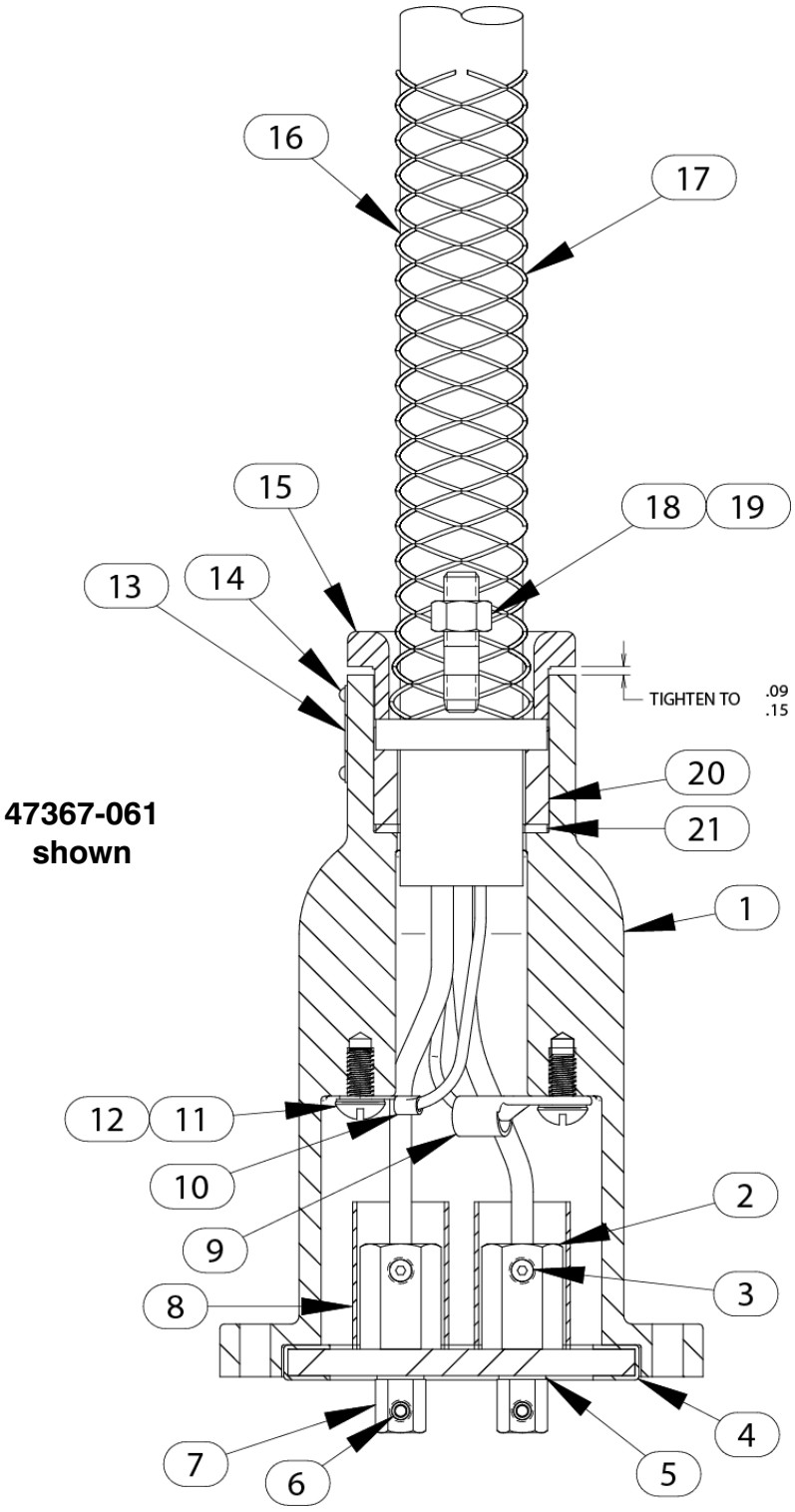

Figure E-2. Terminal Housing And Cable Assembly

Terminal Housing And Cable Assembly
Parts List

ITEM NO.		PART NAME	PART NUMBER	QTY
1		TERMINAL HOUSING	10088B 13040	1
2		TERMINAL COLLAR	10052A 14100	3
3		ALLEN HEAD SETSCREW	GA0602 14990	3
4	*	TERMINAL PLATE ASSY	11163 24101	1
5	*	SEALING WASHER	S1586	3
6		ALLEN HEAD SETSCREW	GA0501-1/2 14990	3
7		TERMINAL POST	38724-009 14100	3
8	*	HEAT-SHRINK TUBE	31417-030 19530	3
9		TERMINAL		
		-460V	27214-065	1
		-575V	27214-062	1
10		TERMINAL		
		-460V	27214-035	1
		-575V	S1550	1
11		RD HD MACHINE SCREW	X0603 14990	2
12		T TYPE LK WASHER	AK06 15991	2
13		INFORMATION PLATE	38816-047 17990	1
14		DRIVE SCREW	BM#04-03 17000	4
15		TERMINAL GLAND	10658 13040	1
16	*	CABLE		
		-460V	10325A	1
		-575V	10325L	1
17	*	CABLE GRIP		
		-460V	11227F	1
		-575V	11227H	1
18		HEX NUT	D08 15991	2
19		STUD	C0808 15991	2
20	*	GLAND BUSHING		
		-460V	10758E 19100	1
		-575V	31144-001 19100	1
21		WASHER		
		-460V	10659B 17000	1
		-575V	31133-110 15991	1
NOT SHOWN:				
		RTV SEALANT - 2 OZ.	18771-106	1

✳ INDICATES PARTS RECOMMENDED FOR STOCK

PUMP AND SEAL DISASSEMBLY AND REASSEMBLY

Review all SAFETY information in Section A.

WARNING!

Do not attempt to service the pump assembly unless all power to the motor has been shut off at the control box; otherwise, injury or death could result.

Use a lifting device with sufficient capacity. If slings or chains are used to move the pump or components, make sure that the load is balanced; otherwise serious personal injury or death could result.

The maintenance and repair instructions in this manual are keyed to the sectional views, Figures E−1 and E−2, and the corresponding parts lists.

Select a suitable location, preferably indoors, to perform required maintenance. All work must be performed by qualified personnel.

CAUTION

All repairs to the pump motor must be performed by a Gorman-Rupp authorized Submersible repair facility or the factory. Any repairs to the motor assembly performed by the customer or an unauthorized repair facility negates the warranty.

This section provides maintenance instructions required to properly service the pump components. Pump motor maintenance may be performed **only** by a Gorman-Rupp authorized Submersible repair facility, or the factory. Otherwise, the pump warranty will be negated, and damage to the pump, and injury or death to personnel can result. Contact the factory for the authorized repair facility closest to you.

Use the hoisting bail to remove the pump from the wet well or sump, and move it to a location where the discharge line can be removed. It is not necessary to disconnect a flexible discharge hose before removing the pump. If rigid discharge piping is used, disconnect the piping before attempting to move the pump.

WARNING!

Do not attempt to lift the pump by the motor power cable or the piping. Attach proper lifting equipment to the lifting device fitted to the pump. If chains or cable are wrapped around the pump to lift it, make certain that they are positioned so as not to damage the pump, and so that the load will be balanced.

Check the chart in **TROUBLESHOOTING**, Section D of this manual, to determine the nature of the pump problem. If the problem is mechanical in nature, such as worn pump parts, seal replacement, lubrication, etc., refer to **PUMP END DISASSEMBLY** for instructions.

If the problem is electrical, complete disassembly may not be required. Refer to **Electrical Testing** in **TROUBLESHOOTING**, Section D, and have a qualified electrician check the control box, cable and terminal housing. If the problem is determined to be in the motor, proceed with **PUMP END DISASSEMBLY,** followed by **MOTOR DISASSEMBLY**. Otherwise, see **Terminal Housing And Power Cable Disassembly**.

WARNING!

The electrical power used to operate this pump is high enough to cause injury or death. Make certain that the control handle on the control box is in the <u>off</u> position and locked out, or that the power supply to the control box has been otherwise cut off and locked out, before attempting to open or service the pump assembly. Tag electrical circuits to prevent accidental start-up.

Carefully inspect any O-rings or gaskets before removal and cleaning to determine if a proper seal and compression existed prior to disassembly. If sealing was faulty or questionable, the cause must be determined and corrected before reassembly. All gaskets and most O-rings **must** be replaced if

disturbed. Repair gaskets and O-rings are listed in the Parts List.

PUMP END DISASSEMBLY

Strainer Removal

(Figure E-1)

To remove the strainer assembly (4), raise the pump slightly, or lay it on its side and disengage the hardware (2, 35 and 36) securing the strainer and base plate (1) to the diffuser (14). If the impeller (2) is clogged, the debris can usually be removed without further disassembly.

Draining Oil From Seal Cavity

(**Figure E-1)**

If any further disassembly is to be performed on the pump, the seal oil cavity must be drained.

CAUTION

Let the pump cool before removing the seal cavity drain plug. Pressure built up within a hot pump could cause the oil to spray out when the plug is removed. Remove the plug slowly and permit pressure to vent to atmosphere.

Lay the pump on its side with the pipe plugs (27) facing up. Clean any dirt from around the plugs. Remove the seal cavity drain plug (27), and install a short 3/8-inch NPT nipple in the hole. Tip the pump and drain the seal oil into a **clean** container. Inspect the oil for water, dirt, or cloudy condition which could indicate lower seal failure or poor gasket seal.

Draining Oil From Motor Cavity

(**Figure E-1)**

If motor problems are suspected, remove the motor cavity drain plug (27), and install a short nipple in the hole. Tip the pump and drain the motor oil into a **clean** container. Inspect the oil for dark color which could indicate motor overheating, water or dirt contamination. The presence of dirt or water could indicate a breakdown in the waterproof integrity of the motor cavity, probably due to poor gaskets or seals.

Positioning Pump For Disassembly

(Figure E-1)

It is recommended that the pump be positioned upside-down during disassembly. To hold the pump in the inverted position, rest the pump securely on blocks. Be careful not to damage the terminal housing and cable assembly (48) while in this position. Use adequate equipment and personnel to safely handle the pump until it is secured. If inverting the pump is not practical, lay the pump on its side and secure it to prevent rolling.

Suction Head And Diffuser Removal

(Figure E-1)

Remove the hardware (5 and 6) securing the suction head (7) to the diffuser (14). Pull the suction head from the diffuser and remove the suction head gasket (10). Remove the hardware (17, 33 and 34) securing the diffuser (14) to the intermediate (26). Tap around the parting surfaces with a soft-faced mallet and separate the assemblies. Remove and discard the diffuser gaskets (15 and 16).

Inspect the wear ring (9) for excessive wear or scoring and replace as required. The wear ring is a press fit into the suction head. To remove the wear ring, drill two small holes horizontally through the ring 180° apart. Use a small chisel or mechanical cutting device to complete the cuts through the wear ring.

CAUTION

Use caution not to damage the suction head when removing the wear ring.

Impeller Removal

(Figure E-1)

NOTE

The impeller hub is drilled and tapped with two 3/8 — 16 UNC screw holes for use with an impeller puller (not furnished) if desired.

Insert a 3/4 inch square X 36 inch long (19,1 mm square X 914,4 mm long) rod between the vanes of the impeller (13) to prevent impeller rotation. Remove the impeller nut (11) and washer (12). Screw the impeller knocker (not shown, supplied with pump) onto the rotor shaft.

NOTE

The rotor shaft is tapered and forms a friction fit with the impeller. Screw the impeller knocker onto the shaft until it bottoms out.

Use two pry bars to exert pressure on the back of the impeller and strike the knocker sharply until the impeller breaks loose.

CAUTION

Do not use excessive force when striking the knocker. It is possible to drive the rotor and lower ball bearing (29) out of position during impeller removal. If this occurs, the motor must be disassembled and the lower bearing must be pressed back into place to achieve proper impeller clearances (see **Motor Disassembly** and **Motor Reassembly**).

After the impeller is free; remove the impeller knocker and slide the impeller off the shaft. Use caution when removing the impeller; tension on the seal spring will be released. Inspect the impeller for excessive wear or damage and replace as required.

If no further disassembly is required, proceed to the appropriate areas in **PUMP END REASSEMBLY**.

Lower Seal Removal

(Figures E-1 and E-3)

Carefully remove the spring retainer and seal spring. Lubricate the rotor shaft (31) and work oil under the bellows assembly. Slide the rotating portion of the seal assembly (consisting of the bellows, retainer and rotating element) off the shaft.

To remove the stationary portion of the seal, remove the socket head capscrews (20) and separate the seal plate (21) from the intermediate (26). Remove and discard the seal plate O-ring (8). Place a **clean** cloth on a flat surface and place the seal plate on the cloth with the impeller side down. Use a drift pin or screwdriver to press on alternate sides of the stationary seat until the stationary seat and O-rings are removed.

Inspect the wear ring (9) for excessive wear or scoring and replace as required. The wear ring is a press fit into the seal plate. To remove the wear ring, drill two small holes horizontally through the ring 180° apart. Use a small chisel or mechanical cutting device to complete the cuts through the wear ring.

CAUTION

Use caution not to damage the seal plate when removing the wear ring.

If no further disassembly is required, proceed to the appropriate areas in **PUMP END REASSEMBLY**.

Upper Seal Removal

(Figures E-1 and E-3)

Unless cracked or otherwise worn, it is not necessary to remove the intermediate for access to the upper seal assembly (4).

NOTE

Do not *attempt to loosen the hardware (23, 24, 33 and 34) securing the bearing cap (30) and the intermediate at this time. The rotor shaft and bearings could be damaged*

Remove the seal retaining ring (37) using snap ring pliers. Use caution when removing the retaining ring; tension on the seal spring will be released. Remove the spring retainer and seal spring.

Lubricate the rotor shaft and work oil under the bellows. Slide the rotating portion of the seal assembly (consisting of the bellows, retainer and rotating element) off the shaft.

To remove the stationary portion of the seal, slide the hooked ends of two wires along the shaft and under the stationary seal seat. Hook the back side of the seat and pull it from the intermediate bore.

If no further disassembly is required, proceed to the appropriate areas in **PUMP END REASSEMBLY**.

NOTE

Do not disassemble the motor unless it is necessary and a clean, well-equipped shop is available. If the motor housing components are to be serviced, see ***MOTOR DISASSEMBLY*** *in this section. Do not reassemble the pump end components at this time.*

PUMP END REASSEMBLY

NOTE

Reuse of old O-rings, gaskets, or shaft seal parts will result in premature leakage or reduced pump performance. It is strongly recommended that new gaskets and shaft seal assemblies be used during reassembly (see the parts lists for numbers).

Cleaning And Inspection Of Pump Parts

(Figure E-1)

With the pump inverted, stuff a clean tissue into the stationary seal seat bore of the intermediate (26) or wrap a small rag around the shaft to prevent foreign material from entering the motor cavity.

Carefully inspect any O-rings or gaskets before removal and cleaning to determine if a proper seal and compression existed prior to disassembly. If sealing was faulty or questionable, the cause must be determined and corrected before reassembly. Replace any parts as required.

Thoroughly clean all reuseable parts with a soft cloth soaked in cleaning solvent. Remove all O-rings and gaskets, and clean the sealing surfaces of dirt or gasket material. Be careful not to scratch gasket surfaces.

WARNING!

Most cleaning solvents are toxic and flammable. Use them only in a well ventilated area free from excessive heat, sparks, and flame. Read and follow all precautions printed on solvent containers.

Inspect the rotor shaft (31) for damaged threads, scoring, or nicks. Remove nicks and burrs with a fine file or emery cloth to restore original contours. If the shaft is bent or severely damaged, the rotor and shaft must be replaced as an assembly (see **MOTOR DISASSEMBLY**).

Neither of the shaft seal assemblies (18 or 23) should be reused because wear patterns on the finished faces cannot be realigned during reassembly. This could result in premature failure. If necessary to re-use an old seal in an **emergency**, **carefully** wash all metallic parts in fresh cleaning solvent and allow to dry thoroughly.

Handle the seal parts with extreme care to prevent damage. Be careful not to contaminate the precision finished faces; even fingerprints on the faces can shorten seal life. If necessary, clean the faces with a non-oil based solvent and a clean, lint-free tissue. Wipe **lightly** in a circular pattern to avoid scratching the faces.

Inspect the seal components for wear, scoring, grooves, and other damage that might cause leakage. If any components are worn, replace the complete seal; **never mix old and new seal parts.**

Install the shaft seals as illustrated in Figure E—3.

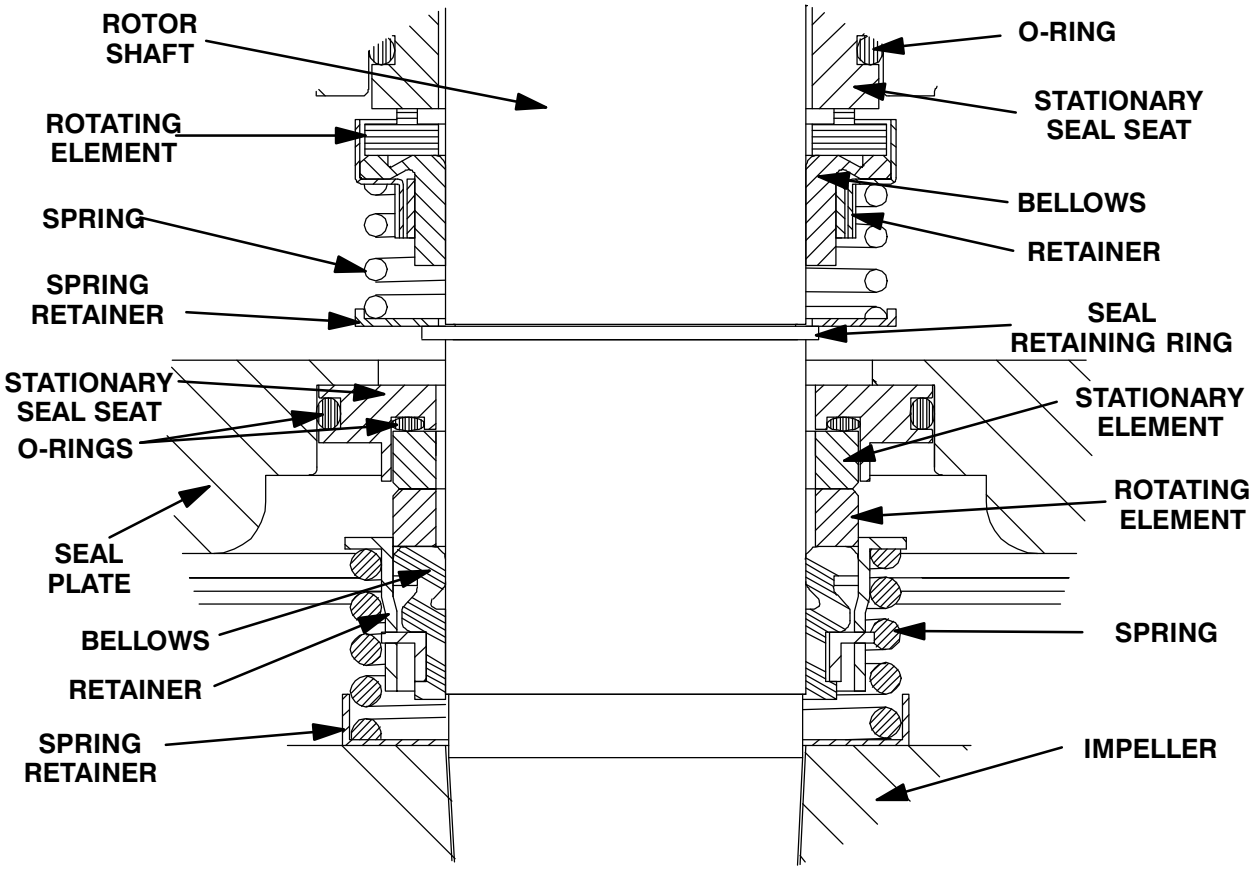

Figure E-3. Upper And Lower Seal Assemblies

CAUTION

This seal is not designed for operation at temperatures above 122° F (50° C). Do not use at higher operating temperatures.

Upper Seal Installation

(Figures E-1 and E-3)

Do not unwrap a new seal assembly until time of installation. Cleanliness of seal components is critical, especially the seal faces.

Clean the rotor shaft (31) and seal cavity area of the intermediate (26). Be sure the area is dry and free of lint and dirt. Check the seal bore for burrs or nicks that might prevent a good seal. Remove them with a fine file or emery cloth to restore original contours. If the shaft is bent or damaged, the complete rotor and shaft must be replaced as an assembly. Apply a **light** coating of oil to the bore of the intermediate.

Carefully remove the material stuffed into the seat bore (or unwrap the shaft). **Be sure** no debris stopped by the material falls into the motor cavity.

NOTE

When pressing seal components onto the shaft, use hand pressure only. A push tube cut from a length of plastic pipe will aid in installing seal components. The I.D. of the push tube should be approximately the same as the I.D. of the seal spring.

Lubricate the stationary seat O-ring and position the stationary seat in the intermediate bore with the sealing face up. Cover the seal face with a clean tissue and use your thumbs to press the stationary seat into the bore. Apply equal pressure on opposite sides until the seat contacts the bore shoulder. Remove the tissue and inspect the seal face to ensure that it is clean and dry. If cleaning is necessary, use clean tissue to wipe **lightly** in a circular pattern.

Unpack the rotating portion of the seal. Be certain the seal face of the rotating element is free of grit or surface damage. If the rotating element does not want to stay in the bellows retainer when turned

upside down, place a **small** amount of grease at equal spaces on the back of the element and position it in the bellows retainer. The grease should hold the element in position until the seal is installed. Assemble the drive grooves of the rotating element into the drive lugs of the bellows retainer.

Apply a **light** coating of oil to the seal seating surface on the shaft, the groove for the retaining ring (37), and I.D. of the bellows. Inspect the seal face to ensure that it is clean and dry. If cleaning is necessary, use a clean tissue to wipe in a circular pattern.

Positions the seal rotating portion on the lubricated shaft as shown in Figure E—3. Apply firm, steady pressure on the seal retainer and slide it down the shaft in one smooth motion until the seal faces contact. **Use caution** not to roll or cut the bellows on the groove for the retaining ring.

Slide the seal spring over the shaft and bellows retainer, and install the spring retainer. Install the seal retaining ring (37). See Figure E—3 for the proper order of seal assembly.

Lower Seal Installation

(Figures E-1 and E-3)

Thoroughly clean the gasket surfaces and seal bore of the seal plate (21). The seal bore must be free of burrs and nicks which could damage the seal. Inspect the seal plate for cracks, distortion, or erosion and replace it if defective.

If removed, press a replacement wear ring (9) into the seal plate bore with the chamfered end **toward the inside** of the seal plate. Be sure the ring seats squarely against the bore shoulder.



The wear ring **must** seat squarely in the seal plate bore or binding and/or excessive wear will result.

Coat the seal plate O-ring (22) with light oil and in-stall it on the seal plate. Position the seal plate on a clean flat surface with the impeller side up.

Unpack the stationary seat and element. Subassemble the stationary element in the stationary seat. Apply a **light** coating of oil to the seal plate bore and the O.D. of the of the seal seat. Keep the sealing face dry.

Position this subassembly in the seal plate bore with the sealing face up, and cover it with a clean tissue. Use your thumbs to press the seat into the bore. Apply equal pressure on opposite sides of the seat until it is fully seated in the bore. Remove the tissue and inspect the seal face to ensure that it is clean and dry. If cleaning is necessary, use clean tissue to wipe **lightly** in a circular pattern.

NOTE

When pressing seal components onto the rotor shaft, use hand pressure only. A push tube cut from a length of plastic pipe will aid in installing seal components. The I.D. of the push tube should be approximately the same as the I.D. of the seal spring.

Carefully position the seal plate and stationary seal components over the rotor shaft and against the intermediate. **Be careful** not to damage the stationary element already installed. Secure the seal plate to the intermediate using the socket head capscrews (20).

Unpack the rotating portion of the seal. Be certain the seal face of the rotating element is free of grit or surface damage. If the rotating element does not want to stay in the bellows retainer when turned upside down, place a **small** amount of grease at equal spaces on the back of the element and position it in the bellows retainer. The grease should hold the element in position until the seal is installed. Assemble the drive grooves of the rotating element into the drive lugs of the bellows retainer. Apply a **light** coating of oil on the shaft and the I.D. of the bellows.

Positions the seal rotating portion on the lubricated shaft as shown in Figure E—3. Apply firm, steady pressure on the seal retainer and slide it down the shaft until the seal faces contact.

Slide the seal spring over the shaft and bellows retainer and install the spring retainer. See Figure E—3 for proper order of seal assembly.

Impeller Installation

(Figure E-1)

Inspect the impeller (13) for cracks, broken vanes, or wear from erosion, and replace it if damaged. Clean the threads on the rotor shaft to remove any old thread locking material.

Be sure the impeller bore and the shaft are free of oily film and completely dry. **Do not** apply lubri-

cants of any kind to the impeller bore or the tapered section of the shaft. Install the impeller (13) and impeller washer (12) on the rotor shaft (31).

After the impeller is installed, coat the threads of the rotor shaft with 'Loctite Threadlocker No. 242' or equivalent compound. Install the impeller nut (11). Insert a rod between the vanes of the impeller to prevent shaft rotation, and torque the impeller nut to 300 ft. lbs. (3600 in. lbs. or 42 m. kg.).

Remove the rod and turn the impeller to check for free rotation.

NOTE

*If the impeller (13) is not fully seated and binds against the diffuser, the shaft and lower bearing have been driven out of position during impeller removal. If this occurs, the lower bearing must be pressed back into place (see **Motor Disassembly** and **Motor Reassembly**).*

Diffuser And Suction Head Installation

(Figure E-1)

Inspect and thoroughly clean the diffuser (14) and its gasket surfaces. Cement the diffuser gaskets (15 and 60) in place using '3M Gasket Adhesive No. 847' or equivalent compound.

Carefully position the diffuser on the intermediate (26). Install the hardware (17, 33 and 34). Coat the threads of the capscrews (17) with 'Never-Seez' and torque the nuts (33) to 120 ft. lbs. (1440 in. lbs. or 16,6 m. kg.).

Inspect and thoroughly clean the suction head (7) and its gasket surface. If removed, press a replacement wear ring (9) into the suction head bore with the chamfered end **toward the inside** of the suction head. Be sure the ring seats squarely against the bore shoulder.

CAUTION

The wear ring **must** seat squarely in the suction head bore or binding and/or excessive wear will result.

Install the suction head gasket (10) over the studs (8) and carefully position the suction head over the studs. Coat the studs with 'Never-Seez' or equivalent compound. Install the lockwashers (6) and nuts (5); torque the nuts to 120 ft. lbs. (1440 in. lbs. or 16,6 m. kg.).

Turn the impeller and check for free rotation. If the impeller scrapes, disassemble the suction head and check the wear ring (9) for proper installation.

Strainer Installation

(Figure E-1)

Inspect the strainer assembly (4) for cracks, distortion or erosion and replace it if defective.

Carefully position the strainer on the diffuser (14). Pack the spacers (3) with heavy grease and assemble the spacers to the base plate (1) using the capscrews (2). (The grease will help to prevent the spacers from sliding off the capscrews.)

Remove any grease from the ends of the capscrews and apply 'Loctite Threadlocker No. 242' or equivalent compound to the threads of the capscrews. Secure the complete strainer assembly using the capscrews (2). Make certain that the strainer seats properly against the shoulder of the diffuser.

See **LUBRICATION** and **FINAL ASSEMBLY** before putting the pump back into service.

MOTOR DISASSEMBLY

Disassembly of the motor is rarely required except to replace the motor rotor, stator or bearings. Do not disassemble the motor unless it is necessary and a clean, well-equipped shop is available.

NOTE

It is recommended that a pump with a defective motor be returned to Gorman-Rupp, or to one of the Gorman-Rupp authorized Submersible Repair Centers.

WARNING!

The electrical power used to operate this pump is high enough to cause injury or death. Make certain that the control handle on the control box is in the off position and locked out, or that the power supply to the control box has been otherwise cut off and locked out, before

attempting to open or service the pump assembly. Tag electrical circuits to prevent accidental start-up.

Carefully inspect any O-rings or gaskets before removal and cleaning to determine if a proper seal and compression existed prior to disassembly. If sealing was faulty or questionable, the cause must be determined and corrected before reassembly. Replace any parts as required.

Terminal Housing And Power Cable Removal And Disassembly

(Figure E-1)

Total disassembly of the terminal housing and power cable (48) is not always required. Disassemble and replace **only** the parts proven defective by inspection or testing. See **Electrical Testing** in **TROUBLESHOOTING**.

The terminal housing and power cable assembly (48) may be serviced without disassembling the motor housing or pump end or without draining the oil from the motor cavity. However, the oil **must** be drained before attempting to disassemble the motor housing and components.

Secure the pump in an upright position. Remove the deformed locknuts (49) securing the terminal housing assembly to the motor housing assembly (41).

(Figure E-2)

Carefully raise the terminal housing (1) from the motor housing until the terminals (7) are accessible. Loosen the allen head setscrews (6), and disconnect the motor leads from the terminal posts. Separate the terminal housing and power cable assembly (16) from the motor housing.

No further disassembly is required to test the stator or power cable.

To disconnect the power cable (16), remove the nuts (18) securing the terminal gland (15) to the terminal housing (1). Slide the gland back along the power cable. Oil the bushing (20) and terminal hous-ing bore and pull firmly on the cable. (Allow the oil to leak in around the bushing by agitating the cable in the bore.) After the bushing has been loosened, the cable should pull out far enough to expose the bushing. Apply oil on the cable jacket and slide the bushing back along the cable. Quite often, pressure exerted on the bushing will deform the cable jacket. If such happens, additional oil and effort will be required to remove the bushing.

NOTE

If the rubber bushing cannot be removed from the terminal housing as indicated, it may be necessary to cut the bushing into small pieces or cut the cable.

Push approximately 6 inches (152 mm) of the power cable into the terminal housing so that the terminal plate comes free of the terminal housing. This should permit access to the power cable connections in the terminal plate.

NOTE

***Do not** remove the heat shrink tubing from the power cable leads unless the power cable or terminals require replacement. If replacement is required, the connections between the power cable leads and the terminals **must be** resealed with heat shrink tubing before applying the silicone adhesive (see **Terminal Housing And Power Cable Reassembly**).*

To disconnect the power cable (16) from the terminal housing, pull the terminal plate away from the terminal housing. When shipped from the factory, the connections between the power cable leads and the terminal collars (2) were encapsulated in heat-shrink tubing (8) and bonded to the terminal plate with silicone adhesive (not shown). (In service, the adhesive may have been replaced by potting compound during previous repair.) If damage is extensive and the terminal plate and terminals are to be replaced, simply cut the power cable leads above the terminal collars and heat-shrink tubing, and discard the terminal plate and terminals.

If damage is not extensive and it is necessary to replace the terminal plate or terminal components, carefully cut away the tubing and adhesive. Disconnect the power cable leads from the terminal posts, and separate the terminal plate (4) from the terminal housing (1). Unscrew the terminal posts (7), and remove the terminal collars (2), posts and dyna seal washers (5) from the terminal plate.

Remove the hardware (11 and 12) securing the green and yellow ground lead terminals to the terminal housing. Reinstall the hardware in the terminal housing.

The terminal washer (21), bushing (20), cable grip (17) and gland (15) can now be removed from the cable.

See **Terminal Housing/Power Cable Reassembly** if no further disassembly is required.

Intermediate And Motor Housing Disassembly

(Figure E-1)

See **PUMP END DISASSEMBLY**, and remove all pump end and seal components.

With the pump end disassembled and the motor cavity drained of oil, secure the pump in an inverted position. Remove the hardware (35 and 36) securing the intermediate (26) to the motor housing (41). **Do not** remove the hardware (24 and 25) around the rotor shaft at this time.

Hook a three-leg-sling in the intermediate flange holes and hoist the intermediate, rotor and shaft (31), bearing cap (30) and both ball bearings (29 and 32) from the motor housing as an assembly. If necessary, tap around the parting surfaces with a soft-faced mallet to loosen the seal between the intermediate and motor housing. Remove the motor housing gaskets (39 and 40).

Cover the motor housing with a clean, lint free cloth to avoid contamination by dirt or other foreign material.

Rotor And Bearing Removal

(Figure E-1)

Set the intermediate and rotor assembly on a clean work surface. Leave the lifting slings attached and reduce the tension slightly. Remove the hardware (24 and 25) securing the bearing cap to the intermediate. Steady the rotor and separate the intermediate. If necessary, tap the impeller end of the rotor shaft with a soft-faced mallet to loosen the seal between the lower ball bearing (29) and the intermediate bore.

CAUTION

To prevent damage during removal from the shaft, it is recommended that bearings be cleaned and inspected **in place**. It is **strongly** recommended that the bearings be replaced **any** time the shaft and rotor assembly is removed.

Before removing the bearings from the rotor shaft, clean and inspect the bearings **in place** as follows. Clean the bearings thoroughly in **fresh** cleaning solvent. Dry the bearings with filtered compressed air and coat with light oil.

WARNING!

Most cleaning solvents are toxic and flammable. Use them only in a well ventilated area; free from excessive heat, sparks, and flame. Read and follow all precautions printed on solvent containers.

Rotate the bearings by hand to check for roughness or binding and inspect the bearing balls. If rotation is rough or the bearing balls discolored, replace the bearings.

The bearing tolerances provide a tight press fit onto the shaft and a snug slip fit into the motor housing and intermediate bore. Replace the shaft and rotor (as an assembly), the motor housing or intermediate if the proper bearing fit is not achieved.

The lower bearing (29) is secured to the shaft by a tight press fit. Install two 3/8—16 UNC x 6—inch long capscrews (not supplied) 180° apart in the tapped holes in the bearing cap (30). Use a bearing puller in conjunction with the capscrews to remove the lower bearing and bearing cap as an assembly.

Separate the bearing cap and gasket (28) from the lower ball bearing.

If replacement is required, use a bearing puller to remove the upper ball bearing from the rotor shaft.

Stator Removal

(Figure E-1)

Do not remove the stator (38) unless it is defective (open windings, insulation resistance low, or stator core damaged). If the stator must be removed, remove the terminal housing as indicated in **Terminal Housing And Power Cable Disassembly.**

Position an expandable tool, such as a split disc, approximately 2 inches (51 mm) inside the stator, and expand it tightly and squarely on the I.D. Attach a lifting device to the lifting eye of the tool, and raise the assembly approximately 1 inch (25 mm) off the work surface.

The motor housing (41) must be heated with a torch to expand it enough for the stator to be removed. Apply heat evenly to the outside of the motor housing; excessive heat is not required. Use a soft-faced mallet to rap alternate edges of the motor housing, and "walk" the stator out. Continue this process until the stator clears the motor housing.

CAUTION

Take care not to damage the stator end turns during removal from the motor housing.

After the stator has been removed, wrap it in clean, dry rags or other suitable material until reassembly. The stator **must** be kept clean and dry. When handling the stator, **do not** set it on the end windings; lay it on its side.

CAUTION

Do not attempt to rewind the stator. Winding tolerances and materials are closely controlled by the manufacturer, and any deviation can cause damage or operating problems. Replace the stator, or return it to one of The Gorman-Rupp Authorized Submersible Repair Centers or The Gorman-Rupp factory, if defective.

Relief Valve

(Figure E-1)

It is recommended that the relief valve assembly (60) be replaced at each overhaul, or at any time the pump motor overheats and activates the valve. Never replace this valve with a substitute which has not been specified or provided by the Gorman-Rupp Company.

It is not necessary to remove the heavy pipe nipple (57) to remove the pressure relief valve. If the nipple is removed, apply 'Loctite Retaining Compound No. 680 or No. 620' or equivalent compound on both ends of the nipple **only**.

When installing the relief valve, use 'Loctite Pipe Sealant With Teflon No. 592' or equivalent compound on the threads. Position the valve out of the way, next to the terminal housing (1, Figure E–2) so that there is enough room for the terminal housing to clear.

Hoisting Bail

(Figure E-1)

If the hoisting bail (47) requires replacement, remove the hardware (43, 44 and 45) securing the bail to the motor housing. Make sure the bushings (46) are in place when installing the hoisting bail.

MOTOR REASSEMBLY

CAUTION

Do not attempt to rewind the stator. Winding tolerances and materials are closely controlled by the manufacturer, and any deviation can cause damage or operating problems. Replace the stator, or return it to one of The Gorman-Rupp Authorized Submersible Repair Centers or The Gorman-Rupp factory, if defective.

NOTE

Reuse of old O-rings, gaskets, shaft seal parts will result in premature leakage or reduce pump performance. It is strongly recommended that new gaskets and shaft seal assemblies be used during reassembly (see the parts lists for numbers).

Stator Installation

(Figure E-1)

NOTE

Stator installation involves heating the motor housing. This process must be done quickly; therefore it is recommended that these steps be performed by two people to promote efficient installation of the stator.

Clean all gasket and O-ring surfaces of the motor housing (41), completely removing any old gasket and cement material. Inspect the sealing surfaces for burrs, nicks and pits which could cause a poor seal, and replace defective parts as required.

Thoroughly clean the inside of the motor housing with fresh solvent. The interior **must** be dry and free of dirt or lint.

WARNING!

Most cleaning solvents are toxic and flammable. Use them only in a well ventilated area; free from excessive heat, sparks, and flame. Read and follow all precautions printed on solvent containers.

After the motor housing is thoroughly cleaned, position it on a flat surface with the discharge end down. Do not unwrap the stator (38) until the motor housing has been prepared for stator installation. The stator **must** be kept clean and dry. When handling the stator, do not set it on the end windings; lay it on its side and block it from rolling.

Test the new stator as indicated in **Electrical Testing** in **TROUBLESHOOTING**, Section D, to ensure that no damage has occurred during transit or handling.

NOTE

Remove any drops of varnish from the ends of the stator before installation to ensure proper stack-up height when assembled.

Position an expandable tool, such as a split disc, approximately 2 inches (51 mm) down inside the stator (opposite the lead wire end), and expand it tightly and squarely on the I.D. Attach a lifting device to the lifting eye of the tool, and carefully lift the assembly. Take care not to damage the stator end turns. Slip a sleeve over the stator leads, or tape them together to protect them during installation.

NOTE

Stator installation involves heating the motor housing. This process must be done quickly to allow the stator to slide into the motor housing before the housing cools.

Heat the motor housing with a torch to expand it enough for the stator to be installed; when heating the motor housing, **make sure** that the stator is clear to avoid a fire hazard, or damage to the windings. Apply heat evenly to the outside of the housing; excessive heat is not required.

When the motor housing is sufficiently heated, position the stator so that slot in the stator aligns with the plate on the inside of the motor housing and so that the leads are in line with the terminal opening. Carefully lower the stator into the motor housing until fully seated against the housing shoulder. Be careful not to damage the stator lead insulation during reassembly. If the stator “cocks” in the motor housing, remove it and try again.

After the stator is fully and squarely seated against the motor housing shoulder, remove the expandable disc tool. Untape or remove the protective sleeve from the stator leads.

Cover the motor housing with a clean, lint-free cloth while the rotor is being assembled.

Bearing Installation

(Figure E-1)

Inspect the rotor shaft (31) for damaged threads, scoring in the seal area, and a nicked or damaged tapered end. If the bearings were removed, inspect the bearing areas for scoring or galling. Remove nicks and burrs with a fine file or emery cloth. Inspect the rotor area for separated laminations. If the shaft is bent or damaged, or if the laminations are separated, replace the shaft and rotor (a single assembly).

CAUTION

To prevent damage during removal from the shaft, it is recommended that bearings be cleaned and inspected **in place**. It is **strongly** recommended that the bearings be replaced **any** time the shaft and rotor assembly is removed.

The bearings may be heated to ease installation. An induction heater, hot oil bath, electric oven, or hot plate may be used to heat the bearings. Bearings should **never** be heated with a direct flame or directly on a hot plate.

NOTE

*If a hot oil bath is used to heat the bearings, both the oil and the container must be **absolutely** clean. If the oil has been previously used, it must be **thoroughly** filtered.*

Heat the upper bearing (32) to a uniform temperature **no higher than** 250°F (120°C). Slide the bearing onto the shaft until it is fully seated against the shaft shoulder. Do this quickly, in one continuous motion, to prevent the bearing from cooling and sticking on the shaft.

WARNING!

Use caution when handling hot bearings to prevent burns.

Clean the bearing cap (30) and position it over the lower bearing (29) **before** heating.

NOTE

Position the cap on the bearing, so that when installed on the shaft, the bearing will be positioned as indicated in Figure E—4.

Heat the lower bearing and cap to a uniform temperature **no higher than** 250°F (120°C). Slide the assembled cap and bearing onto the shaft until the bearing is fully seated against the shaft shoulder. Do this quickly, in one continuous motion, to prevent the bearing from cooling and sticking on the shaft.

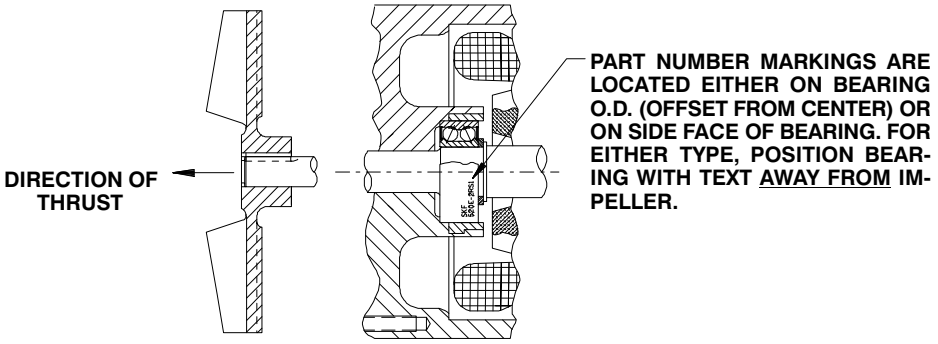

Figure E-4. Bearing Installation

After the bearings have been installed and allowed to cool, check to ensure that they have not moved out of position in shrinking. If movement has occurred, use a suitable sized sleeve and a press to reposition the bearings. Make certain that they are seated squarely against the shaft shoulders.

If heating the bearings is not practical, use a suitable sized sleeve and an arbor (or hydraulic) press to install the bearings on the shaft.

CAUTION

When installing the bearings onto the shaft, **never** press or hit against the outer race, balls, or ball cage. Press **only** on the inner race.

Rotor Installation

(Figure E-1)

Use **fresh** solvent to clean all gasket and O-ring surfaces of the motor housing (41) and intermediate (26), completely removing any old gasket and cement material. Inspect the sealing surfaces for burrs, nicks and pits which could cause a poor seal. Repair or replace as require.

WARNING!

Most cleaning solvents are toxic and flammable. Use them only in a well ventilated area free from excessive heat, sparks, and flame. Read and follow all precautions printed on solvent containers.

Carefully ease the rotor (31), bearing cap (30) and assembled bearings (29 and 32) into the interme-

diate (26) so that the lower bearing (29) seats squarely in the intermediate bearing bore.

Secure the gasket (28) to the cap with a light coating of gasket adhesive.

Position the intermediate over the bearing and align the mounting holes with those in the bearing cap. Apply 'Never-Seez' or equivalent compound to the threads of the capscrews (24). Install the capscrews and lockwashers (25); torque the capscrews evenly in a cross-sequence to 20 ft. lbs. (240 in. lbs. or 2,8 m. kg.).

Motor Housing And Intermediate Reassembly

(Figure E-1)

Use **fresh** solvent to clean the bores and all gasket surfaces of the motor housing (41), completely removing any old gasket and cement material. Inspect the sealing surfaces for burrs, nicks and pits which could cause a poor seal, and repair or replace as required.

WARNING!

Most cleaning solvents are toxic and flammable. Use them only in a well ventilated area; free from excessive heat, sparks, and flame. Read and follow all precautions printed on solvent containers.

Apply '3M Gasket Adhesive No. 847' or equivalent compound to the motor housing gaskets (39 and 40). Position the gaskets on the motor housing, making sure the gaskets are properly seated and the adhesive holds them securely.

Install a three-leg sling in the intermediate flange holes and lower the assembled intermediate and rotor assembly into the motor housing. Use caution to guide the upper bearing into the motor housing bearing bore. Tap the intermediate with a soft-faced mallet until it mates tightly with the motor housing.

Apply 'Never-Seez' or equivalent compound on the threads of the motor housing studs (41). Secure the intermediate to the motor housing with the hardware (35 and 36); torque the nuts evenly in a cross sequence to 120 ft. lbs. (1440 in. lbs. or 16,6 m. kg.).

Refer to **PUMP END REASSEMBLY**, and reassemble the pump end components.

Terminal Housing And Power Cable Reassembly And Installation

(Figure E-2)

WARNING!

The electrical power used to operate this pump is high enough to cause injury or death. Make certain that the control handle on the control box is in the OFF position and locked out, or that the power supply to the control box has been otherwise cut off and locked out, before attempting to open or service the pump assembly. Tag electrical circuits to prevent accidental startup. Obtain the services of a qualified electrician, and refer to the wiring diagram(s) in INSTALLATION, Section B, to make electrical connections.

Clean the exterior of the power cable with warm water and mild detergent. Check for obvious physical damage. Check the cable for continuity and insulation resistance (see **Electrical Testing** in **TROUBLESHOOTING**). **Do not** attempt repairs except to cut off either end of the cable; **splicing is not recommended**. Reinstall any wire tags or terminals which may have been removed.

WARNING!

Never attempt to alter the length or repair any power cable with a splice. The pump motor and cable must be completely waterproof. Injury or death may result from alterations.

(Figure E-2)

Use oil to lightly lubricate the outside of the pump power cable (16), and the bores of the terminal housing (1), terminal gland (15) and gland bushing (20) for ease of assembly. Slide the terminal gland, cable grip (17), gland bushing, terminal washer (21) and terminal housing on the cable, allowing approximately 3 ft. (0,9 m) of cable to extend beyond the terminal housing. Temporarily tape the green and yellow ground wires to the cable.

Sealing Terminal Housing Connections With Silicone Adhesive

(Figure E-2)

WARNING!

Do not attempt to operate this pump unless the power cable leads are properly sealed in the terminal housing. Moisture entering the terminal housing could cause a short circuit, resulting in pump damage and possible serious injury or death to personnel.

When shipped from the factory, the cable leads and terminal collars (2) were encapsulated in heat-shrink tubing (8), and bonded to the terminal plate (4) with silicone adhesive to provide a water-tight seal. If this insulating material has been damaged or removed during maintenance, **it must** be replaced using materials and equipment approved by Gorman-Rupp (see the Parts List Manual for repair kits).

NOTE

*Heat-shrink tubing **must** be used to seal the power and control cable leads to the terminals before bonding the leads to the terminal plate. If silicone adhesive is not available in the field, a commercially available potting kit may be used to bond the connections to the terminal plate. If this alternate sealing method is used, refer to the instructions in **Sealing Terminal Plate Connections With Potting Compound**. Use **only** materials and heating equipment approved by Gorman-Rupp for field repairs.*

Before resealing the power and control cables, remove all the old adhesive material (or potting compound) from the leads, terminal collars, and terminal plate. Inspect all parts for damage, and replace as required. If the rubber bonding material on the terminal plate (19) is severely worn or cracked, the terminal plate must be replaced. If the bonding material has been noticeably compressed, it should be supplemented with two gaskets contained in the overhaul gasket kit (see Options listed in the Parts List Manual).

NOTE

Clean the cable leads and terminal plate in the areas to be sealed with cleaning solvent. Incomplete sealing will occur if the surfaces are dirt, oil or grease coated.

Assemble the terminal posts (7), dyna seal washers (5), and terminal collars (2) to the terminal plate as shown in Figure E−2.

NOTE

Both the power cable and motor conductor leads should be tinned prior to reassembly.

Slide a length of heat-shrink tubing (8) up over each of the power cable leads. Insert the leads in the terminal collars and secure them using the allen head setscrews (3). Slide the tubing down each lead until the terminals are covered and the tubing contacts the terminal plate. The tubing **must** extend up the leads far enough to ensure a good seal.

Carefully heat each tube with a commercially available hot air gun capable of producing 750°F (399°C), and shrink the tubes around the cable leads and terminal collars.

CAUTION

Use **only** Dow-Corning 737 Silicone Adhesive (see the Parts List Manual for the part number) or potting compound for sealing terminal housing connections. Use of unapproved sealing products will void the pump warranty.

NOTE

***Do not use** a mold or reservoir with the silicone adhesive.*

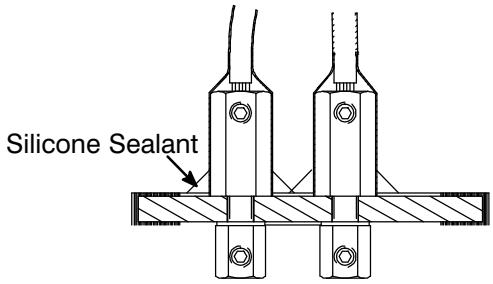

Figure E-5. Silicone Adhesive Sealing

See Figure E−6 and check terminal locations. Apply a 1/4 to 3/8 in. (6,4 to 9,7 mm) thick layer (maximum) of silicone adhesive around each of the ter-

minal posts as shown in Figure E–5. Remove any adhesive from gasketed surfaces.

WARNING!

All air pockets, voids or gaps in the silicone sealant must be removed to ensure a water-tight seal in the terminal housing. Otherwise, moisture entering the terminal housing could cause a short circuit, resulting in pump damage and possible serious injury or death to personnel.

Allow the adhesive to cure for at least 24 hours before securing the terminal housing to the motor housing.

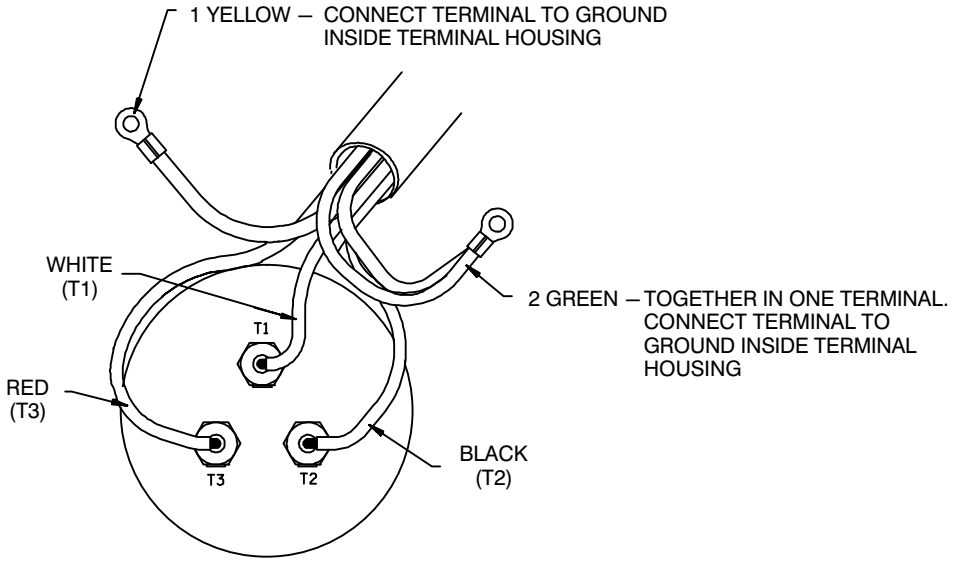

Figure E-6. Terminal Housing Wiring Connections

Sealing Terminal Plate Connections With Potting Compound

(Figure E-2)

Potting compound and silicone adhesive have the same electrical properties when correctly applied. Silicone adhesive is used at the factory to facilitate production. A commercially available potting kit (Products Research Corp., part number PR-1201-Q Class 1 potting compound, Chemseal potting compound, part number GS3100, or equivalent) may also be used to seal the connections.

Clean and assemble all terminal components as indicated in **Sealing Terminal Plate With Silicone Adhesive**. Use medium grit sandpaper to prepare the surface of the terminal plate in the area where the potting mold will be installed.

NOTE

Clean the cable lead and terminal plate in the areas to be potted with cleaning solvent before potting. Potting compound will not adhere properly to oil or grease coated surfaces.

Trim the potting mold so it is just long enough to cover the terminal collars (or use the adhesive reservoir). Slide the potting mold up over the leads of the power cable and control cable.

Secure each cable lead as described in the previous section. Slide the potting mold down over the terminal collars and onto the terminal plate. Hang the cable in a vertical position with the terminal plate horizontal. The cable leads and terminals should be centered in the potting mold. Use quick-setting cement, such as '3-M Weather Seal' to secure the potting mold to the terminal plate.

WARNING!

Most potting base compounds contain toluene; use adequate ventilation and avoid prolonged breathing of vapors. Most potting accelerators contain lead;

avoid ingestion or prolonged contact with the skin. Read and follow all warnings and recommendations accompanying the potting kit.

See the instructions with the potting kit regarding application life and setting and curing time. Mix the base compound and accelerator and fill the mold until the electrical connections are completely insulated. Tamp the potting material to eliminate air bubbles and ensure the material has completely covered the area around the terminal posts.

NOTE

The potting compound must completely cover the terminal collar and lead connections.

When potting has been completed, leave the terminal plate assembly undisturbed until the potting material has cured. Complete curing usually takes about 24 hours. Curing time can be shortened by using a heat lamp, but be careful not to melt the potting or potting mold, or burn the cable. When the potting material is no longer “tacky” to the touch, it has cured.

Terminal Housing Installation

(Figure E-2)

After the terminal plate has been sealed, slide the terminal housing down the cable. Untape the ground leads and secure the terminals (11 and 12). **Be sure** the leads make good contact with the housing.

Pull gently on the cable to remove any excess length from within the terminal housing. The terminal plate should fit loosely against the terminal housing.

Lubricate the upper bore of the terminal housing, and slide the gland washer (21), bushing (20) and cable grip (17) into place. Slide the terminal gland (15) into place and install the nuts (18). Do not fully tighten the nuts at this time.

Attach the appropriate motor lead (T1, T2, T3) to each terminal post (7) using the allen head setscrews (6).

Position the terminal housing and terminal plate against the upper motor housing. If required, rotate the terminal housing and twist the motor leads to remove excess slack.

(Figure E-1)

Coat the threads of the motor housing studs (55) with ‘Never-Seez’ or equivalent compound, and secure the terminal housing assembly to the motor housing with the hardware (49); torque the nuts evenly in a cross sequence to 20 ft. lbs. (240 in. lbs. or 2,8 m. kg.). Tighten the nuts (18, Figure 2) drawing the terminal gland (15) down into the terminal bore. **Do not** overtighten and damage the terminal gland or hardware.

NOTE

A .12 in. (3,05 mm) gap is required between the terminal gland cap flange and the terminal housing when tighten the nuts.

See **FINAL ASSEMBLY** and **VACUUM TESTING** followed by **LUBRICATION**.

FINAL ASSEMBLY

(Figure E-1)

If the discharge flange (51) was removed from the motor housing, replace the discharge flange gasket (52). Apply ‘Never-Seez’ or equivalent compound on the flange studs (42), and secure the flange with the nuts (33).

If the hoisting bail (47) was removed, install the bail bushings (46) and secure the bail to the motor housing with the hardware (43, 44 and 45).

Connect the discharge hose, and reposition the pump. If rigid piping or long hose is used, reposition the pump, then connect the piping.

VACUUM TESTING

To ensure the water-tight integrity of the pump, it is recommended that the motor and seal cavities be vacuum tested any time the seal(s) and/or motor are serviced.

Drain **all** of the oil from **both** the seal and motor cavities before performing the test. Oil within the cavities will be drawn into the system, resulting in damage to the vacuum pump or manometer.

Use a manometer with a range of 30 to 0 to 30 inches of mercury to perform the test. **Do not** use a vacuum gauge. Vacuum gauges are not sensitive enough to detect minor leaks.

It is recommended that a vacuum pump be used to draw the vacuum on the cavities. If a vacuum pump is not available, a compressor/venturi system may be used. If the compressor/venturi cannot draw the higher vacuum level shown in Table E−1, draw the motor cavity vacuum down as far as the system will allow, then draw the seal cavity down so the differential between the two cavities is the same as the differential between the vacuum readings shown in the table.

Install full-closing ball-type shutoff valves with quick-disconnect fittings in the pipe plug holes in both the motor and seal cavities. Test the motor cavity for its full duration first, then use the shutoff valve to maintain the motor cavity vacuum while testing the seal cavity. The motor cavity vacuum **must** be higher than the vacuum in the seal cavity to prevent separation of the seal faces or unseating the stationary seal seat between the seal and motor cavities.

Figure E−7 shows a simple schematic for setting up either a vacuum pump or a venturi/compressor test system.

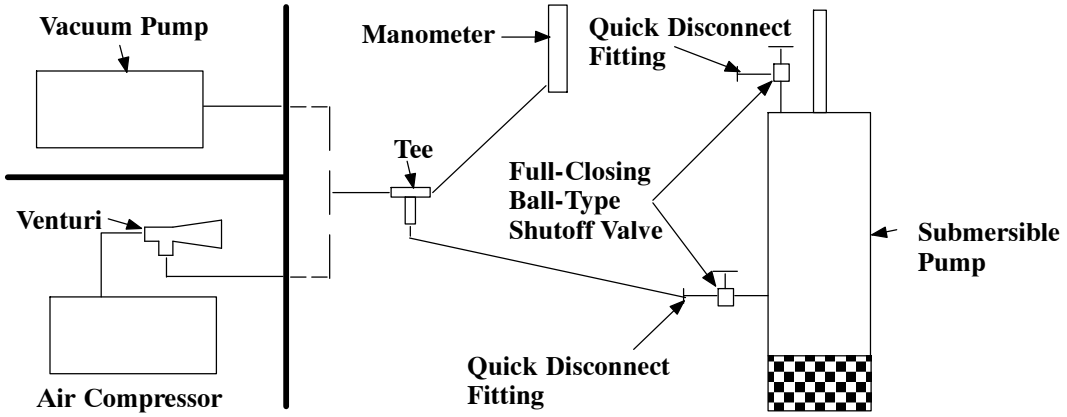

Figure E-7. Vacuum Test System

Table E−1 shows the vacuum to be drawn on each cavity, and the duration to maintain each vacuum reading. **Any** change in vacuum reading during the test indicates a leak which **must** be identified and corrected before putting the pump back into service.

Table E-1. Vacuum Test Data

Pump Model	Motor Cavity Vacuum (In. Hg.)	Duration (Minutes)	Seal Cavity Vacuum (In. Hg.)	Duration (Minutes)
S8B	30	8	20	2

LUBRICATION

Seal Cavity

Check the oil level in the seal cavity before initial startup, after the first two weeks of operation, and every month thereafter.

WARNING!

Check the oil level only when the pump is cool. If the oil level plug is removed when the pump is hot, pressure in the seal cavity can cause hot oil to be ejected as the plug is removed.

To check the seal cavity oil, lay the pump on its side and remove the seal cavity plug (27) in the intermediate. Tip the pump and drain off a small amount of oil into a transparent cup. If the oil level is abnormally low, or the color milky or dark, refer to **Draining Oil From Seal Cavity** in this section for instructions and troubleshooting tips. If the oil is clear, apply 'Loctite Pipe Sealant With Teflon No. 592' or equivalent to the threads of the pipe plug, before reinstalling the plug.

To fill the seal cavity, remove the pipe plug (27) and add the recommended grade of submersible pump oil. Apply 'Loctite Pipe Sealant With Teflon No. 592' or equivalent to the threads of the pipe plug, before reinstalling the plug.

See Table E−2 for quantity of lubricant when lubricating a dry (overhauled) pump. See Table E−3 for lubricant specifications.

The grade of lubricant used is critical to the operation of this pump. Use premium quality hydraulic oil as specified in Table E−3. Oil must be stored in a clean, tightly closed container in a reasonably dry environment.

Table E-2. Oil Quantity

Pump Model	Seal Cavity	Motor Cavity
S8B1	224 ounces (6,6 liters)	768 ounces (22,7 liters)

Table E-3. Pump Oil Specifications

Specifications:	
Type	Premium high viscosity index, anti-wear hydraulic oil
Viscosity (SSU @ 104°F [40°C])	110 to 155
Viscosity (SSU @ 210°F [100°C])	40 to 50
Dielectric	26,000 (volts-min)
Recommended supplier:	
Gulf Oil Company	Gulf Harmony AW Hydraulic Fluid MG 32
Acceptable alternate suppliers:	
Gulf Oil Company	Gulf Harmony 32 AW
Texas Oil Company	Rando HD 32 or HD AZ 32
Sun Oil Company	Sunvis 816 or 916
BP (Also Boron)	Energol-HLP 32
Shell Oil Company	Tellus 32, Tellus T-23 or T32
ARCO	Duro 32
Exxon (Also Esso)	Nuto H 32
Petro-Canada	Harmony HVI 22

Motor Housing Cavity

With the pump in an upright position, remove the pipe cap (59) on the top of the pump. See Table E−2 and add the recommended quantity of lubricant to the motor cavity. **Maintain the oil at this level**. Apply 'Loctite Pipe Sealant With Teflon No. 592' or equivalent sealant to the threads of the street tee assembly (58). Reinstall and tighten the cap.



CAUTION

Never attempt to fill the motor cavity through the drain plug (27) opening. A volume of air must be trapped above the motor to permit thermal expansion of the motor oil.

For Warranty Information, Please Visit
www.grpumps.com/warranty
or call:
U.S.: 419-755-1280
Canada: 519-631-2870
International: +1-419-755-1352