ACDEGH

OM-03888-OE01
February 15, 1993

INSTALLATION, OPERATION, AND MAINTENANCE MANUAL

WITH PARTS LIST

GORMAN-RUPP

10 SERIES PUMP

MODEL
12D–6LD325

THE GORMAN-RUPP COMPANY • MANSFIELD, OHIO
GORMAN-RUPP OF CANADA LIMITED • ST. THOMAS, ONTARIO, CANADA Printed in U.S.A.

©Copyright by the Gorman-Rupp Company

WARNING!

The engine exhaust from this product contains chemicals known to the State of California to cause cancer, birth defects or other reproductive harm.

TABLE OF CONTENTS

INTRODUCTION ..... **PAGE I – 1**

SAFETY - SECTION A ..... **PAGE A – 1**

INSTALLATION – SECTION B ..... **PAGE B – 1**

- Pump Dimensions ..... PAGE B – 1
- PREINSTALLATION INSPECTION ..... PAGE B – 2
- POSITIONING PUMP ..... PAGE B – 2
  - Lifting ..... PAGE B – 2
  - Mounting ..... PAGE B – 2
  - Clearance ..... PAGE B – 2
- SUCTION AND DISCHARGE PIPING ..... PAGE B – 2
  - Materials ..... PAGE B – 3
  - Line Configuration ..... PAGE B – 3
  - Connections to Pump ..... PAGE B – 3
  - Gauges ..... PAGE B – 3
- SUCTION LINES ..... PAGE B – 3
  - Fittings ..... PAGE B – 3
  - Strainers ..... PAGE B – 3
  - Sealing ..... PAGE B – 3
  - Suction Lines In Sumps ..... PAGE B – 3
  - Suction Line Positioning ..... PAGE B – 4
- DISCHARGE LINES ..... PAGE B – 4
  - Siphoning ..... PAGE B – 4
  - Valves ..... PAGE B – 4
  - Bypass Lines ..... PAGE B – 5

OPERATION – SECTION C ..... **PAGE C – 1**

- PRIMING ..... PAGE C – 1
- STARTING ..... PAGE C – 1
- OPERATION ..... PAGE C – 1
  - Lines With a Bypass ..... PAGE C – 1
  - Lines Without a Bypass ..... PAGE C – 2
  - Leakage ..... PAGE C – 2
  - Liquid Temperature And Overheating ..... PAGE C – 2
  - Strainer Check ..... PAGE C – 2
  - Pump Vacuum Check ..... PAGE C – 2
- STOPPING ..... PAGE C – 2
  - Cold Weather Preservation ..... PAGE C – 3

TROUBLESHOOTING – SECTION D ..... **PAGE D – 1**

PUMP MAINTENANCE AND REPAIR - SECTION E ..... **PAGE E – 1**

- STANDARD PERFORMANCE CURVE ..... PAGE E – 1
- PARTS LISTS: ..... PAGE E – 3
  - Pump Model ..... PAGE E – 3
  - Pump End Assy ..... PAGE E – 5

TABLE OF CONTENTS
(continued)

PUMP AND SEAL DISASSEMBLY AND REASSEMBLY ..... PAGE E - 6
Suction Check Valve Disassembly ..... PAGE E - 6
Back Cover Removal ..... PAGE E - 6
Pump Casing Removal ..... PAGE E - 6
Impeller Removal ..... PAGE E - 7
Seal Removal and Disassembly ..... PAGE E - 7
Seal Reassembly and Installation ..... PAGE E - 7
Impeller Installation And Adjustment ..... PAGE E - 9
Pump Casing Installation ..... PAGE E - 9
Back Cover Installation ..... PAGE E - 9
Suction Check Valve Installation ..... PAGE E - 9
Final Pump Assembly ..... PAGE E - 9
LUBRICATION ..... PAGE E - 10
Seal Assembly ..... PAGE E - 10
Engine ..... PAGE E - 10

INTRODUCTION

This Installation, Operation, and Maintenance manual is designed to help you achieve the best performance and longest life from your Gorman-Rupp pump.

This pump is a 10 Series, semi-open impeller, self-priming centrifugal model with a suction check valve. It is close-coupled to a 5.4 H.P. single cylinder, four cycle, air cooled Lombardini diesel engine, model 6LD-325. The pump is designed for handling most non-volatile, non-flammable liquids containing specified entrained solids. The basic material of construction for wetted parts is gray iron with ductile iron impeller and steel wearing parts.

If there are any questions regarding the pump or its application which are not covered in this manual or in other literature accompanying this unit, please contact your Gorman-Rupp distributor, or write:

The Gorman-Rupp Company
P.O. Box 1217
Mansfield, Ohio 44901-1217

or

Gorman-Rupp of Canada Limited
70 Burwell Road
St. Thomas, Ontario N5P 3R7

The following are used to alert maintenance personnel to procedures which require special attention, to those which could damage equipment, and to those which could be dangerous to personnel:

DANGER!

Immediate hazards which WILL result in severe personal injury or death. These instructions describe the procedure required and the injury which will result from failure to follow the procedure.

WARNING!

Hazards or unsafe practices which COULD result in severe personal injury or death. These instructions describe the procedure required and the injury which could result from failure to follow the procedure.

CAUTION

Hazards or unsafe practices which COULD result in minor personal injury or product or property damage. These instructions describe the requirements and the possible damage which could result from failure to follow the procedure.

NOTE

Instructions to aid in installation, operation, and maintenance or which clarify a procedure.

SAFETY - SECTION A

This information applies to 10 Series engine driven pumps. Refer to the manual accompanying the engine before attempting to begin operation.

WARNING!

Before attempting to open or service the pump:

1. Familiarize yourself with this manual.
2. Shut down the engine and take precautions to ensure that the pump will remain inoperative.
3. Allow the pump to completely cool if overheated.
4. Check the temperature before opening any covers, plates, or plugs.
5. Close the suction and discharge valves.
6. Vent the pump slowly and cautiously.
7. Drain the pump.

WARNING!

This pump is designed to handle most non-volatile, non-flammable liquids containing specified entrained solids. Do not attempt to pump volatile, corrosive, or flammable liquids which may damage the pump or endanger personnel as a result of pump failure.

WARNING!

Use lifting and moving equipment in good repair and with adequate capacity to prevent injuries to personnel or damage to equipment. The bail is intended for use in lifting the pump assembly only. Suction and discharge hoses and piping must be removed from the pump before lifting.

WARNING!

After the pump has been installed, make certain that the pump and all piping or hose connections are tight, properly supported and secure before operation.

WARNING!

Do not operate the pump against a closed discharge valve for long periods of time. If operated against a closed discharge valve, pump components will deteriorate, and the liquid could come to a boil, build pressure, and cause the pump casing to rupture or explode.

WARNING!

Overheated pumps can cause severe burns and injuries. If overheating of the pump occurs:

1. Stop the pump immediately.
2. Ventilate the area.
3. Allow the pump completely to cool.
4. Check the temperature before opening any covers, plates, gauges, or plugs.
5. Vent the pump slowly and cautiously.
6. Refer to instructions in this manual before restarting the pump.

WARNING!

Do not remove plates, covers, gauges, pipe plugs, or fittings from an overheated pump. Vapor pressure within the pump can cause parts being disengaged to be ejected with great force. Allow the pump to cool before servicing.

WARNING!

Do not operate an internal combustion engine in an explosive atmosphere. When operating internal combustion engines in an enclosed area, make certain that exhaust fumes are piped to the outside. These fumes contain carbon monoxide, a deadly gas that is colorless, tasteless, and odorless.

WARNING!

Fuel used by internal combustion engines presents an extreme explosion and fire hazard. Make certain that all fuel lines are securely connected and free of leaks. Never refuel a hot or running engine. Avoid overfilling the fuel tank. Always use the correct type of fuel.

WARNING!

Never tamper with the governor to gain more power. The governor establishes safe operating limits that should not be exceeded. The maximum continuous operating speed for this pump is 3600 RPM.

INSTALLATION - SECTION B

Review all SAFETY information in Section A.

Since pump installations are seldom identical, this section offers only general recommendations and practices required to inspect, position, and arrange the pump and piping.

Most of the information pertains to a standard **static lift** application where the pump is positioned above the free level of liquid to be pumped.

If installed in a **flooded suction application** where the liquid is supplied to the pump under pressure, some of the information such as mounting, line configuration, and priming must be tailored to the specific application. Since the pressure supplied to the pump is critical to performance and safety, **be sure** to limit the incoming pressure to 50% of the maximum permissible operating pressure as shown on the pump performance curve (see Section E, Page 1). If the pump is fitted with a Gorman-Rupp double grease lubricated seal, the maximum incoming pressure must be reduced to 10 p.s.i.

For further assistance, contact your Gorman-Rupp distributor or the Gorman-Rupp Company.

Pump Dimensions

See Figure 1 for the approximate physical dimensions of this pump.

OUTLINE DRAWING

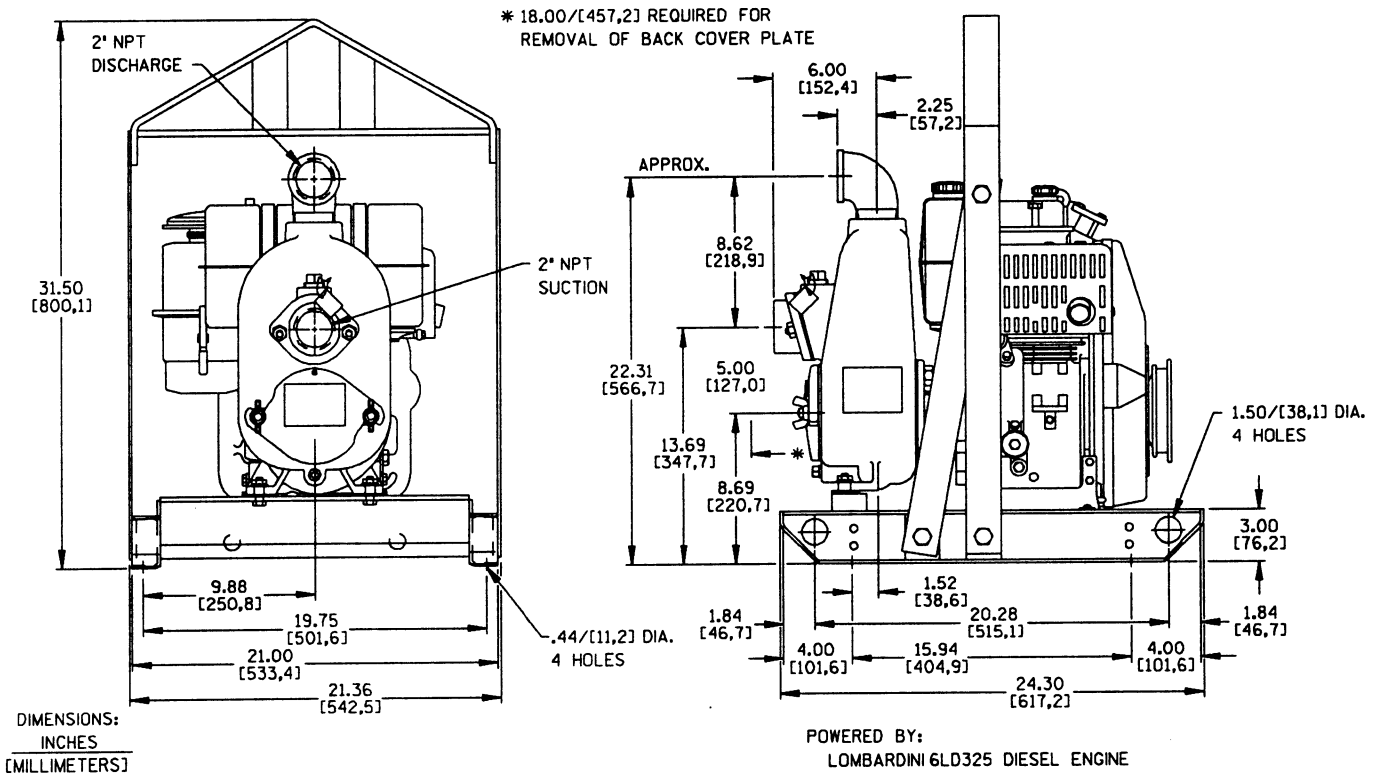

Figure 1. Pump Model 12D-6LD325

PREINSTALLATION INSPECTION

The pump assembly was inspected and tested before shipment from the factory. Before installation, inspect the pump for damage which may have occurred during shipment. Check as follows:

a. Inspect the pump and engine for cracks, dents, damaged threads, and other obvious damage.

b. Check for and tighten loose attaching hardware. Since gaskets tend to shrink after drying, check for loose hardware at mating surfaces.

c. Carefully read all tags, decals, and markings on the pump assembly, and perform all duties indicated.

d. Check levels and lubricate as necessary. Refer to **LUBRICATION** in the **MAINTENANCE AND REPAIR** section of this manual and perform duties as instructed.

e. If the pump and engine have been stored for more than 12 months, some of the components or lubricants may have exceeded their maximum shelf life. These **must be inspected or replaced** to ensure maximum pump service.

If the maximum shelf life has been exceeded, or if anything appears to be abnormal, contact your Gorman-Rupp distributor or the factory to determine the repair or updating policy. **Do not** put the pump into service until appropriate action has been taken.

POSITIONING PUMP

WARNING!

Use lifting and moving equipment in good repair and with adequate capacity to prevent injuries to personnel or damage to equipment. The bail is intended for use in lifting the pump assembly only. Suction and discharge hoses and piping must be removed from the pump before lifting.

Lifting

Use lifting equipment with a capacity of at least **1,035 pounds (470 kg)**. This pump weighs approximately **207 pounds (94 kg)**, not including the weight of accessories and optional wheel kit. Customer installed equipment such as suction and discharge piping **must** be removed before attempting to lift.

CAUTION

The pump assembly can be seriously damaged if the cables or chains used to lift and move the unit are improperly wrapped around the pump.

Mounting

Locate the pump in an accessible place as close as practical to the liquid being pumped. Level mounting is essential for proper operation.

The pump may have to be supported or shimmed to provide for level operation or to eliminate vibration.

If the pump has been mounted on a moveable base, make certain the base is stationary by setting the brake and blocking the wheels before attempting to operate the pump.

To ensure sufficient lubrication and fuel supply to the engine, **do not** position the pump and engine more than 15° off horizontal for continuous operation. The pump and engine may be positioned up to 30° off horizontal for **intermittent operation only**; however, the engine manufacturer should be consulted for continuous operation at angles greater than 15°.

Clearance

When positioning the pump, allow a minimum clearance of **18 inches (457,2 mm)** in front of the back cover to permit removal of the cover and easy access to the pump interior.

SUCTION AND DISCHARGE PIPING

Pump performance is adversely effected by increased suction lift, discharge elevation, and friction losses. See the performance curve and notes on

Page E-1 to be sure your overall application allows pump to operate within the safe operation range.

Materials

Either pipe or hose maybe used for suction and discharge lines; however, the materials must be compatible with the liquid being pumped. If hose is used in suction lines, it must be the rigid-wall, reinforced type to prevent collapse under suction. Using piping couplings in suction lines is not recommended.

Line Configuration

Keep suction and discharge lines as straight as possible to minimize friction losses. Make minimum use of elbows and fittings, which substantially increase friction loss. If elbows are necessary, use the long-radius type to minimize friction loss.

Connections to Pump

Before tightening a connecting flange, align it exactly with the pump port. Never pull a pipe line into place by tightening the flange bolts and/or couplings.

Lines near the pump must be independently supported to avoid strain on the pump which could cause excessive vibration, decreased bearing life, and increased shaft and seal wear. If hose-type lines are used, they should have adequate support to secure them when filled with liquid and under pressure.

Gauges

Most pumps are drilled and tapped for installing discharge pressure and vacuum suction gauges. If these gauges are desired for pumps that are not tapped, drill and tap the suction and discharge lines not less than 18 inches (457,2 mm) from the suction and discharge ports and install the lines. Installation closer to the pump may result in erratic readings.

SUCTION LINES

To avoid air pockets which could affect pump priming, the suction line must be as short and direct as possible. When operation involves a suction lift, the line must always slope upward to the pump from the source of the liquid being pumped; if the line slopes down to the pump at any point along the suction run, air pockets will be created.

Fittings

Suction lines should be the same size as the pump inlet. If reducers are used in suction lines, they should be the eccentric type, and should be installed with the flat part of the reducers uppermost to avoid creating air pockets. Valves are not normally used in suction lines, but if a valve is used, install it with the stem horizontal to avoid air pockets.

Strainers

If a strainer is furnished with the pump, be certain to use it; any spherical solids which pass through a strainer furnished with the pump will also pass through the pump itself.

If a strainer is not furnished with the pump, but is installed by the pump user, make certain that the total area of the openings in the strainer is at least three or four times the cross section of the suction line, and that the openings will not permit passage of solids larger than the solids handling capability of the pump.

This pump is designed to handle up to 1-3/16 inch (30,1 mm) diameter spherical solids.

Sealing

Since even a slight leak will affect priming, head, and capacity, especially when operating with a high suction lift, all connections in the suction line should be sealed with pipe dope to ensure an airtight seal. Follow the sealant manufacturer's recommendations when selecting and applying the pipe dope. The pipe dope should be compatible with the liquid being pumped.

Suction Lines In Sumps

If a single suction line is installed in a sump, it should be positioned away from the wall of the sump at a distance equal to 1-1/2 times the diameter of the suction line.

If there is a liquid flow from an open pipe into the sump, the flow should be kept away from the suction inlet because the inflow will carry air down into the

sump, and air entering the suction line will reduce pump efficiency.

If it is necessary to position inflow close to the suction inlet, install a baffle between the inflow and the suction inlet at a distance 1-1/2 times the diameter of the suction pipe. The baffle will allow entrained air to escape from the liquid before it is drawn into the suction inlet.

If two suction lines are installed in a single sump, the flow paths may interact, reducing the efficiency of one or both pumps. To avoid this, position the suction inlets so that they are separated by a distance equal to at least 3 times the diameter of the suction pipe.

Suction Line Positioning

The depth of submergence of the suction line is critical to efficient pump operation. Figure 2 shows recommended minimum submergence vs. velocity.

NOTE

The pipe submergence required may be reduced by installing a standard pipe increaser fitting at the end of the suction line. The larger opening size will reduce the inlet velocity. Calculate the required submergence using the following formula based on the increased opening size (area or diameter).

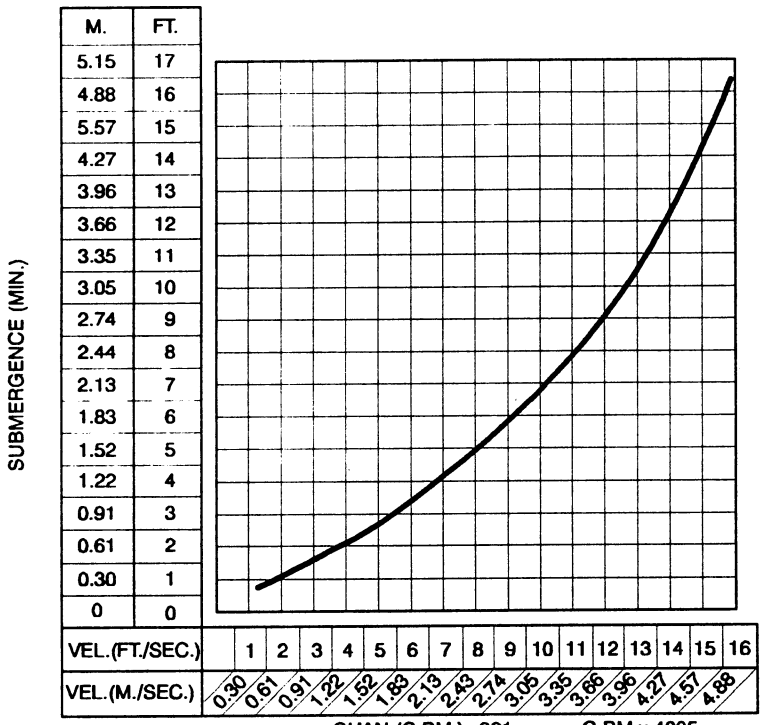

$$\text{VELOCITY (FT./SEC.)} = \frac{\text{QUAN.(G.P.M.)x.321}}{\text{AREA}} \quad \text{OR} \quad \frac{\text{G.P.M.x.4085}}{D^2}$$

$$\text{VELOCITY (M./SEC.)} = \frac{\text{FLOW (M./MIN)x21.22}}{\text{DIAMETER IN MM}^2} \quad \text{OR} \quad \frac{\text{FLOW (M}^3\text{/SEC.)}}{\text{AREA IN M}^2}$$

Figure 2. Recommended Minimum Suction Line Submergence vs. Velocity

DISCHARGE LINES

Siphoning

Do not terminate the discharge line at a level lower than that of the liquid being pumped unless a siphon breaker is used in the line. Otherwise, a siphoning action causing damage to the pump could result.

Valves

If a throttling valve is desired in the discharge line, use a valve as large as the largest pipe to minimize friction losses. Never install a throttling valve in a suction line.

A check valve in the discharge line is normally recommended, but it is not necessary in low discharge head applications.

With high discharge heads, it is recommended that a throttling valve and a system check valve be in-

stalled in the discharge line to protect the pump from excessive shock pressure and reverse rotation when it is stopped.

CAUTION

If the application involves a high discharge head, gradually close the discharge throttling valve before stopping the pump.

Bypass Lines

If a system check valve is used due to high discharge head, it may be necessary to vent trapped air from the top of the pump during the priming process. This may be accomplished by installing a bypass line from the top of the pump, back to the source of liquid. The end of the bypass line must be submerged. The line must be large enough to prevent clogging, but not so large as to affect pump discharge capacity.

OPERATION - SECTION C

Review all SAFETY information in Section A.

Follow the instructions on all tags, labels and decals attached to the pump.

WARNING!

This pump is designed to pump most non-volatile, non-flammable liquids containing specified entrained solids. Do not attempt to pump volatile, corrosive, or flammable liquids which may damage the pump or endanger personnel as a result of pump failure.

WARNING!

Never tamper with the governor to gain more power. The governor establishes safe operating limits that should not be exceeded. The maximum continuous operating speed for this pump is 3600 RPM.

PRIMING

Install the pump and piping as described in **INSTALLATION**. Make sure that the piping connections are tight, and that the pump is securely mounted. Check that the pump is properly lubricated (see **LUBRICATION** in **MAINTENANCE AND REPAIR**).

This pump is self-priming, but the pump should never be operated unless there is liquid in the pump casing.

CAUTION

Never operate this pump unless there is liquid in the pump casing. The pump will not prime when dry. Extended operation of a dry pump will destroy the seal assembly.

Add liquid to the pump casing when:

1. The pump is being put into service for the first time.
2. The pump has not been used for a considerable length of time.
3. The liquid in the pump casing has evaporated.

Once the pump casing has been filled, the pump will prime and reprime as necessary.

WARNING!

After filling the pump casing, reinstall and tighten the fill plug. Do not attempt to operate the pump unless all connecting piping is securely installed. Otherwise, liquid in the pump forced out under pressure could cause injury to personnel.

To fill the pump, remove the pump casing fill cover or fill plug in the top of the casing, and add clean liquid until the casing is filled. Replace the fill cover or fill plug before operating the pump.

STARTING

Consult the operations manual furnished with the engine.

OPERATION

Lines With a Bypass

Close the discharge throttling valve (if so equipped) so that the pump will not have to prime against the weight of the liquid in the discharge line. Air from the suction line will be discharged through the bypass line back to the wet well during the priming cycle. When the pump is fully primed and liquid is flowing steadily from the bypass line, open the discharge throttling valve. Liquid will then continue to circulate through the bypass line while the pump is in operation.

Lines Without a Bypass

Open all valves in the discharge line and start the engine. Priming is indicated by a positive reading on the discharge pressure gauge or by a quieter operation. The pump may not prime immediately because the suction line must first fill with liquid. If the pump fails to prime within five minutes, stop it and check the suction line for leaks.

After the pump has been primed, partially close the discharge line throttling valve in order to fill the line slowly and guard against excessive shock pressure which could damage pipe ends, gaskets, sprinkler heads, and any other fixtures connected to the line. When the discharge line is completely filled, adjust the throttling valve to the required flow rate.

Leakage

No leakage should be visible at pump mating surfaces, or at pump connections or fittings. Keep all line connections and fittings tight to maintain maximum pump efficiency.

Liquid Temperature And Overheating

The **maximum** liquid temperature for this pump is 110° F (43°C). Do not apply it at a higher operating temperature.

Overheating can occur if operated with the valves in the suction or discharge lines closed. Operating against closed valves could bring the liquid to a boil, build pressure, and cause the pump to rupture or explode. If overheating occurs, stop the pump and allow it to cool before servicing it. Refill the pump casing with cool liquid.

WARNING!

Do not remove plates, covers, gauges, pipe plugs, or fittings from an overheated pump. Vapor pressure within the pump can cause parts being disengaged to be ejected with great force. Allow the pump to cool before servicing.

Strainer Check

If a suction strainer has been shipped with the pump or installed by the user, check the strainer regularly, and clean it as necessary. The strainer should also be checked if pump flow rate begins to drop. If a vacuum suction gauge has been installed, monitor and record the readings regularly to detect strainer blockage.

Never introduce air or steam pressure into the pump casing or piping to remove a blockage. This could result in personal injury or damage to the equipment. If backflushing is absolutely necessary, **liquid pressure** must be limited to 50% of the maximum permissible operating pressure shown on the pump performance curve. (See Section E, Page 1.) If the pump is fitted with a Gorman-Rupp double grease lubricated seal, the maximum incoming pressure must be reduced to 10 p.s.i.

Pump Vacuum Check

With the pump inoperative, install a vacuum gauge in the system, using pipe dope on the threads. Block the suction line and start the pump. At operating speed the pump should pull a vacuum of 20 inches (508,0 mm) or more of mercury. If it does not, check for air leaks in the seal, gasket, or discharge valve.

Open the suction line, and read the vacuum gauge with the pump primed and at operation speed. Shut off the pump. The vacuum gauge reading will immediately drop proportionate to static suction lift, and should then stabilize. If the vacuum reading falls off rapidly after stabilization, an air leak exists. Before checking for the source of the leak, check the point of installation of the vacuum gauge.

STOPPING

Never halt the flow of liquid suddenly. If the liquid being pumped is stopped abruptly, damaging shock waves can be transmitted to the pump and piping system. Close all connecting valves slowly.

On engine driven pumps, reduce the throttle speed slowly and allow the engine to idle briefly before stopping.

CAUTION

If the application involves a high discharge head, gradually close the discharge throttling valve before stopping the pump.

After stopping the pump, remove the spark plug wire to ensure that the pump will remain inoperative.

Cold Weather Preservation

In below freezing conditions, drain the pump to prevent damage from freezing. Also, clean out any solids by flushing with a hose. Operate the pump for approximately one minute; this will remove any remaining liquid that could freeze the pump rotating parts. If the pump will be idle for more than a few hours, or if it has been pumping liquids containing a large amount of solids, drain the pump, and flush it thoroughly with clean water. To prevent large solids from clogging the drain port and preventing the pump from completely draining, insert a rod or stiff wire in the drain port, and agitate the liquid during the draining process. Clean out any remaining solids by flushing with a hose.

TROUBLESHOOTING - SECTION D

Review all SAFETY information in Section A.

WARNING!

Before attempting to open or service the pump:

1. **Familiarize yourself with this manual.**
2. **Shut down the engine and take precautions to ensure that the pump will remain inoperative.**
3. **Allow the pump to completely cool if overheated.**
4. **Check the temperature before opening any covers, plates, or plugs.**
5. **Close the suction and discharge valves.**
6. **Vent the pump slowly and cautiously.**
7. **Drain the pump.**

TROUBLE	POSSIBLE CAUSE	PROBABLE REMEDY
PUMP FAILS TO PRIME	Not enough liquid in casing.	Add liquid to casing. See **PRIMING**.
	Suction check valve contaminated or damaged.	Clean or replace check valve.
	Air leak in suction line.	Correct leak.
	Lining of suction hose collapsed.	Replace suction hose.
	Leaking or worn seal or pump gasket.	Check pump vacuum. Replace leaking or worn seal or gasket.
	Suction check valve or foot valve clogged or binding.	Clean valve.
	Suction lift or discharge head too high.	Check piping installation and install bypass line if needed. See **INSTALLATION**.
	Strainer clogged.	Check strainer and clean if necessary.

TROUBLE	POSSIBLE CAUSE	PROBABLE REMEDY
PUMP STOPS OR FAILS TO DELIVER RATED FLOW OR PRESSURE	Air leak in suction line.	Correct leak.
	Suction intake not submerged at proper level or sump too small.	Check installation and correct submergence as needed.
	Lining of suction hose collapsed.	Replace suction hose.
	Impeller or other wearing parts worn or damaged.	Replace worn or damaged parts. Check that impeller is properly centered and rotates freely.
	Impeller clogged.	Free impeller of debris.
	Pump speed too slow.	Check engine output; consult engine operation manual.
	Suction lift or discharge head too high.	Check piping installation and install bypass line if needed. See **INSTALLATION**.
	Leaking or worn seal or pump gasket.	Check pump vacuum. Replace leaking or worn seal or gasket.
	Strainer clogged.	Check strainer and clean if necessary.
PUMP REQUIRES TOO MUCH POWER	Pump speed too high.	Check engine output.
	Discharge head too low.	Adjust discharge valve.
	Liquid solution too thick.	Dilute if possible.
PUMP CLOGS FREQUENTLY	Discharge flow too slow.	Open discharge valve fully to increase flow rate, and run engine at maximum governed speed.
	Suction check valve or foot valve clogged or binding.	Clean valve.
	Discharge line clogged or restricted; hose kinked.	Check discharge lines; straighten hose.
EXCESSIVE NOISE	Cavitation in pump.	Reduce suction lift and/or friction losses in suction line. Record vacuum and pressure gauge readings and consult local representative or factory.
	Pumping entrained air.	Locate and eliminate source of air bubble.
	Pump or drive not securely mounted.	Secure mounting hardware.
	Impeller clogged or damaged.	Clean out debris; replace damaged parts.

PUMP MAINTENANCE AND REPAIR - SECTION E

MAINTENANCE AND REPAIR OF THE WEARING PARTS OF THE PUMP WILL MAINTAIN PEAK OPERATING PERFORMANCE.

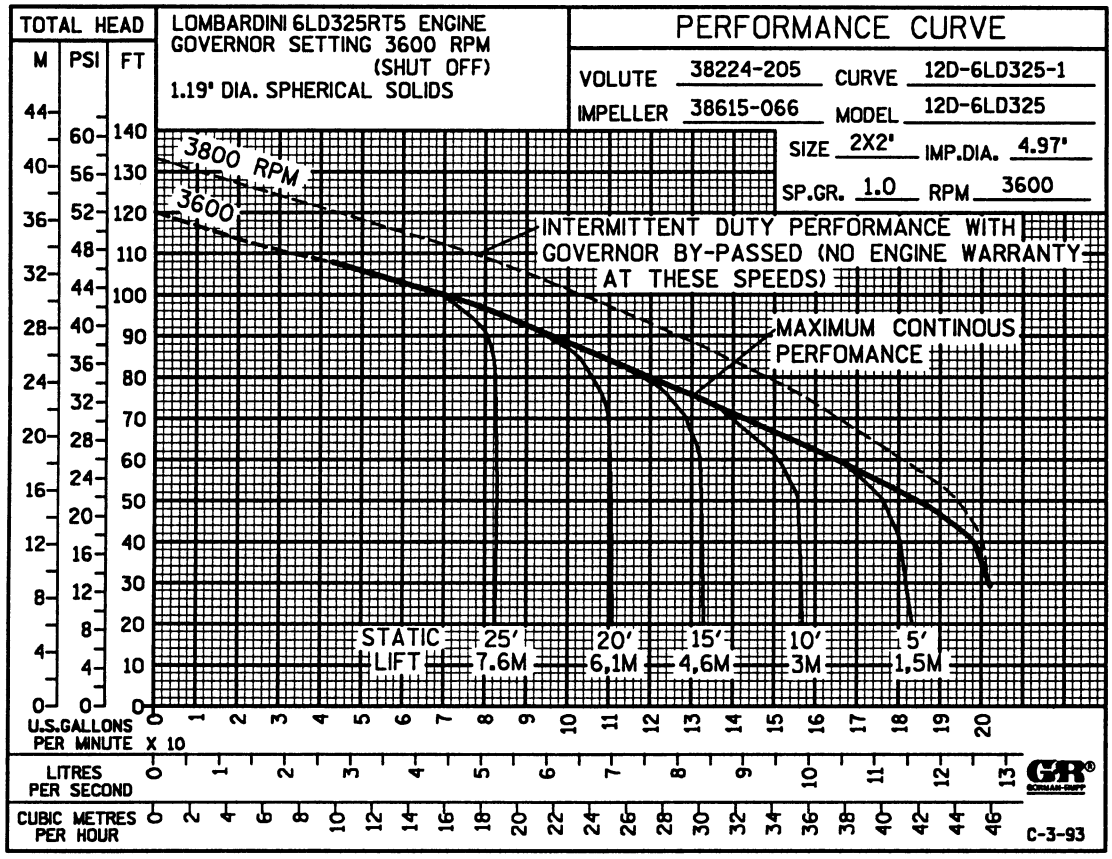

✳ **STANDARD PERFORMANCE FOR PUMP MODEL 12D-6LD325**

✳ Based on 70° F (21° C) clear water at sea level with minimum suction lift. Since pump installations are seldom identical, your performance may be different due to such factors as viscosity, specific gravity, elevation, temperature, and impeller trim.

If your pump serial number is followed by an "N", your pump is **NOT** a standard production model. Contact the Gorman-Rupp Company to verify performance or part numbers.

WARNING!

Never tamper with the governor to gain more power. The governor establishes safe operating limits that should not be exceeded. The maximum continuous operating speed for this pump is 3600 RPM.

SECTION DRAWING

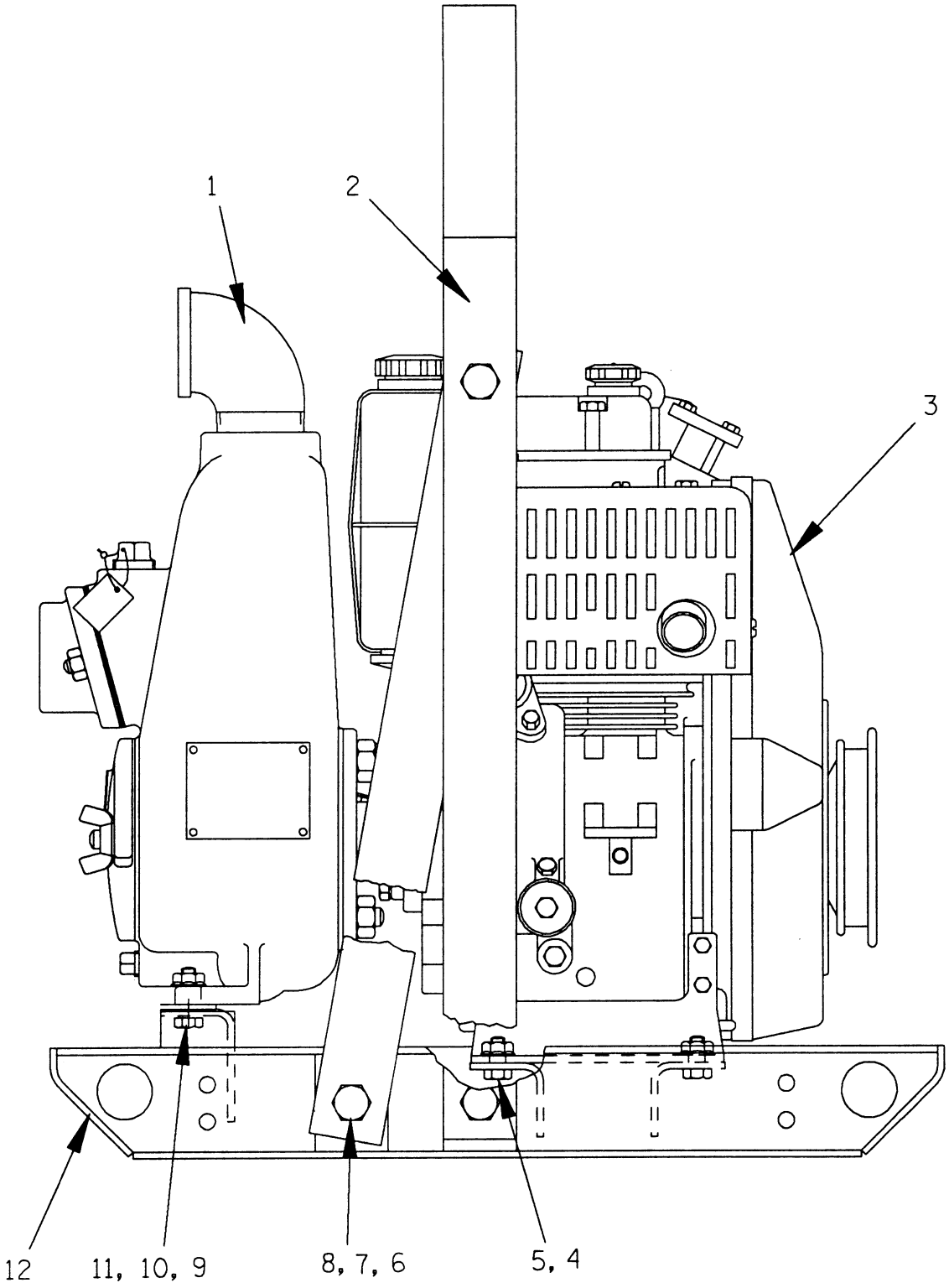

Figure 1. Pump Model 12D-6LD325

PARTS LIST
Pump Model 12D-6LD325
(From S/N 1015832 up)

If your pump serial number is followed by an "N", your pump is **NOT** a standard production model. Contact the Gorman-Rupp Company to verify part numbers.

ITEM NO.	PART NAME	PART NUMBER	MAT'L CODE	QTY
1	PUMP END ASSY	12D-(6LD325)	-----	1
2	HOISTING BAIL ASSY	44714-043	-----	1
3	LOMBARDINI 6LD325 ENGINE	29226-003	-----	1
4	HEX HD CAPSCREW	B0604	15991	4
5	FLANGED HEX NUT	21765-314	-----	4
6	HEX HD CAPSCREW	B1006	15991	6
7	LOCKWASHER	J10	15991	6
8	HEX NUT	D10	15991	6
9	HEX HD CAPSCREW	B0606	15991	2
10	FLAT WASHER	K06	15991	2
11	FLANGED HEX NUT	21765-314	-----	2
12	COMBINATION BASE	41566-092	24150	1
OPTIONAL:				
	WHEEL KIT	GRP30-03C	-----	1

Above Serial Numbers Do Not Apply To Pumps Made In Canada.

CANADIAN SERIAL NO. ..... AND UP

SECTION DRAWING

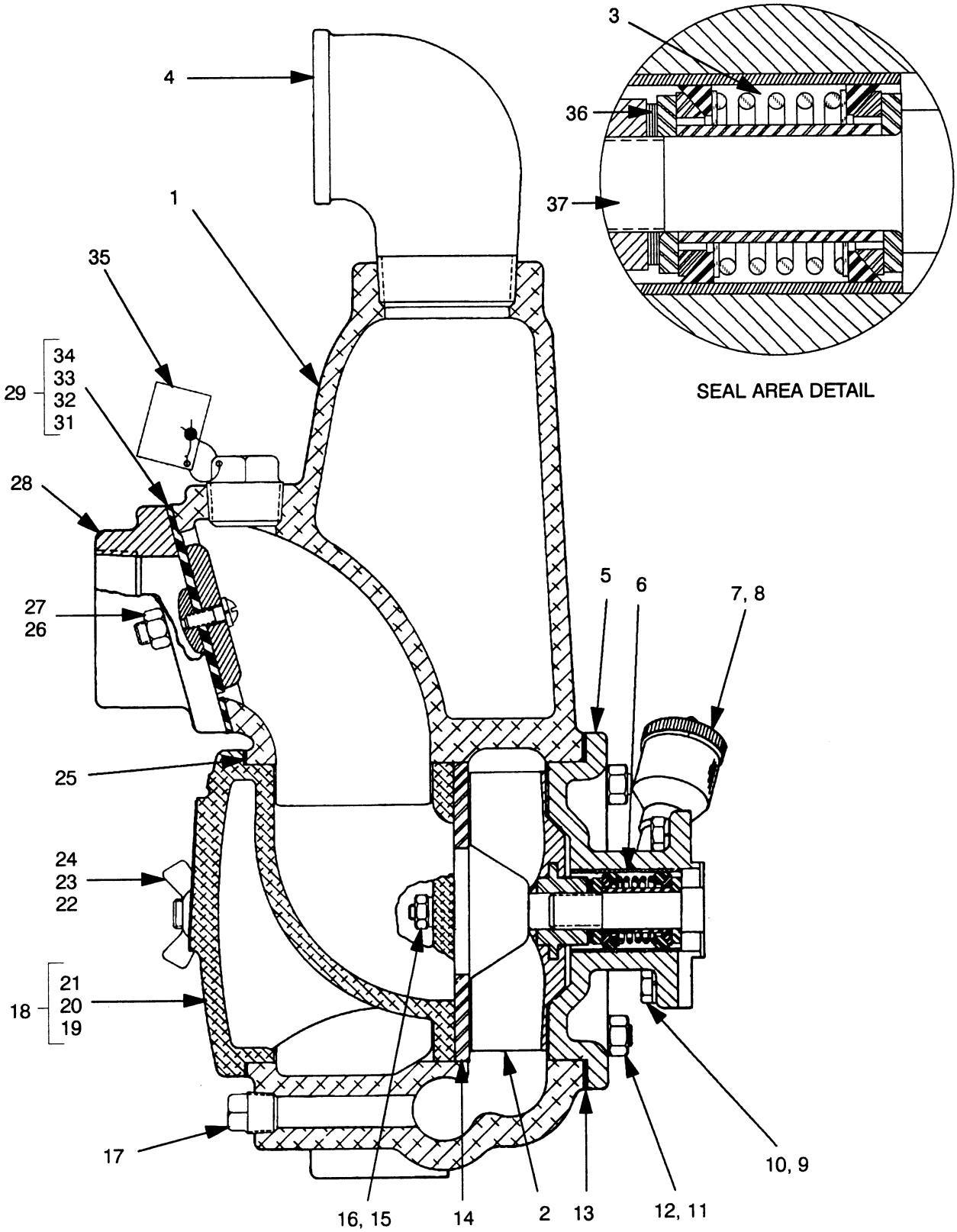

Figure 2. Pump End Assembly 12D-(6LD325)

PARTS LIST
Pump End Assembly 12D-(6LD260)

ITEM NO.		PART NAME	PART NUMBER	MAT'L CODE	QTY
1		PUMP CASING	38224-205	13040	1
2	*	IMPELLER	38615-066	11060	1
3	*	SEAL ASSY	GS625	-----	1
4		STREET ELBOW	RS32	11999	1
5		INTERMEDIATE	2935	10010	1
6	*	SEAL LINER	1904	14080	REF
7		PIPE ELBOW	AGS04	11999	1
8	*	GREASE CUP	S36	-----	1
9		HEX HD CAPSCREW	B0503 1/2S	15991	4
10		LOCKWASHER	J05	15991	4
11		STUD	C0605 1/2	15991	4
12		HEX NUT	D06	15991	4
13	*	CASING GASKET SET	504G	18000	1
14	*	WEAR PLATE	46451-018	24150	1
15		LOCKWASHER	J04	15991	2
16		HEX NUT	D04	15991	2
17		CASING DRAIN PLUG	P06	15079	1
18		BACK CVR PLATE ASSY	42111-919	-----	1
19		-WARNING PLATE	2613EV	13990	1
20		-COVER PLATE	NOT AVAILABLE		1
21		-DRIVE SCREW	BM#04-03	15990	4
22		STUD	C0808	15991	2
23		FLAT WASHER	KE08	15991	2
24		WING NUT	BB08	15991	2
25	*	COVER PLATE GSKT	12369G	20000	1
26		STUD	C0606	15991	2
27		HEX NUT	D06	15991	2
28		SUCTION FLANGE	38645-024	13040	1
29		CHECK VALVE ASSY	46413-028	-----	1
30		-VALVE WEIGHT	19B	10010	1
31		-VALVE WEIGHT	1354	10010	1
32		-LOCKWASHER	J04	17090	1
33		-RD HD MACH SCREW	X0403	17090	1
34	*	-CHECK VALVE	38671-630	19070	1
35		FILL PLUG ASSY	48271-063	-----	1
36	*	IMP ADJ SHIM SET	513A	17090	REF
37		ENGINE CRANKSHAFT	(W/ENGINE)		REF
NOT SHOWN:					
		DRIVE SCREW	BM#04-03	15990	4
		NAME PLATE	38818-021	13990	1
		STRAINER	9026D	24001	1
		WARNING DECAL	2613FE	-----	1
		SUCTION STICKER	6588AG	-----	1
		DISCHARGE STICKER	6588BJ	-----	1
		PRIMING STICKER	6588AH	-----	1
OPTIONAL:					
		URETHANE IMPELLER	38615-071	23130	1

* INDICATES PARTS RECOMMENDED FOR STOCK

PUMP AND SEAL DISASSEMBLY AND REASSEMBLY

Review all SAFETY information in Section A.

Follow the instructions on all tags, labels and decals attached to the pump.

This pump requires little service due to its rugged, minimum-maintenance design. However, if it becomes necessary to inspect or replace the wearing parts, follow these instructions which are keyed to the sectional views (see Figures 1 and 2) and the accompanying parts lists.

Before attempting to service the pump, remove the spark plug wire to ensure that it will remain inoperative. Close all valves in the suction and discharge lines.

For engine disassembly and repair, consult the literature supplied with the engine, or contact your local Lombardini engine representative.

WARNING!

Before attempting to open or service the pump:

1. **Familiarize yourself with this manual.**
2. **Shut down the engine and take precautions to ensure that the pump will remain inoperative.**
3. **Allow the pump to completely cool if overheated.**
4. **Check the temperature before opening any covers, plates, or plugs.**
5. **Close the suction and discharge valves.**
6. **Vent the pump slowly and cautiously.**
7. **Drain the pump.**

Suction Check Valve Disassembly

(Figure 2)

Before attempting to service the pump, remove the pump casing drain plug (17) and drain the pump. Clean and reinstall the drain plug.

To service the suction check valve, remove the suction piping. Remove the hex nuts (27) securing the suction flange (28) to the pump casing (1). Pull the check valve assembly (29) from the suction port.

Inspect the check valve assembly for wear or damage. Remove the hardware (32 and 33) securing the check valve weights (30 and 31) to the check valve (34). Replace parts as required.

If no further disassembly is required, see **Suction Check Valve Installation**.

Back Cover Removal

(Figure 2)

The wear plate (14) can be serviced after the back cover assembly (18) has been removed.

Remove the wing nuts and washers (23 and 24) securing the back cover to the casing. Pull the back cover and assembled wear plate from the pump casing. Inspect the wear plate for excessive wear or scoring. If replacement is required, remove the hardware (15 and 16) securing it to the back cover.

Remove the cover plate gasket (25) and clean the mating surfaces.

Pump Casing Removal

(Figure 1)

To service the impeller or seal assembly, disconnect the discharge piping. Remove the hardware (9, 10 and 11) securing the pump casing to the base (12).

(Figure 2)

Support the pump casing using a suitable hoist and sling. Remove the nuts (12), and separate the pump casing from the intermediate (5) by pulling the casing straight away. For ease of reassembly, tie and tag any leveling shims used under the casing mounting feet.

Remove the casing gaskets (13). Clean the mating surfaces of the intermediate and pump casing.

Impeller Removal

(Figure 2)

Before removing the impeller (2), turn the cross arm on the automatic grease cup (8) clockwise until it rest against the cover (see Figure 4). This will prevent the grease from escaping when the impeller is removed.

To loosen the impeller (2), tap the vanes of the impeller in a counterclockwise direction (when facing the impeller) with a block of wood or a soft-faced mallet. **Be careful** not to damage the vane. Unscrew the impeller and replace it if cracked or badly worn. Use caution when removing the impeller; tension on the seal spring will be released as the impeller is unscrewed.

Slide the impeller adjusting shims (36) off the impeller shaft. Tie and tag the shims or measure and record their thickness for ease of reassembly.

NOTE

If your pump is equipped with a urethane impeller, an impeller wrench can be made as shown below to prevent possible damage when removing the impeller.

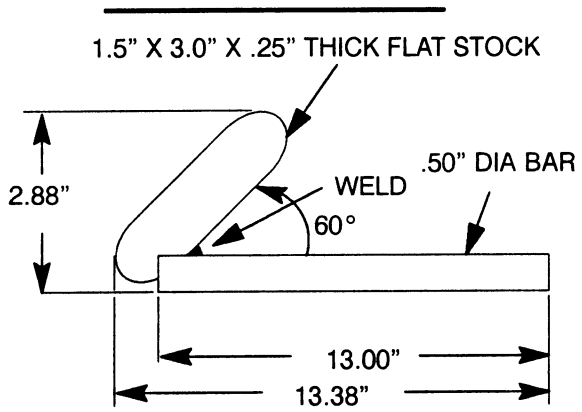

Figure 3. Impeller Wrench

Seal Removal and Disassembly

(Figure 2 and 4)

Carefully remove the outer stationary and rotating seal elements, packing ring, stationary washer, seal spring, and spacer sleeve from the intermediate. Using a stiff wire with a hooked end, remove the inboard stationary washer, packing ring and stationary and rotating seal elements.

Inspect the seal liner (6) for wear or grooves which could cause leakage or damage to the seal packing rings. The seal liner is a press fit in the intermediate (5) and does not normally require replacement. If replacement is necessary, disengage the hardware (9 and 10) and separate the intermediate from the engine. Remove the grease cup and piping (7 and 8) from the intermediate.

If no further disassembly is required, see **Seal Reassembly and Installation**.

Seal Reassembly and Installation

(Figures 2 and 4)

Before installing the seal inspect the bore of the seal liner (6) for wear or grooves which might cause leakage or damage to the seal packing rings. If the seal liner must be replaced, remove the intermediate as described in **Seal Removal And Disassembly**, and position it on the bed of an arbor (or hydraulic) press. Use a new sleeve to force the old one out. After the new liner is properly installed, a 1/4-inch diameter hole must be drilled through it to permit the flow of lubricant to the seal assembly. **Be careful** to center the drill in the threaded grease piping hole and not damage the threads. Deburr the hole from the inside of the seal liner after drilling.

Inspect the engine crankshaft (37) for damage. Small scratches or nicks may be removed with a fine file or emery cloth. If excessive wear exists, the shaft will have to be replaced in the engine (refer to the engine service manual).

Position the intermediate against the engine and secure it in place using the attaching hardware (9 and 10).

Clean the seal cavity and shaft with a cloth soaked in fresh cleaning solvent.

WARNING!

Most cleaning solvents are toxic and flammable. Use them only in a well-ventilated area free from excessive heat, sparks, and flame. Read and follow all precautions printed on solvent containers.

The seal is not normally reused because wear patterns on the finished faces cannot be realigned dur-

ing reassembly. This could result in premature failure. If necessary to reuse an old seal in an emergency, **carefully** wash all metallic parts in **fresh** cleaning solvent and allow to dry thoroughly.

Handle the seal parts with extreme care to prevent damage. Be careful not to contaminate precision finished faces; even fingerprints on the faces can shorten seal life. If necessary, clean the faces with a non-oil based solvent and a clean, lint-free tissue. Wipe **lightly** in a concentric pattern to avoid scratching the faces.

Inspect the seal components for wear, scoring, grooves, and other damage that might cause leakage. Clean and polish the seal spacer sleeve, or replace it if there are nicks or cuts on either end. If any components are worn, replace the complete seal; **never mix old and new seal parts**.

If a replacement seal is being used, remove it from the container and inspect the precision finished faces to ensure that they are free of any foreign matter.

To ease installation of the seal, lubricate the packing rings and seal liner with water or a very **small** amount of oil, and apply a drop of light lubricating oil on the finished faces. Assemble the seal as follows, (see Figure 4).

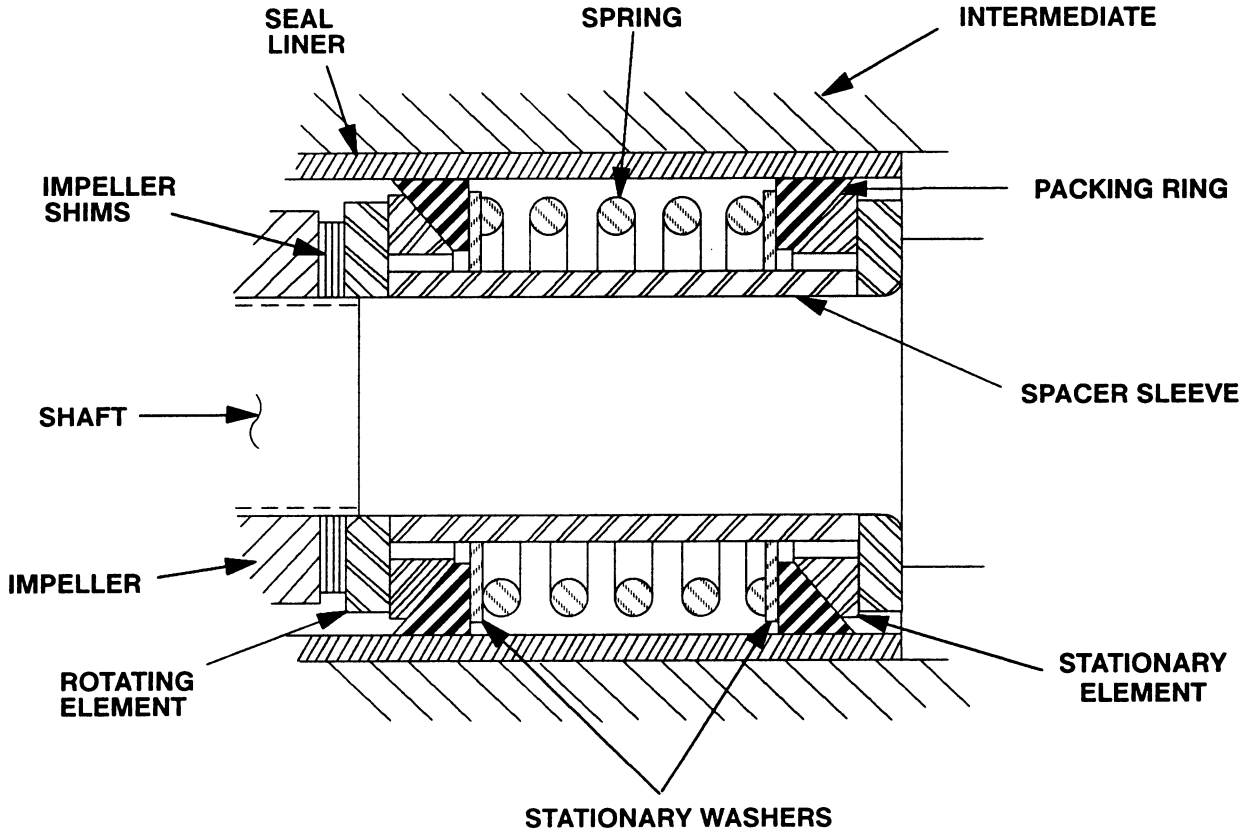

Figure 4. GS625 Seal Assembly

CAUTION

This seal is not designed for operation at temperatures above 110°F (43°C). Do not use at higher operating temperatures.

Position the inboard rotating element on the shaft with the chamfered side toward the shaft shoulder and slide it on until fully seated. A push tube cut from a length of plastic pipe would aid this installation. The I.D. of the tube should be approximately the same as the the I.D. of the seal spring.

Subassemble the inboard stationary seat, packing ring and seal washer. Press this unit into the lubricated seal liner.

Install the spacer sleeve and seal spring.

Subassemble the outboard stationary seat, packing ring and seal washer. Press this unit into the lubricated seal liner.

Install the outboard rotating element with the chamfered side toward the impeller end of the shaft.

Install the grease cup and the hardware (7 and 8) on the intermediate.

After the impeller has been installed, lubricate the seal as indicated in **LUBRICATION**, Section E.

Impeller Installation And Adjustment

(Figure 2)

Inspect the impeller, and replace it if cracked or badly worn. Install the same thickness of impeller shims (36) as previously removed and screw the impeller onto the shaft until tight.

A clearance of .015 to .030 inch (0,38 to 0.76 mm) between the impeller and the intermediate is necessary for maximum pump efficiency. Measure this clearance and add or remove impeller shims until this clearance is reached.

Pump Casing Installation

(Figure 2)

Install the same thickness of pump casing gaskets (13) as previously removed and secure the pump casing to the intermediate (5) with the nuts (12). **Do not** fully tighten the nuts at this time.

A clearance of .010 to .020 inch (0,25 to 0,51 mm) between the impeller and the wear plate is also recommended for maximum pump efficiency. This clearance must be set after installing the back cover by adding or removing pump casing gaskets until the impeller scrapes against the wear plate when the shaft is turned. After the impeller scrapes, add approximately .010 inch (0,25 mm) of gaskets.

After the face clearance has been set, tighten the nuts (12) securing the pump casing to the intermediate.

See Figure 1 and secure the pump casing to the base (12) with the hardware (9, 10 and 11). Be sure to reinstall any leveling shims used under the mounting feet of the pump casing.

Back Cover Installation

(Figure 2)

Inspect the wear plate (14) and replace it if badly worn or grooved. Carefully center the wear plate on the back cover and secure it with the hardware (15 and 16). The wear plate must be concentric to prevent binding when the back cover is installed.

Clean any scale or debris from the back cover shoulder and pump casing which might prevent a good seal.

NOTE

Apply a film of 'Never-Seez' or equivalent compound on the back cover shoulder or any surface which contacts the pump casing to ease future disassembly and to reduce rust and scale build up.

Replace the back cover gasket (25) and slide the back cover assembly (18) into the pump casing. Be sure the wear plate does not bind against the pump casing.

Secure the back cover assembly by tightening the wing nuts (24) evenly. **Do not** over tighten the wing nuts; they should be just tight enough to ensure a good seal at the back cover shoulder.

Suction Check Valve Installation

(Figure 2)

Inspect the check valve components and replace as required. Assemble the check valve weights (30 and 31) to each side of the check valve (34) and secure with the hardware (32 and 33).

Position the check valve assembly (29) in the suction port with the large weight toward the impeller and the small weight toward the suction flange. Install the suction flange (28) and secure it with the nuts (27). Check the operation of the check valve to ensure proper seating and free movement.

Final Pump Assembly

(Figure 1)

Be sure the pump and engine are securely mounted to the base.

Install the suction and discharge lines and open all valves. Make certain that all piping connections are tight, properly supported and secure.

Be sure the pump and engine have been properly lubricated, see **LUBRICATION**.

Fill the pump casing with clean liquid. Reinstall the fill plug (35) and tighten.

Refer to **OPERATION**, Section C, before putting the pump back into service.

LUBRICATION

Seal Assembly

(Figure 2)

Fill the grease cup (8) through the grease fitting with No. 2 lithium base grease until grease escapes from the relief hole. Turn the grease cup arm counter-clockwise until it is at the top of the stem; this will release the spring to apply grease to the seal (see Figure 5).

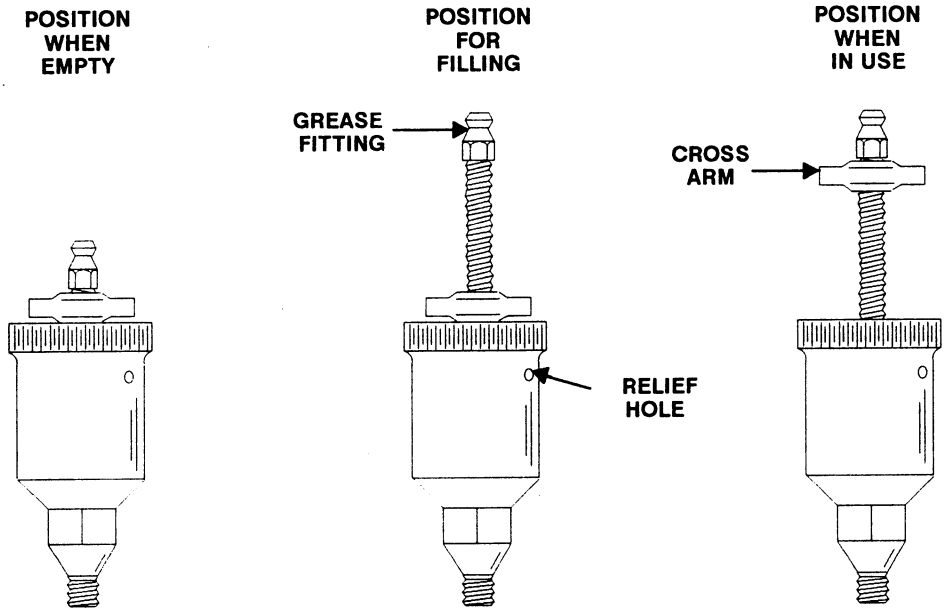

Figure 5. Automatic Lubricating Grease Cup

Engine

Consult the literature supplied with the engine, or contact your local Lombardini engine representative.

For U.S. and International Warranty Information,
Please Visit www.grpumps.com/warranty
or call:
U.S.: 419—755—1280
International: +1—419—755—1352

For Canadian Warranty Information,
Please Visit www.grcanada.com/warranty
or call:
519—631—2870

THE GORMAN-RUPP COMPANY ● MANSFIELD, OHIO
GORMAN-RUPP OF CANADA LIMITED ● ST. THOMAS, ONTARIO, CANADA