INSTALLATION, OPERATION, AND MAINTENANCE MANUAL

WITH PARTS LIST

GORMAN-RUPP

PUMPS

60 SERIES PUMPS

MODEL
64B52-F5L

THE GORMAN-RUPP COMPANY • MANSFIELD, OHIO

GORMAN-RUPP OF CANADA LIMITED • ST. THOMAS, ONTARIO, CANADA Printed in U.S.A.

©Copyright by the Gorman-Rupp Company

WARNING!

The engine exhaust from this product contains chemicals known to the State of California to cause cancer, birth defects or other reproductive harm.

TABLE OF CONTENTS

INTRODUCTION ..... **PAGE I – 1**

WARNINGS - SECTION A ..... **PAGE A – 1**

INSTALLATION – SECTION B ..... **PAGE B – 1**

- Pump Dimensions ..... PAGE B – 1
- PREINSTALLATION INSPECTION ..... PAGE B – 1
  - Battery Specifications And Installation ..... PAGE B – 2
- POSITIONING PUMP ..... PAGE B – 2
  - Lifting ..... PAGE B – 2
  - Mounting ..... PAGE B – 3
- SUCTION AND DISCHARGE PIPING ..... PAGE B – 3
  - Materials ..... PAGE B – 3
  - Line Configuration ..... PAGE B – 3
  - Connections to Pump ..... PAGE B – 3
  - Gauges ..... PAGE B – 3
- SUCTION LINES ..... PAGE B – 3
  - Fittings ..... PAGE B – 3
  - Strainers ..... PAGE B – 3
  - Sealing ..... PAGE B – 4
  - Suction Lines In Sumps ..... PAGE B – 4
  - Suction Line Positioning ..... PAGE B – 4
- DISCHARGE LINES ..... PAGE B – 5
  - Siphoning ..... PAGE B – 5
  - Valves ..... PAGE B – 5
- ALIGNMENT ..... PAGE B – 5

OPERATION – SECTION C ..... **PAGE C – 1**

- PRIMING ..... PAGE C – 1
  - Hand-Operated Priming Pump ..... PAGE C – 1
- STARTING ..... PAGE C – 1
- OPERATION ..... PAGE C – 1
  - Leakage ..... PAGE C – 2
  - Liquid Temperature And Overheating ..... PAGE C – 2
  - Strainer Check ..... PAGE C – 2
  - Pump Vacuum Check ..... PAGE C – 2
- STOPPING ..... PAGE C – 2
  - Cold Weather Preservation ..... PAGE C – 2
- BEARING TEMPERATURE CHECK ..... PAGE C – 3

TROUBLESHOOTING – SECTION D ..... **PAGE D – 1**

PUMP MAINTENANCE AND REPAIR - SECTION E ..... **PAGE E – 1**

- STANDARD PERFORMANCE CURVE ..... PAGE E – 1
- PARTS LISTS:
  - Pump Model ..... PAGE E – 3

TABLE OF CONTENTS
(continued)

Pump End Assy ..... PAGE E – 5
PUMP AND SEAL DISASSEMBLY AND REASSEMBLY ..... PAGE E – 6
Suction Head Removal ..... PAGE E – 6
Separating Pump And Intermediate From The Engine ..... PAGE E – 7
Impeller Removal ..... PAGE E – 7
Seal Removal and Disassembly ..... PAGE E – 7
Shaft And Bearing Removal And Disassembly ..... PAGE E – 7
Shaft and Bearing Reassembly and Installation ..... PAGE E – 8
Securing Pump And Intermediate To Engine ..... PAGE E – 10
Seal Reassembly and Installation ..... PAGE E – 10
Impeller Installation ..... PAGE E – 12
Suction Head Installation ..... PAGE E – 12
Final Pump Assembly ..... PAGE E – 12
LUBRICATION ..... PAGE E – 13
Seal Assembly ..... PAGE E – 13
Bearings ..... PAGE E – 13
Engine ..... PAGE E – 13

INTRODUCTION

This Installation, Operation, and Maintenance manual is designed to help you achieve the best performance and longest life from your Gorman-Rupp pump.

This pump is a 60 Series, centrifugal model with a closed impeller. The pump is designed for high pressure distribution of clean liquids containing specified entrained solids. It is powered by a five cylinder Deutz diesel engine, model F5L–912D. The basic material of construction for wetted parts is gray iron, with a gray iron impeller and brass wearing parts. Be sure the liquid being pumped is compatible with these materials.

If there are any questions regarding the pump or its application which are not covered in this manual or in other literature accompanying this unit, please contact your Gorman-Rupp distributor, or write:

The Gorman-Rupp Company
P.O. Box 1217
Mansfield, Ohio 44901–1217
or
Gorman-Rupp of Canada Limited
70 Burwell Road
St. Thomas, Ontario N5P 3R7

For information or technical assistance on the engine, contact the engine manufacturer's local dealer or representative.

Because pump installations are seldom identical, this manual cannot possibly provide detailed instructions and precautions for every aspect of each specific application. Therefore, it is the responsibility of the owner/installer of the pump to ensure that applications not addressed in this manual are performed **only** after establishing that neither operator safety nor pump integrity are compromised by the installation. Pumps and related equipment **must** be installed and operated according to all national, local and industry standards.

The following are used to alert maintenance personnel to procedures which require special attention, to those which could damage equipment, and to those which could be dangerous to personnel:

DANGER!

Immediate hazards which WILL result in severe personal injury or death. These instructions describe the procedure required and the injury which will result from failure to follow the procedure.

WARNING!

Hazards or unsafe practices which COULD result in severe personal injury or death. These instructions describe the procedure required and the injury which could result from failure to follow the procedure.

CAUTION

Hazards or unsafe practices which COULD result in minor personal injury or product or property damage. These instructions describe the requirements and the possible damage which could result from failure to follow the procedure.

NOTE

Instructions to aid in installation, operation,and maintenance, or which clarify a procedure.

SAFETY - SECTION A

These warnings apply to 60 series engine driven pumps. Refer to the manual accompanying the engine before attempting to begin operation.

Because pump installations are seldom identical, this manual cannot possibly provide detailed instructions and precautions for each specific application. Therefore, it is the owner/installer's responsibility to ensure that applications not addressed in this manual are performed only after establishing that neither operator safety nor pump integrity are compromised by the installation.

WARNING!

Before attempting to open or service the pump:

1. Familiarize yourself with this manual.
2. Switch off the engine ignition and disconnect the positive battery cable to ensure that the pump will remain inoperative.
3. Allow the pump to completely cool if overheated.
4. Check the temperature before opening any covers, plates, or plugs.
5. Close the suction and discharge valves.
6. Vent the pump slowly and cautiously.
7. Drain the pump.

WARNING!

This pump is designed to handle clean liquids containing specified entrained solids. Do not attempt to pump volatile, corrosive, or flammable liquids which may damage the pump or endanger personnel as a result of pump failure.

WARNING!

Use lifting and moving equipment in good repair and with adequate capacity to prevent injuries to personnel or damage to equipment. The bail is intended for use in lifting the pump assembly only. Suction and discharge hoses and piping must be removed from the pump before lifting.

WARNING!

After the pump has been installed, make certain that the pump and all piping or hose connections are tight, properly supported and secure before operation.

WARNING!

Do not operate the pump against a closed discharge valve for long periods of time. If operated against a closed discharge valve, pump components will deteriorate, and the liquid could come to a boil, build pressure, and cause the pump casing to rupture or explode.

WARNING!

Overheated pumps can cause severe burns and injuries. If overheating of the pump occurs:

1. Stop the pump immediately.
2. Ventilate the area.
3. Allow the pump to completely cool.
4. Check the temperature before opening any covers, plates, gauges, or plugs.

5. Vent the pump slowly and cautiously.
6. Refer to instructions in this manual before restarting the pump.

WARNING!

Do not remove plates, covers, gauges, pipe plugs, or fittings from an overheated pump. Vapor pressure within the pump can cause parts being disengaged to be ejected with great force. Allow the pump to cool before servicing.

WARNING!

Do not operate an internal combustion engine in an explosive atmosphere. When operating internal combustion engines in an enclosed area, make certain that exhaust fumes are piped to the outside. These fumes contain carbon monoxide, a deadly gas that is colorless, tasteless, and odorless.

WARNING!

Fuel used by internal combustion engines presents an extreme explosion and fire hazard. Make certain that all fuel lines are securely connected and free of leaks. Never refuel a hot or running engine. Avoid overfilling the fuel tank. Always use the correct type of fuel.

WARNING!

Never tamper with the governor to gain more power. The governor establishes safe operating limits that should not be exceeded. The maximum continuous operating speed for this pump is 2400 RPM.

INSTALLATION – SECTION B

Review all SAFETY information in Section A.

Since pump installations are seldom identical, this section offers only general recommendations and practices required to inspect, position, and arrange the pump and piping.

Most of the information pertains to a standard **static lift** application where the pump is positioned above the free level of liquid to be pumped.

If installed in a **flooded suction application** where the liquid is supplied to the pump under pressure, some of the information such as mounting, line configuration, and priming must be tailored to the specific application. Since the pressure supplied to the pump is critical to performance and safety, **be sure** to limit the incoming pressure to 50% of the maximum permissible operating pressure as shown on the pump performance curve (see Section E, Page 1).

For further assistance, contact your Gorman-Rupp distributor or the Gorman-Rupp Company.

Pump Dimensions

See Figure 1 for the approximate physical dimensions of this pump.

OUTLINE DRAWING

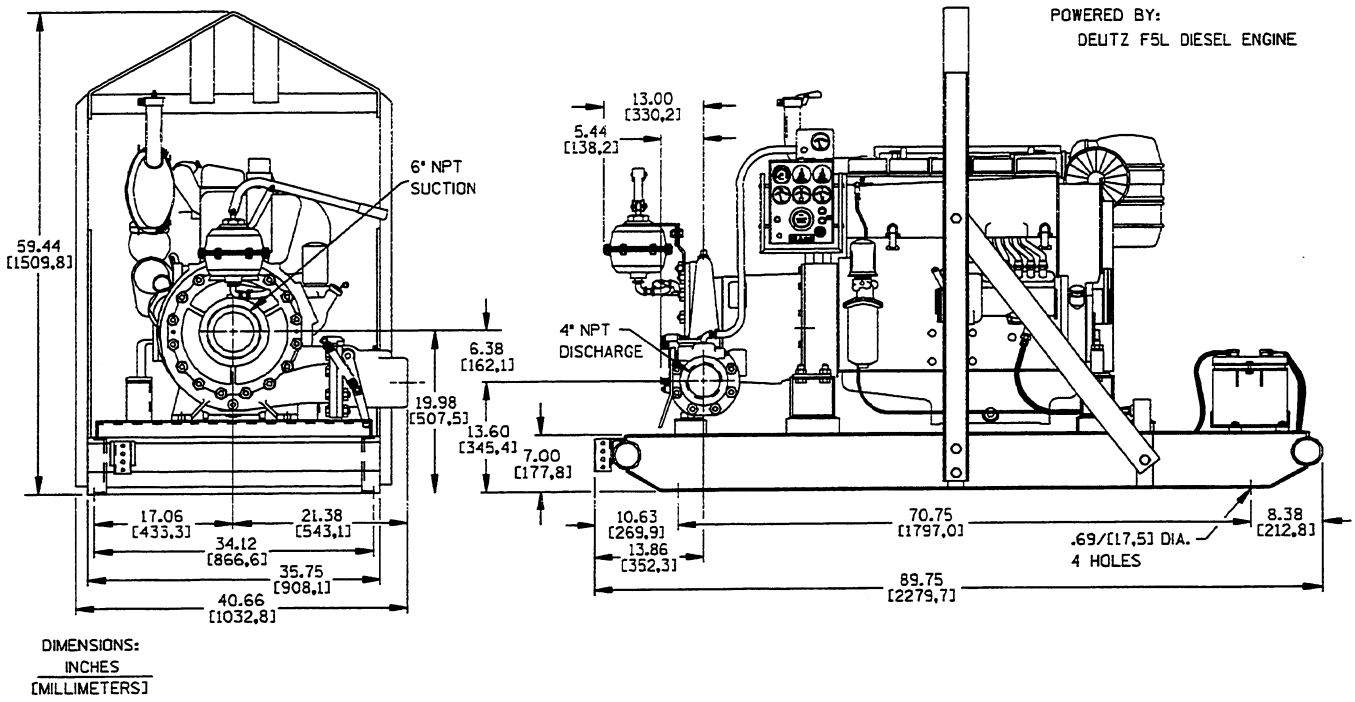

Figure 1. Pump Model 64B52–F5L

PREINSTALLATION INSPECTION

The pump assembly was inspected and tested before shipment from the factory. Before installation, inspect the pump for damage which may have occurred during shipment. Check as follows:

a. Inspect the pump and engine for cracks, dents, damaged threads, and other obvious damage.

b. Check for and tighten loose attaching hardware. Since gaskets tend to shrink after dry-

ing, check for loose hardware at mating surfaces.

c. Carefully read all tags, decals, and markings on the pump assembly, and perform all duties indicated.

d. Check levels and lubricate as necessary. Refer to **LUBRICATION** in the **MAINTENANCE AND REPAIR** section of this manual and perform duties as instructed.

e. If the pump and engine have been stored for more than 12 months, some of the components or lubricants may have exceeded their maximum shelf life. These **must be inspected or replaced** to ensure maximum pump service.

If the maximum shelf life has been exceeded, or if anything appears to be abnormal, contact your Gorman-Rupp distributor or the factory to determine the repair or updating policy. **Do not** put the pump into service until appropriate action has been taken.

Battery Specifications And Installation

Unless otherwise specified on the pump order, the engine battery was **not** included with the unit. Refer to the following specifications when selecting a battery.

Table 1. Battery Specifications

Voltage	Cold Crank Amps @ 0°F	Reserve Capacity @80°F (Minutes)	Amp/ Hr. Rating	Approx. Overall Dims. (Inches)
12 Volts	960-975	365	175	20.5L x 8.75W x 9.75H

Refer to the information accompanying the battery and/or electrolyte solution for activation and charging instructions.

Before installing the battery, clean the positive and negative cable connectors, and the battery terminals. Secure the battery by tightening the holddown brackets. The terminals and clamps may be coated with petroleum jelly to retard corrosion. Connect and tighten the positive cable first, then the negative cable.

POSITIONING PUMP

WARNING!

Use lifting and moving equipment in good repair and with adequate capacity to prevent injuries to personnel or damage to equipment. The bail is intended for use in lifting the pump assembly only. Suction and discharge hoses and piping must be removed from the pump before lifting.

Lifting

Use lifting equipment with a capacity of at least **10,400 pounds (4717 kg)**. This pump weighs approximately **2,066 pounds (937 kg)**, not including the weight of accessories and optional wheel kit. Customer installed equipment such as suction and discharge piping **must** be removed before attempting to lift.

CAUTION

The pump assembly can be seriously damaged if the cables or chains used to lift and move the unit are improperly wrapped around the pump.

Mounting

Locate the pump in an accessible place as close as practical to the liquid being pumped. Level mounting is essential for proper operation.

The pump may have to be supported or shimmed to provide for level operation or to eliminate vibration.

If the pump has been mounted on a moveable base, make certain the base is stationary by setting the brake and blocking the wheels before attempting to operate the pump.

To ensure sufficient lubrication and fuel supply to the engine, **do not** position the pump and engine more than 15° off horizontal for continuous operation. The pump and engine may be positioned up to 30° off horizontal for **intermittent operation only**; however, the engine manufacturer should be consulted for continuous operation at angles greater than 15°.

SUCTION AND DISCHARGE PIPING

Materials

Either pipe or hose maybe used for suction and discharge lines; however, the materials must be compatible with the liquid being pumped. If hose is used in suction lines, it must be the rigid-wall, reinforced type to prevent collapse under suction. Using piping couplings in suction lines is not recommended.

Line Configuration

Keep suction and discharge lines as straight as possible to minimize friction losses. Make minimum use of elbows and fittings, which substantially increase friction loss. If elbows are necessary, use the long-radius type to minimize friction loss.

Connections to Pump

Before tightening a connecting flange, align it exactly with the pump port. Never pull a pipe line into place by tightening the flange bolts and/or couplings.

Lines near the pump must be independently supported to avoid strain on the pump which could cause excessive vibration, decreased bearing life, and increased shaft and seal wear. If hose-type lines are used, they should have adequate support to secure them when filled with liquid and under pressure.

Gauges

Most pumps are drilled and tapped for installing discharge pressure and vacuum suction gauges. If these gauges are desired for pumps that are not tapped, drill and tap the suction and discharge lines not less than 18 inches (457 mm) from the suction and discharge ports and install the lines. Installation closer to the pump may result in erratic readings.

SUCTION LINES

To avoid air pockets which could affect pump priming, the suction line must be as short and direct as possible. When operation involves a suction lift, the line must always slope upward to the pump from the source of the liquid being pumped; if the line slopes down to the pump at any point along the suction run, air pockets will be created.

Fittings

Suction lines should be the same size as the pump inlet. If reducers are used in suction lines, they should be the eccentric type, and should be installed with the flat part of the reducers uppermost to avoid creating air pockets. Valves are not normally used in suction lines, but if a valve is used, install it with the stem horizontal to avoid air pockets.

Strainers

If a strainer is furnished with the pump, be certain to use it; any spherical solids which pass through a

strainer furnished with the pump will also pass through the pump itself.

If a strainer is not furnished with the pump, but is installed by the pump user, make certain that the total area of the openings in the strainer is at least three or four times the cross section of the suction line, and that the openings will not permit passage of solids larger than the solids handling capability of the pump.

This pump is designed to handle up to 13/32 inch (10,3 mm) diameter spherical solids.

Sealing

Since even a slight leak will affect priming, head, and capacity, especially when operating with a high suction lift, all connections in the suction line should be sealed with pipe dope to ensure an air-tight seal. Follow the sealant manufacturer's recommendations when selecting and applying the pipe dope. The pipe dope should be compatible with the liquid being pumped.

Suction Lines In Sumps

If a single suction line is installed in a sump, it should be positioned away from the wall of the sump at a distance equal to 1 1/2 times the diameter of the suction line.

If there is a liquid flow from an open pipe into the sump, the flow should be kept away from the suction inlet because the inflow will carry air down into the sump, and air entering the suction line will reduce pump efficiency.

If it is necessary to position inflow close to the suction inlet, install a baffle between the inflow and the suction inlet at a distance 1-1/2 times the diameter of the suction pipe. The baffle will allow entrained air to escape from the liquid before it is drawn into the suction inlet.

If two suction lines are installed in a single sump, the flow paths may interact, reducing the efficiency of one or both pumps. To avoid this, position the suction inlets so that they are separated by a distance equal to at least 3 times the diameter of the suction pipe.

Suction Line Positioning

The depth of submergence of the suction line is critical to efficient pump operation. Figure 2 shows recommended minimum submergence vs. velocity.

NOTE

The pipe submergence required may be reduced by installing a standard pipe increaser fitting at the end of the suction line. The larger opening size will reduce the inlet velocity. Calculate the required submergence using the following formula based on the increased opening size (area or diameter).

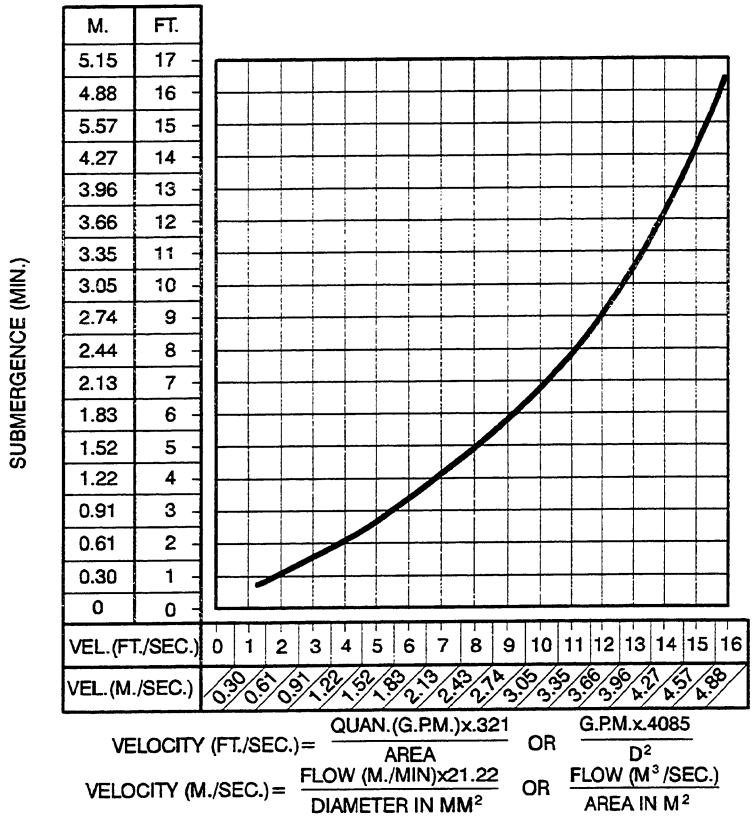

$$\text{VELOCITY (FT./SEC.)} = \frac{\text{QUAN.(G.P.M.)x.321}}{\text{AREA}} \quad \text{OR} \quad \frac{\text{G.P.M.x.4085}}{D^2}$$

$$\text{VELOCITY (M./SEC.)} = \frac{\text{FLOW (M./MIN)x21.22}}{\text{DIAMETER IN MM}^2} \quad \text{OR} \quad \frac{\text{FLOW (M}^3\text{/SEC.)}}{\text{AREA IN M}^2}$$

Figure 2. Recommended Minimum Suction Line Submergence vs. Velocity

DISCHARGE LINES

Siphoning

Do not terminate the discharge line at a level lower than that of the liquid being pumped unless a siphon breaker is used in the line. Otherwise, a siphoning action causing damage to the pump could result.

Valves

The spring-loaded check valve provided with this pump will **not** function as a discharge check valve in system piping. It is intended to prevent recirculation of air during the priming cycle.

If a throttling valve is desired in the discharge line, use a valve as large as the largest pipe to minimize friction losses. Never install a throttling valve in a suction line.

With high discharge heads, it is recommended that a throttling valve and a system check valve be installed in the discharge line to protect the pump from excessive shock pressure and reverse rotation when it is stopped.

CAUTION

If the application involves a high discharge head, gradually close the discharge throttling valve before stopping the pump.

ALIGNMENT

The alignment of the pump and the engine is critical for trouble-free mechanical operation. See Section E, **Securing Pump And Intermediate To Engine** for detailed information.

OPERATION – SECTION C

Review all SAFETY information in Section A.

Follow the instructions on all tags, labels and decals attached to the pump.

WARNING!

This pump is designed to handle clean liquids containing specified entrained solids. Do not attempt to pump volatile, corrosive, or flammable liquids which may damage the pump or endanger personnel as a result of pump failure.

WARNING!

Never tamper with the governor to gain more power. The governor establishes safe operating limits that should not be exceeded. The maximum continuous operating speed for this pump is 2400 RPM.

PRIMING

Install the pump and piping as described in **INSTALLATION**. Make sure that the piping connections are tight, and that the pump is securely mounted. Check that the pump is properly lubricated (see **LUBRICATION** in **MAINTENANCE AND REPAIR**).

Since this pump is not self-priming, it is equipped with a hand-operated vacuum priming pump and a spring-loaded check valve.

Hand-Operated Priming Pump

The hand-operated priming pump (see Figure 1) is designed to prime the pump by evacuating air from the pump casing and suction line. It can be used while the pump is either stopped or operating. To prime the pump, close the discharge line throttling valve, and close the spring-loaded check valve before engaging the priming device. To prime the pump, open the drain cock in the bottom of the priming pump, and operate the handle of the pump until liquid flows from the drain cock.

NOTE

For installation and operating instructions on the discharge check valve, see the separate check valve manual accompanying this literature.

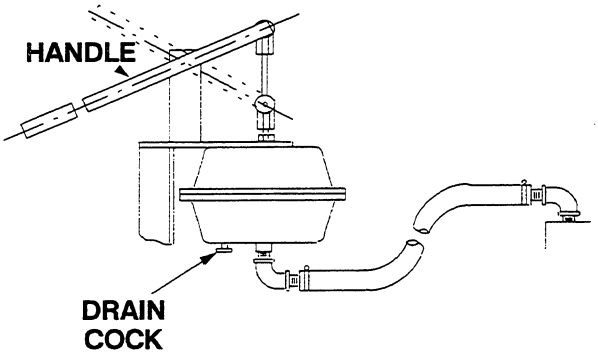

Figure 1. Hand Primer Assembly

Once the pump is fully primed, close the drain cock, and open the discharge line throttling valve.

STARTING

Consult the operations manual furnished with the engine.

NOTE

This pump is equipped with a safety shut down device to terminate engine operation if pump discharge pressure falls below 30 psi. During engine start up, the button on the discharge pressure gauge must be depressed to over-ride this safety feature.

OPERATION

CAUTION

Pump speed and operating condition points must be within the continuous per-

formance range shown on the curve. (See Section E, Page 1.)

Leakage

No leakage should be visible at pump mating surfaces, or at pump connections or fittings. Keep all line connections and fittings tight to maintain maximum pump efficiency.

Liquid Temperature And Overheating

The **maximum** liquid temperature for this pump is 110° F (43°C). Do not apply it at a higher operating temperature.

Overheating can occur if operated with the valves in the suction or discharge lines closed. Operating against closed valves could bring the liquid to a boil, build pressure, and cause the pump to rupture or explode. If overheating occurs, stop the pump and allow it to cool before servicing it. Refill the pump casing with cool liquid.

WARNING!

Do not remove plates, covers, gauges, pipe plugs, or fittings from an overheated pump. Vapor pressure within the pump can cause parts being disengaged to be ejected with great force. Allow the pump to cool before servicing.

Strainer Check

If a suction strainer has been shipped with the pump or installed by the user, check the strainer regularly, and clean it as necessary. The strainer should also be checked if pump flow rate begins to drop. If a vacuum suction gauge has been installed, monitor and record the readings regularly to detect strainer blockage.

Never introduce air or steam pressure into the pump casing or piping to remove a blockage. This could result in personal injury or damage to the equipment. If backflushing is absolutely necessary, **liquid pressure** must be limited to 50% of the maximum permissible operating pressure shown on the pump performance curve (see Section E, Page 1).

Pump Vacuum Check

Since this pump does not have a suction check valve, the discharge line must be fitted with a check valve if a pump vacuum reading is to be taken.

With the pump inoperative, install a vacuum gauge in the system, using pipe dope on the threads. Block the suction line and start the pump. At operating speed the pump should pull a vacuum of 20 inches (508 mm) or more of mercury. If it does not, check for air leaks in the seal, gasket, or discharge valve.

Open the suction line, and read the vacuum gauge with the pump primed and at operation speed. Shut off the pump. The vacuum gauge reading will immediately drop proportionate to static suction lift, and should then stabilize. If the vacuum reading falls off rapidly after stabilization, an air leak exists. Before checking for the source of the leak, check the point of installation of the vacuum gauge.

STOPPING

Never halt the flow of liquid suddenly. If the liquid being pumped is stopped abruptly, damaging shock waves can be transmitted to the pump and piping system. Close all connecting valves slowly.

On engine driven pumps, reduce the throttle speed slowly and allow the engine to idle briefly before stopping.

CAUTION

If the application involves a high discharge head, gradually close the discharge throttling valve before stopping the pump.

After stopping the pump, switch off the engine ignition and disconnect the positive battery cable to ensure that the pump will remain inoperative.

Cold Weather Preservation

In below freezing conditions, drain the pump to prevent damage from freezing. Also, clean out any

solids by flushing with a hose. Operate the pump for approximately one minute; this will remove any remaining liquid that could freeze the pump rotating parts. If the pump will be idle for more than a few hours, or if it has been pumping liquids containing a large amount of solids, drain the pump, and flush it thoroughly with clean water. To prevent large solids from clogging the drain port and preventing the pump from completely draining, insert a rod or stiff wire in the drain port, and agitate the liquid during the draining process. Clean out any remaining solids by flushing with a hose.

BEARING TEMPERATURE CHECK

Bearings normally run at higher than ambient temperatures because of heat generated by friction. Temperatures up to 160°F (71°C) are considered normal for bearings, and they can operate safely to at least 180°F (82°C).

Checking bearing temperatures by hand is inaccurate. Bearing temperatures can be measured accurately by placing a contact-type thermometer against the housing. Record this temperature for future reference.

A sudden increase in bearing temperatures is a warning that the bearings are at the point of failing to operate properly. Make certain that the bearing lubricant is of the proper viscosity and at the correct level (see **LUBRICATION** in Section E). Bearing overheating can also be caused by shaft misalignment and/or excessive vibration.

When pumps are first started, the bearings may seem to run at temperatures above normal. Continued operation should bring the temperatures down to normal levels.

TROUBLESHOOTING – SECTION D

Review all SAFETY information in Section A.

WARNING!

Before attempting to open or service the pump:

1. **Familiarize yourself with this manual.**
2. **Switch off engine ignition and disconnect the positive battery cable to ensure that the pump will remain inoperative.**
3. **Allow the pump to completely cool if overheated.**
4. **Check the temperature before opening any covers, plates, or plugs.**
5. **Close the suction and discharge valves.**
6. **Vent the pump slowly and cautiously.**
7. **Drain the pump.**

Table 1. Trouble Shooting Chart

TROUBLE	POSSIBLE CAUSE	PROBABLE REMEDY
PUMP FAILS TO PRIME	Air leak in suction line.	Correct leak.
	Lining of suction hose collapsed.	Replace suction hose.
	Leaking or worn seal or pump gasket.	Check pump vacuum. Replace leaking or worn seal or gasket.
	Suction lift or discharge head too high.	Check piping installation and install bypass line if needed. See **INSTALLATION**.
	Strainer clogged.	Check strainer and clean if necessary.
	Auxiliary priming device faulty or improperly installed.	Repair priming device or check installation.
PUMP STOPS OR FAILS TO DELIVER RATED FLOW OR PRESSURE	Air leak in suction line.	Correct leak.
	Lining of suction hose collapsed.	Replace suction hose.

Table 1. Trouble Shooting Chart (cont.)

TROUBLE	POSSIBLE CAUSE	PROBABLE REMEDY
PUMP STOPS OR FAILS TO DELIVER RATED FLOW OR PRESSURE (cont.)	Discharge throttling valve partially closed; check valve installed improperly.	Open discharge valve fully; check piping installation.
	Pump speed too high.	Check engine output.
	Strainer clogged.	Check strainer and clean if necessary.
	Discharge pressure at or below safety shutdown limit.	Check starting instructions; increase pressure.
	Impeller or other wearing parts worn or damaged.	Replace worn or damaged parts. Check that impeller is properly centered and rotates freely.
	Impeller clogged.	Free impeller of debris.
	Discharge check valve locked closed.	Check position of handle; open valve.
	Suction lift too high.	Measure lift w/vacuum gauge. Reduce lift and/or friction losses in suction line.
	Pump speed too slow.	Check engine output; consult engine operation manual.
PUMP REQUIRES TOO MUCH POWER	Pump speed too high.	Check engine output.
	Discharge head too low.	Adjust discharge valve.
	Liquid solution too thick.	Dilute if possible.
	Bearing(s) frozen.	Disassemble pump and check bearing(s).
PUMP CLOGS FREQUENTLY	Discharge flow too slow.	Open discharge valve fully to increase flow rate, and run engine at maximum governed speed.
	Suction check valve or foot valve clogged or binding.	Clean valve.
EXCESSIVE NOISE	Cavitation in pump.	Reduce suction lift and/or friction losses in suction line. Record vacuum and pressure gauge readings and consult local representative or factory.
	Pumping entrained air.	Locate and eliminate source of air bubble.
	Pump or drive not securely mounted.	Secure mounting hardware.
	Impeller clogged or damaged.	Clean out debris; replace damaged parts.

Table 1. Trouble Shooting Chart (cont.)

TROUBLE	POSSIBLE CAUSE	PROBABLE REMEDY
BEARINGS RUN TOO HOT	Bearing temperature is high, but within limits.	Check bearing temperature regularly to monitor any increase.
	Low or incorrect lubricant.	Check for proper type and level of lubricant.
	Suction and discharge lines not properly supported.	Check piping installation for proper support.
	Drive misaligned.	Align drive properly.

PUMP MAINTENANCE AND REPAIR - SECTION E

MAINTENANCE AND REPAIR OF THE WEARING PARTS OF THE PUMP WILL MAINTAIN PEAK OPERATING PERFORMANCE.

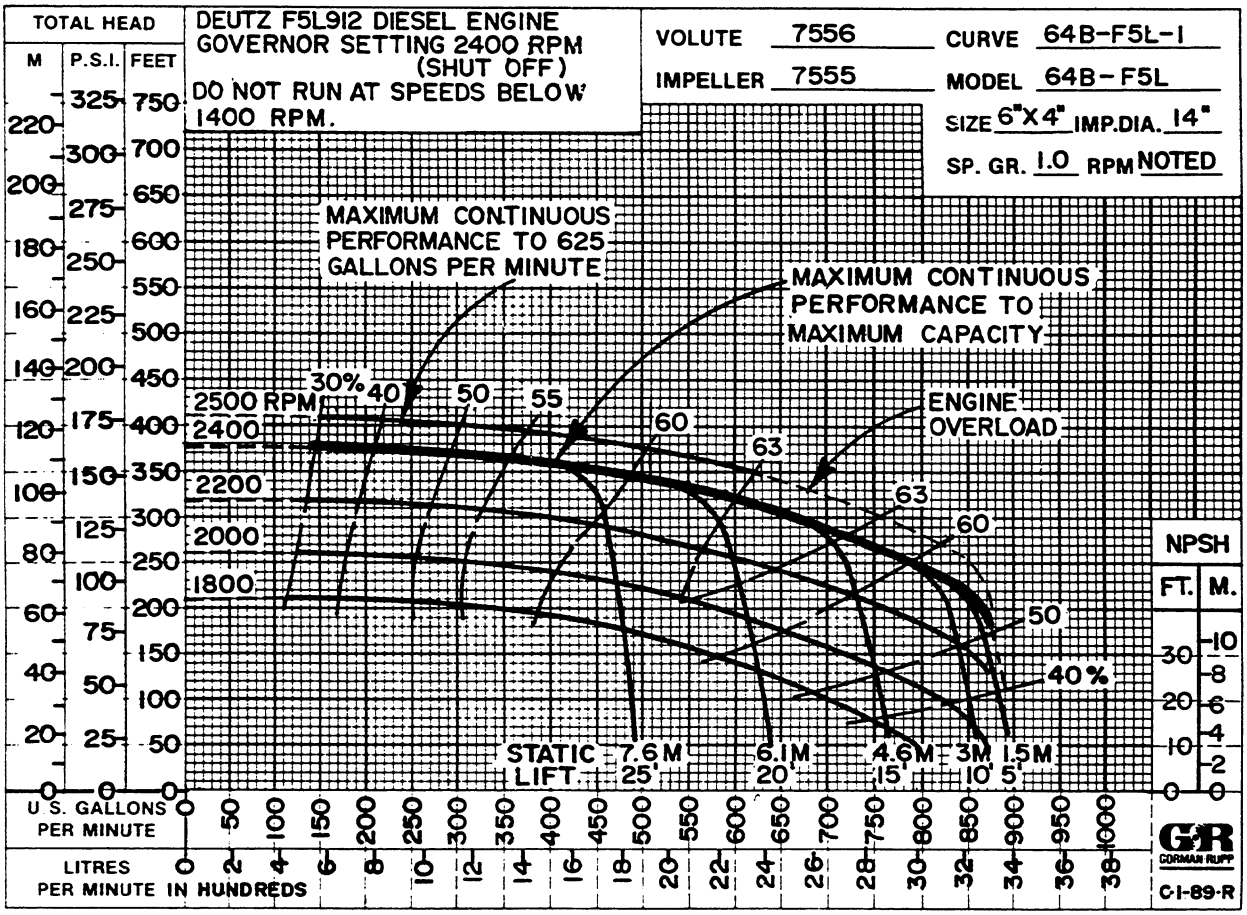

*** STANDARD PERFORMANCE FOR PUMP MODEL 64B52-F5L**

* Based on 70° F (21° C) clear water at sea level with minimum suction lift. Since pump installations are seldom identical, your performance may be different due to such factors as viscosity, specific gravity, elevation, temperature, and impeller trim.

If your pump serial number is followed by an "N", your pump is **NOT** a standard production model. Contact the Gorman-Rupp Company to verify performance or part numbers.

WARNING!

Never tamper with the governor to gain more power. The governor establishes safe operating limits that should not be exceeded. The maximum continuous operating speed for this pump is 2400 RPM.

SECTION DRAWING

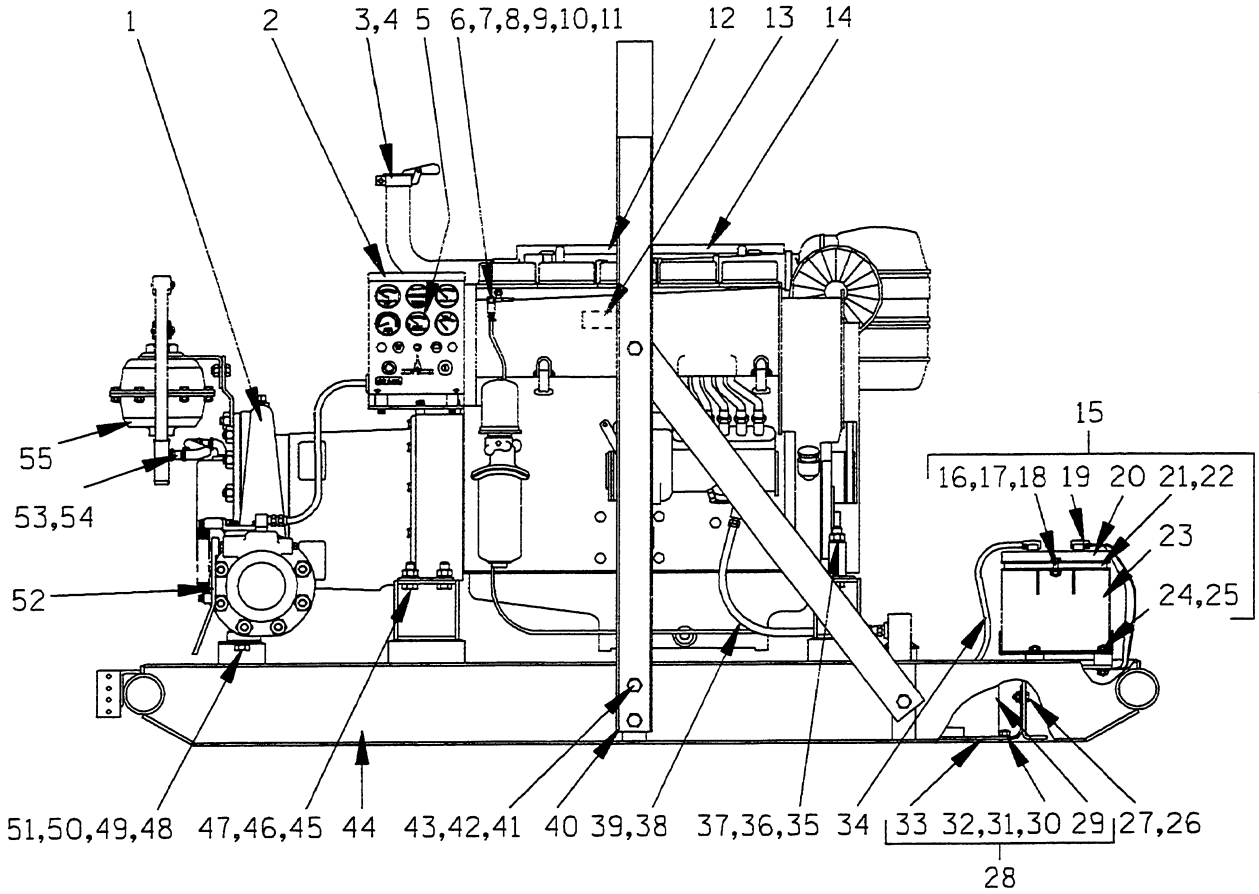

Figure 1. Pump Model 64B52–F5L

PARTS LIST
Pump Model 64B52-F5L
(From S/N 1132965 up)

If your pump serial number is followed by an "N", your pump is **NOT** a standard production model. Contact the Gorman-Rupp Company to verify part numbers.

ITEM NO.	PART NAME	PART NUMBER	MAT'L CODE	QTY
1	PUMP END ASSY	64B52-(F5L)	---	1
2	CONTROL PANEL	29277-012	---	1
3	EXHAUST ELBOW	31912-023	15990	1
4	WEATHER CAP	S1246	---	1
5	PRESS GAUGE KIT	48312-008	---	1
6	BARB HOSE FITTING	26523-441	---	1
7	FUEL RETURN LINE	11308F	---	1
8	HOSE CLAMP	26518-642	---	2
9	FUEL RETURN ASSY	14294	24030	1
10	REDUCER ELBOW	Q0402	11999	1
11	MALE CONNECTOR	26523-402	---	1
12	MUFFLER GRD ASSY	42331-033	---	1
13	WARNING DECAL	2613FE	---	1
14	DEUTZ F5L ENGINE	29217-062	---	1
15	BATTERY BOX ASSY	GRP40-08C	---	1
16	-HEX HD CAPSCREW	B0607	15991	2
17	-FLAT WASHER	K06	15991	2
18	-FLANGED HEX NUT	21765-314	---	2
19	-GRND CABLE ASSY	47311-064	---	1
20	-BATT BOX LID ASSY	42113-012	24150	1
21	-12V BATTERY	SEE OPTION LIST		REF
22	-BATTERY TAG	38818-506	---	1
23	-BATTERY BOX ASSY	42431-030	24150	1
24	-STUD MOUNT	24631-006	---	4
25	-FLANGED HEX NUT	21765-314	---	8
26	HEX HD CAPSCREW	B0604	15991	10
27	FLANGED HEX NUT	21765-314	---	10
28	FUEL TANK & GRD ASSY	46711-041	---	1
29	-FUEL TANK ASSY	46711-042	24150	1
30	-CARRIAGE BOLT	AB0604	15991	6
31	-FLAT WASHER	K06	15991	6
32	-FLANGED HEX NUT	21765-314	---	6
33	-FUEL TANK GRD	42381-046	24150	1
34	POS CABLE ASSY	47311-114	---	1
35	HEX HD CAPSCREW	B1018	15991	2
36	LOCKWASHER	J10	15991	2
37	HEX NUT	D10	15991	2
38	FUEL LINE ASSY	46341-796	---	1
39	MALE CONNECTOR	S1447	---	1
40	HOIST BAIL	13351BB	24040	1
41	HEX HD CAPSCREW	B1006	15991	8
42	LOCKWASHER	J10	15991	8
43	HEX NUT	D10	15991	8
44	COMBINATION BASE	41566-683	24150	1
45	HEX HD CAPSCREW	B1007	15991	4
46	LOCKWASHER	J10	15991	4
47	HEX NUT	D10	15991	4
48	HEX HD CAPSCREW	B1209	15991	2
49	LOCKWASHER	J12	15991	2
50	HEX NUT	D12	15991	2
51	FLAT WASHER	K12	15991	2
52	CHECK VALVE ASSY	GRP14-04A	---	1
53	HAND PRIMER HOSE	31412-121	19180	1
54	STREET ELBOW	RS06	11999	2
55	HAND PRIMER KIT	GRP43-01	---	1
NOT SHOWN:				
	CAUTION DECAL	2613FJ	---	1
OPTIONAL:				
	*12V BATTERY	29331-506	---	1
	REPAIR MUFFLER	42331-049	---	1
	GUARD ASSEMBLY			
	WHEEL KIT	GRP30-248D	---	1

* INDICATES PARTS RECOMMENDED FOR STOCK

SECTION DRAWING

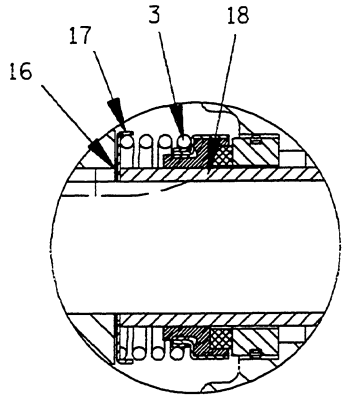

SEAL AREA DETAIL

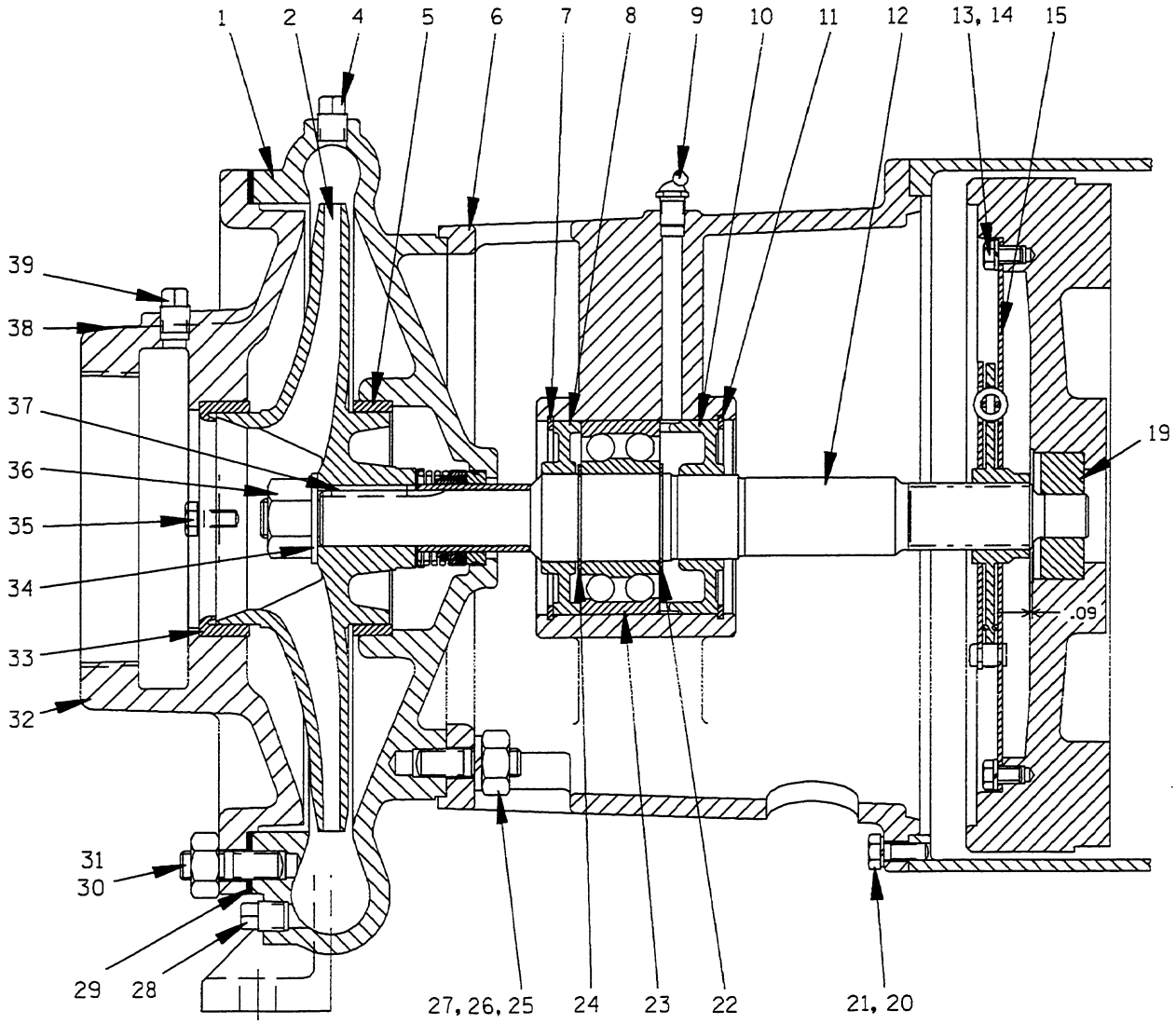

Figure 2. Pump End Assembly 64B52–(F5L)

PARTS LIST
Pump End Assembly 64B52–(F5L)

ITEM NO.	PART NAME	PART NUMBER	MAT'L CODE	QTY
1	PUMP CASING	7556C	10030	1
2 ✳	IMPELLER	7555A	10010	1
3 ✳	SEAL ASSY	25284–961	---	1
4	PIPE PLUG	P06	15079	1
5 ✳	BALANCE RING	64H6	14000	1
6	INTERMEDIATE	7013	10010	1
7	BRG RETAINING RING	S1165	---	1
8	BEARING RETAINER	7018	10010	1
9	LUBE FITTING	S194	---	1
10	BEARING RETAINER	7019	10010	1
11	BRG RETAINING RING	S1165	---	1
12 ✳	IMPELLER SHAFT	38522–317	16040	1
13	SOC HD CAPSCREW	22644–215	---	8
14	LOCKWASHER	21171–511	---	8
15	DRIVE PLATE ASSY	24521–165	---	1
16 ✳	IMP ADJ SHIM SET	37J	17090	REF
17 ✳	SPRING HOLDER	25273–266	---	1
18 ✳	SHAFT SLEEVE	3428A	16000	1
19	PILOT BUSHING	8312A	15010	1
20	HEX HD CAPSCREW	22645–164	---	12
21	LOCKWASHER	21171–511	---	12
22	BRG RETAINING RING	S1164	---	1
23 ✳	BALL BEARING	23421–461	---	1
24	BRG RETAINING RING	S1164	---	1
25	STUD	C1009	15991	4
26	LOCKWASHER	J10	15991	4
27	HEX NUT	D10	15991	4
28	CASING DRAIN PLUG	P06	15079	1
29 ✳	SUCTION HEAD GSKT	7557G	18000	1
30	STUD	C1008	15991	16
31	HEX NUT	D10	15991	16
32	SUCTION HEAD	8569	10010	1
33 ✳	WEAR RING	64H5	10018	1
34 ✳	IMPELLER WASHER	K14	15991	1
35	HEX HD CAPSCREW	B0604	15991	2
36 ✳	NYLOCK IMPELLER NUT	BC14S	15991	1
37 ✳	SHAFT KEY	N0408 1/2	15990	1
38 ✳	SUCTION STICKER	6588AG	00000	1
39	ACCESSORY PLUG	P06	11990	1
NOT SHOWN:				
	DRIVE SCREW	BM#04–03	17000	2
	STRAINER	S1529	---	1
	NAME PLATE	2613R	13990	1
	DISCHARGE STICKER	6588BJ	---	1

✳ INDICATES PARTS RECOMMENDED FOR STOCK

PUMP AND SEAL DISASSEMBLY AND REASSEMBLY

Review all SAFETY information in Section A.

Follow the instructions on all tags, label and decals attached to the pump.

This pump requires little service due to its rugged, minimum-maintenance design. However, if it becomes necessary to inspect or replace the wearing parts, follow these instructions which are keyed to the sectional views (see Figures 1 and 2) and the accompanying parts lists.

As described on the following pages, this manual will alert personnel to known procedures which require special attention, to those which could damage equipment, and to those which could be dangerous to personnel. However, this manual cannot possibly anticipate and provide detailed precautions for every situation that might occur during maintenance of the unit. Therefore, it is the responsibility of the owner/maintenance personnel to ensure that **only** safe, established maintenance procedures are used, and that any procedures not addressed in this manual are performed **only** after establishing that neither personal safety nor pump integrity are compromised by such practices.

See the accompanying literature for Installation, Operation and Maintenance of the Discharge Check Valve and the Hand Primer Assembly.

Before attempting to service the pump, switch off the engine ignition and disconnect the positive battery cable to ensure that the pump will remain inoperative. Close all valves in the suction and discharge lines.

For engine disassembly and repair, consult the literature supplied with the engine, or contact your local Deutz engine representative.

WARNING!

Before attempting to open or service the pump:

1. **Familiarize yourself with this manual.**
2. **Switch off the engine ignition and disconnect the positive battery cable to ensure that the pump will remain inoperative.**
3. **Allow the pump to cool if overheated.**
4. **Check the temperature before opening any covers, plates, or plugs.**
5. **Close the suction and discharge valves.**
6. **Vent the pump slowly and cautiously.**
7. **Drain the pump.**

WARNING!

Use lifting and moving equipment in good repair and with adequate capacity to prevent injuries to personnel or damage to equipment. Suction and discharge hoses and piping must be removed from the pump before lifting.

Suction Head Removal

(Figure 2)

Remove the suction and discharge piping. Before attempting to service the pump, remove the pump casing drain plug (28) and drain the pump. Clean and reinstall the drain plug.

Remove the hardware securing the hand primer assembly (55, Figure 1) to the pump casing.

NOTE

See the accompanying literature for maintenance and repair of the hand primer assembly.

Remove the hardware (31), and use the jacking screws (35) to force the suction head (32) out of the pump casing. Turn the screws evenly to prevent binding. Remove the suction head gasket (29).

Inspect the wear ring (33) for excessive wear or damage. The wear ring is secured in the suction head by a press fit. If replacement is required, press the wear ring from the suction head.

Separating Pump And Intermediate From Engine

(Figure 2)

To service the impeller (2), seal assembly (3) or bearing (23), the pump end must be separated from the base and engine. See Figure 1 and remove the hardware (48, 49, 50 and 51) securing the pump casing to the base (44).

NOTE

Disconnect the low discharge pressure piping from the discharge check valve or, if desired, disengage the hardware securing the discharge check valve assembly (52, Figure 1) and separate the check valve from the pump casing.

Support the pump casing and intermediate using a suitable hoist and sling, and remove the hardware (20 and 21) securing the intermediate to the engine bellhousing. Separate the assemblies by pulling the intermediate straight away from the engine. As the assemblies separate, the impeller shaft (12) will disengage from the drive plate assembly (15).

Tie and tag any leveling shims used under the pump casing mounting feet to ease reassembly.

It is not necessary to remove the drive plate assembly from the engine flywheel unless the assembly or the pilot bushing (19) must be replaced. To remove the drive plate assembly, disengage the hardware (13 and 14).

Inspect the pilot bushing and, if replacement is required, use a suitable puller to remove it from the engine flywheel.

Impeller Removal

(Figure 2)

To remove the impeller (2), reach through the discharge port and tightly wedge a block of wood between the vanes of the impeller.

NOTE

An alternate method of removing the impeller without separating the pump from the engine is to remove the suction head as previously described and use a strap wrench around the front of the impeller to remove it from the shaft. ***Be careful*** *not to damage the impeller.*

Remove the impeller nut and washer (34 and 36). Install two 3/8–16 UNC by 3 inch long capscrews in the tapped holes in the impeller, and use a suitable puller to remove the impeller from the shaft. Use caution when removing the impeller; tension on the seal spring will be released when the impeller is removed. Retain the impeller key (37).

Remove the impeller adjusting shims (16). For ease of reassembly, tie and tag the shims or measure and record their thickness.

Inspect the balance ring (5) for excessive wear or damage. The balance ring is secured in the pump casing by a press fit. If replacement is required, use a suitable puller to remove it, or carefully cut it using a chisel. **Be careful** not to damage the casing bore.

Seal Removal and Disassembly

(Figure 2)

Carefully remove the spring holder (17) and seal spring. Slide the shaft sleeve (18) and rotating portion of the seal assembly off the shaft as a unit.

Apply oil to the sleeve and work it up under the bellows. Slide the rotating portion of the seal off the sleeve.

Use a stiff wire with a hooked end to remove the stationary seat and O-ring from the pump casing bore.

If no further disassembly is required, refer to **Seal Reassembly And Installation**.

Shaft And Bearing Removal And Disassembly

(Figure 2)

When the pump is properly operated and maintained, the shaft and bearing should not require disassembly. Disassemble the shaft and bearing **only** when there is evidence of wear or damage.

CAUTION

Shaft and bearing disassembly in the field

is not recommended. These operations should be performed only in a properly-equipped shop by qualified personnel.

After separating the intermediate from the engine, remove the hardware (26 and 27) and separate the pump casing from the intermediate (6).

Use snap ring pliers to remove the bearing retaining ring (7). Place a block of wood against the drive end of the shaft (12), and tap the bearing retainer (8), shaft, and assembled bearing (23) from the bearing bore. **Be careful** not to damage the shaft.

Remove the bearing retainer from the shaft.

NOTE

There are no provisions for draining the grease from the intermediate cavity. Place a drip pan under the intermediate before removing the shaft and bearing.

After removing the shaft and bearing, clean and inspect the bearing **in place** as follows.

CAUTION

To prevent damage during removal from the shaft, it is recommended that the bearing be cleaned and inspected **in place**. It is **strongly** recommended that the bearing be replaced **any** time the shaft and bearing are removed.

Clean the intermediate, shaft and all component parts (except the bearing) with a soft cloth soaked in cleaning solvent. Inspect the parts for wear or damage and replace as necessary.

WARNING!

Most cleaning solvents are toxic and flammable. Use them only in a well ventilated area free from excessive heat, sparks, and flame. Read and follow all precautions printed on solvent containers.

Clean the bearing thoroughly in **fresh** cleaning solvent. Dry the bearing with filtered compressed air and coat with light oil.

CAUTION

Bearings must be kept free of all dirt and foreign material. Failure to do so will greatly shorten bearing life. **Do not** spin dry bearings. This may scratch the balls or races and cause premature bearing failure.

Rotate the bearing by hand to check for roughness or binding and inspect the bearing balls. If rotation is rough or the bearing balls are discolored, replace the bearing.

The bearing tolerances provide a tight press fit onto the shaft and a snug slip fit into the intermediate. Replace the bearing, shaft, or intermediate if the proper bearing fit is not achieved.

If bearing replacement is required, remove the bearing retaining ring (24) and press the bearing (23) from the shaft. It is not necessary to remove the bearing retaining ring (22) from the shaft unless replacement is required.

It is not necessary to remove the bearing retainer (10) unless replacement is required. To remove the retainer, use snap ring pliers to remove the retaining ring (11) and press the retainer from the intermediate bore.

NOTE

Note the location and position of the bearing retainers during disassembly; tie and tag the parts for ease of reassembly.

Shaft and Bearing Reassembly and Installation

Clean and inspect the bearing as indicated in **Shaft and Bearing Removal and Disassembly.**

CAUTION

To prevent damage during removal from the shaft, it is recommended that the bearing be cleaned and inspected **in place**. It

is **strongly** recommended that the bearing be replaced **any** time the shaft and bearing are removed.

Inspect the shaft for distortion, nicks or scratches or thread damage on the impeller end. Dress small nicks and burrs with a fine file or emery cloth. Replace the shaft if defective.

The bearing may be heated to ease installation. An induction heater, hot oil bath, electric oven, or hot plate may be used to heat the bearing. The bearing should **never** be heated with a direct flame or directly on a hot plate.

NOTE

*If a hot oil bath is used to heat the bearing, both the oil and the container must be **absolutely** clean. If the oil has been previously used, it must be **thoroughly** filtered.*

If removed, install the bearing retaining ring (22) in the groove in the shaft.

Heat the bearing to a uniform temperature **no higher than** 250°F (120°C), and slide the it onto the shaft until fully seated against the retaining ring. This should be done quickly, in one continuous motion, to prevent the bearings from cooling and sticking on the shaft.

WARNING!

Use caution when handling hot bearings to prevent burns.

NOTE

Position the bearing on the shaft as indicated by the following illustrations.

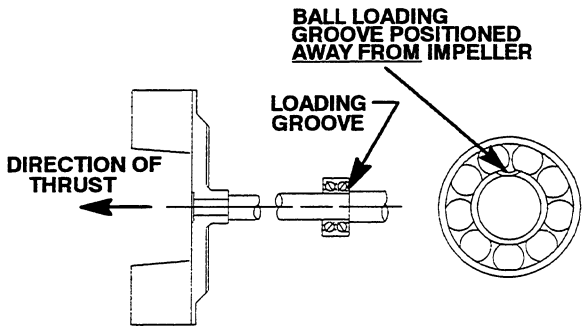

INSTALLATION OF NEW DEPARTURE OR BCA/FEDERAL MOGAL 5300W SERIES BEARINGS (OPEN OR ENCLOSED IMPELLERS)

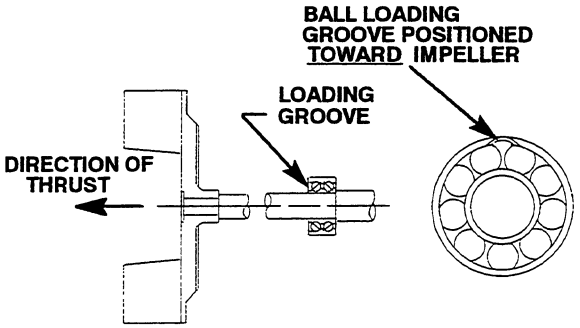

INSTALLATION OF MRC/SKF 5300M OR FAFNIR 5300W SERIES BEARINGS (OPEN OR ENCLOSED IMPELLERS)

Figure 3. Bearing Installation

After the bearing has been installed and allowed to cool, check to ensure that it has not moved out of position in shrinking. If movement has occurred, use a suitable sized sleeve and a press to reposition the bearing.

If heating the bearing is not practical, use a suitable sized sleeve and an arbor (or hydraulic) press to install the bearing on the shaft.

CAUTION

When installing the bearing onto the shaft, **never** press or hit against the outer race, balls, or ball cage. Press **only** on the inner race.

After the bearing is installed on the shaft, pack the bearing by hand (or use a bearing packer if available) with No. 0 lithium base grease until the bearing balls are thoroughly lubricated. Secure the bearing on the shaft with the bearing retaining ring (24).

If removed, install the bearing retainer (10) and retaining ring (11) in the drive side of the bearing bore. **Be sure** the retainer is properly positioned with the slotted side toward the **inside** of the bearing cavity (see Figure 2).

Slide the shaft and assembled bearing into the intermediate bore from the impeller end until the bearing seats squarely against the bearing retainer.

CAUTION

When installing the shaft and bearing into the bearing bore, push against the outer race. **Never** hit the balls or ball cage.

Position the bearing retainer (8) against the bearing, and secure it with the retaining ring (7). Check the shaft endplay.

NOTE

Impeller shaft endplay should be between .002 and .010 inch (0,05 to 0,25 mm). This endplay is designed into the intermediate.

Lubricate the bearing cavity as indicated in **LUBRICATION** at the end of this section.

If the balance ring (5) was removed, position the replacement ring the casing bore with the chamfered end toward the bore shoulder. Press the ring into the casing until it seats squarely against the casing shoulder.

NOTE

*The balance ring **must** seat squarely in the casing bore; otherwise binding and/or excessive wear will occur as the shaft turns.*

Carefully position the pump casing over the shaft. **Be careful** not to damage the shaft threads. Secure the casing to the intermediate with the hardware (26 and 27).

NOTE

*The stationary seat and O-ring for the shaft seal assembly may be installed in the pump casing before the casing is secured to the intermediate (see **Seal Reassembly and Installation**). If the stationary seat is installed, **be careful** not to damage it on the shaft threads.*

Securing Pump And Intermediate To Engine

(Figure 2)

If removed at disassembly, apply a thin coating of 'Never-Seez' lubricant to the inside diameter of the pilot bushing (19), and press it into the flywheel until fully seated. Secure the drive plate assembly to the flywheel with the hardware (13 and 14).

Slide the shaft splines into the drive plate, and secure the intermediate assembly to the engine bellhousing with the hardware (20 and 21).

CAUTION

Make certain that the drive plate and drive bushing are mounted in accordance with the dimension shown in Figure 2.

Seal Reassembly and Installation

(Figures 2 and 4)

Clean the seal cavity and shaft with a cloth soaked in fresh cleaning solvent.

WARNING!

Most cleaning solvents are toxic and flammable. Use them only in a well ventilated area free from excessive heat, sparks, and flame. Read and follow all precautions printed on solvent containers.

The seal is not normally reused because wear patterns on the finished faces cannot be realigned during reassembly. This could result in premature failure. If necessary to reuse an old seal in an emergency, **carefully** wash all metallic parts in **fresh** cleaning solvent and allow to dry thoroughly.

Handle the seal parts with extreme care to prevent damage. Be careful not to contaminate precision finished faces; even fingerprints on the faces can shorten seal life. If necessary, clean the faces with a non-oil based solvent and a clean, lint-free tissue. Wipe **lightly** in a concentric pattern to avoid scratching the faces.

Inspect the seal components for wear, scoring, grooves, and other damage that might cause leak-

age. Clean and polish the shaft sleeve, or replace it if badly worn. If any components are worn, replace the complete seal; **never mix old and new seal parts.**

If a replacement seal is being used, remove it from the container and inspect the precision finished faces to ensure that they are free of any foreign matter.

To ease installation of the seal, lubricate the stationary seat O-ring and bellows, and shaft sleeve with water or a very **small** amount of oil, and apply a drop of light lubricating oil on the finished faces. Assemble the seal as follows, (see Figure 4).

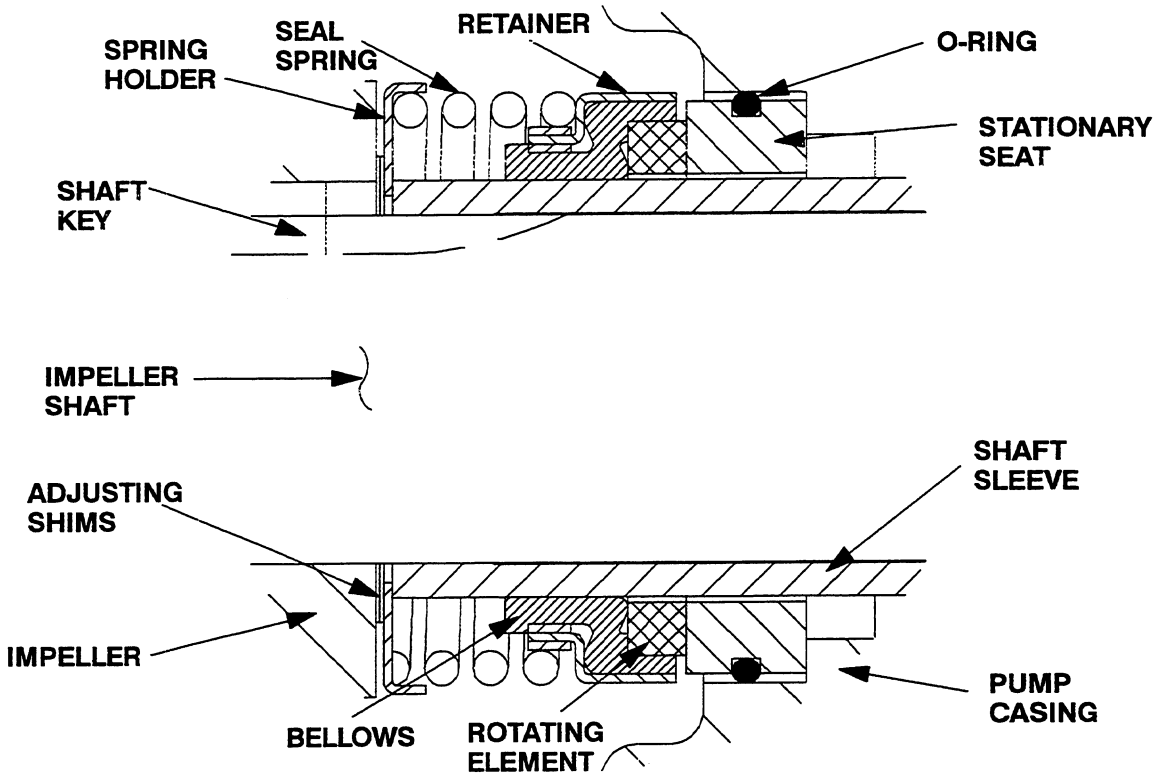

Figure 4. 25284–961 Seal Assembly

CAUTION

This seal is not designed for operation at temperatures above 160° F (71° C). Do not use at higher operating temperatures.

Inspect the pump casing and impeller shaft for burrs or sharp corners, and remove any that exist.

Secure the casing to the intermediate as described in **Shaft And Bearing Reassembly**.

Subassemble the stationary seat O-ring into the stationary seat, and press this subassembly into the pump casing until it seats squarely against the bore shoulder. Be careful not to damage the seal face. A push tube cut from a length of plastic pipe would aid this installation. The O.D. of the pipe should be approximately the same diameter as the O.D. of the seal spring.

Subassemble the rotating element into the retainer and bellows. Use even pressure to carefully press this subassembly onto the lubricated sleeve (18) until the seal face is **just flush** with the chamfered end of the sleeve.

Slide the assembled sleeve and rotating portion of the seal onto the shaft until the seal faces contact. Continue to push the sleeve through the seal until it seats squarely against the shaft shoulder.

Install the seal spring and spring holder (17).

Impeller Installation

(Figure 2)

If the balance ring (5) was removed, press the replacement ring into the pump casing as described in **Shaft and Bearing Reassembly and Installation.**

NOTE

*The balance ring **must** seat squarely in the casing bore; otherwise binding and/or excessive wear will occur as the shaft turns.*

Inspect the impeller, and replace it if cracked or badly worn. Install the same thickness of impeller shims (16) as previously removed. Install the impeller key (37), and slide the impeller completely onto the shaft. Secure the impeller with the impeller washer and nut (34 and 36).

For maximum pump efficiency, the impeller should be centered within the volute scroll.

To verify the impeller positioning, measure the pump casing and impeller as shown in Figure 5. Use these measurements to calculate the required impeller location (dimension E). Add or remove impeller adjusting shims until dimension E is obtained.

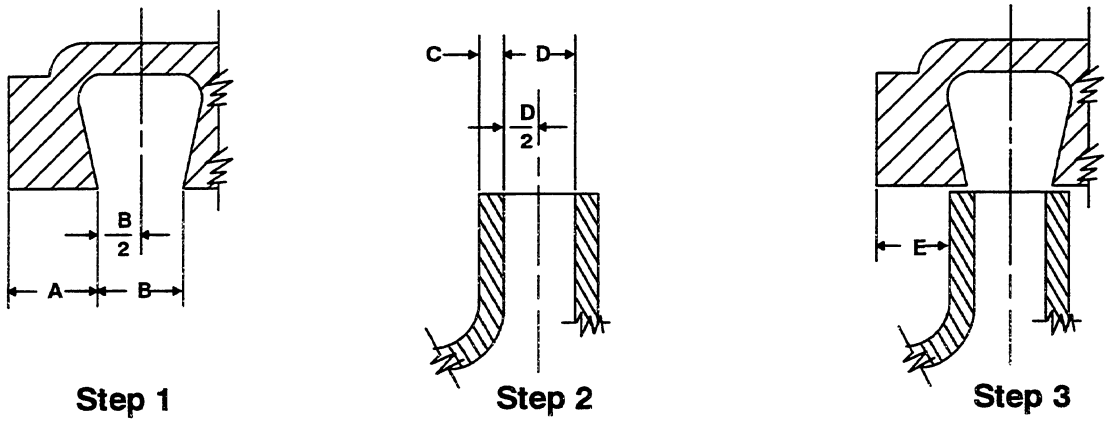

$$\left(A+\frac{B}{2}\right) - \left(C+\frac{D}{2}\right) = E$$

Figure 5. Centering Impeller Within Volute Scroll

NOTE

After the impeller has been properly positioned, check for free rotation. Correct any scraping binding before further reassembly.

Suction Head Installation

(Figure 2)

If removed at disassembly, press the wear ring (33) into the suction head (32) until it seats squarely against the bore shoulder.

CAUTION

The wear ring **must** seat squarely in the suction head or binding and/or excessive wear will result.

Install the suction head gasket (29), and secure the suction head to the pump casing with the nuts (31). Make sure the jacking screws (35) do not interfere with the suction head seating.

Final Pump Assembly

Turn the shaft to make sure that the impeller is not binding or scraping. If it does, check the installation of the wear ring and balance ring, or remove

adjusting shims until the impeller rotates freely when the pump is fully assembled.

Install any leveling shims used under the pump casing mounting feet, and secure the pump casing to the base (44, Figure 1) with the mounting hardware (48, 49, 50 and 51, Figure 1).

Secure the hand primer (55, Figure 1) to the pump casing. If removed, secure the discharge check valve (52, Figure 1) to the pump casing discharge port. Connect any instrumentation lines or fittings removed from the check valve or hand primer.

Be sure the pump and intermediate are secure to the engine and the base.

Install the suction and discharge lines and open all valves. Make certain that all piping connections are tight, properly supported and secure.

Be sure the pump and engine have been properly lubricated, see **LUBRICATION**.

Before starting the pump, prime the pump using the hand-operated primer (see **OPERATION**, Section C).

LUBRICATION

Seal Assembly

(Figure 2)

The seal assembly is lubricated by the medium being pumped, and no additional lubrication is required.

Bearings

(Figure 2)

The intermediate was fully lubricated when shipped from the factory. Under normal conditions, add three shots of No. 0 lithium base grease from a grease gun through the grease fitting (9) after each 250 hours of operation or once each month, whichever comes first. **Do not** over-lubricate. Over-lubrication can cause the bearing to over-heat, resulting in premature bearing failure.

CAUTION

If grease is forced out around the shaft as new grease is added, the bearing cavity is full, and should be disassembled and cleaned immediately.

There are no provisions in the bearing cavity to drain or flush the lubricant. The pump and intermediate must be disassembled to completely clean and maintain this cavity.

Under normal conditions, change the grease after each 5000 hours of operation, or at 12 month intervals, whichever comes first. Change the grease more frequently if the pump is operated continuously or installed in an environment where variable hot and cold temperatures are common.

When lubricating a dry (overhauled) intermediate, fill the cavity through the lubrication fitting with approximately one fourth of a pound (0,11 kg) of grease (approximately one-third full).

For cold weather operation, consult the factory or a lubricant supplier for the recommended grade of lubricant.

Engine

Consult the literature supplied with the engine, or contact your local Deutz engine representative.

For U.S. and International Warranty Information,
Please Visit www.grpumps.com/warranty
or call:
U.S.: 419—755—1280
International: +1—419—755—1352

For Canadian Warranty Information,
Please Visit www.grcanada.com/warranty
or call:
519—631—2870

THE GORMAN-RUPP COMPANY ● MANSFIELD, OHIO
GORMAN-RUPP OF CANADA LIMITED ● ST. THOMAS, ONTARIO, CANADA