C

OM-01725-OM02
June 1, 1983
REV. B

S SERIES

INSTALLATION, OPERATION, PARTS LIST, AND MAINTENANCE MANUAL

MODEL

S2B12-575V 3P

THE GORMAN-RUPP COMPANY • MANSFIELD, OHIO
GORMAN-RUPP OF CANADA LIMITED • ST. THOMAS, ONTARIO, CANADA
Printed in U.S.A.

TABLE OF CONTENTS

INTRODUCTION

This Installation, Operation, and Maintenance Manual is designed to help you achieve the best performance and longest life from your Gorman-Rupp pump.

This pump is specifically designed for mine dewatering applications. It is capable of handling most mildly corrosive, nonvolatile and nonflammable liquids encountered in standard mining operations. The basic material of construction is aluminum, with gray iron or bronze wearing parts (suction casing and seal plate are gray iron; impeller is manganese-bronze). The pump may be operated fully or partially submerged, since the integral air filled electric motor is thermally protected and cooled by the liquid being pumped. The motor must be operated through the control box furnished with the pump as standard equipment. The pump and control comply with MSHA, schedule 2G, regulations and have been approved for use in hazardous locations by the Pennsylvania Department of Environmental Resources (D.O.E.R.).

If there are any questions regarding the pump or motor which are not covered in this manual or in other literature accompanying this unit, please contact your Gorman-Rupp distributor or the Gorman-Rupp Company:

The Gorman-Rupp Company P.O. Box 1217 Mansfield, Ohio 44901-1217	or	Gorman-Rupp of Canada Limited 70 Burwell Road St. Thomas, Ontario N5P 3R7

The following are used to alert maintenance personnel to procedures which require special attention, to those which could damage equipment, and to those which could be dangerous to personnel:

NOTE

Instructions to aid in installation, operation, and maintenance or which clarify a procedure.

CAUTION

Instructions which must be followed to avoid causing damage to the product or other equipment incidental to the installation. These instructions describe the requirements and the possible damage which could result from failure to follow the procedures.

WARNING

These instructions must be followed to avoid causing injury or death to personnel, and describe the procedure required and the injury which could result from failure to follow the procedure.

WARNINGS - SECTION A

THESE WARNINGS APPLY TO THE "S-SERIES" SUBMERSIBLE MOTOR OPERATED PUMPS.

WARNING

Before attempting to open or service the pump:

1. Familiarize yourself with this manual.
2. Lock out the power supply to the control panel to ensure that the pump will remain inoperative.
3. Allow the pump to cool if overheated.
4. Close the discharge valve (if used).

WARNING

The pump motor is designed to be operated through the control box furnished with the pump. The control box provides overload protection and power control. Do not connect the pump motor directly to the incoming power lines.

WARNING

The electrical power used to operate this pump is high enough to cause injury or death. Obtain the services of a qualified electrician to make all electrical connections. Make certain that the pump and enclosure are properly grounded, and that the incoming power matches the requirements of the pump and control.

WARNING

The electrical power to operate this pump is high enough to cause injury or death. Make certain that the control handle on the control box is in the OFF position and locked, or that the power supply to the control box has been otherwise cut off and locked out, before attempting to open or service the pump assembly. Tag electrical circuits to prevent accidental start-up.

WARNING

All electrical connections must be in accordance with MSHA, schedule 2G. If there is a conflict between the instructions provided and MSHA specifications, MSHA specifications shall take precedence. All electrical equipment supplied with this pump was in conformance with MSHA requirements in effect on the date of manufacture. Failure to follow applicable specifications, or substitution of electrical parts not supplied or approved by the manufacturer, can result in severe injury or death.

WARNING

This pump is designed to handle non-flammable liquids encountered in mine dewatering. Do not attempt to pump volatile, flammable, or highly corrosive liquids which may damage the pump or endanger personnel as a result of pump failure.

WARNING

After the pump has been installed, make certain that the pump and all piping connections are secure before operation.

WARNING

Approach the pump cautiously after it has been running. Although the motor is cooled by the liquid being pumped, normal operating temperatures can be high enough to cause burns. The temperature will be especially high if operated against a closed discharge valve. Never operate against a closed discharge valve for long periods of time.

WARNING

Do not open the control box in an explosive atmosphere. When sealed, the control box is explosion proof to prevent the ignition of combustible gases. Opening the box in an explosive atmosphere could result in fire or explosion.

INSTALLATION - SECTION B

This section is intended only to summarize recommended installation practices for the pump and control box. If there are any questions concerning your specific installation, contact your Gorman-Rupp distributor or the Gorman-Rupp Company.

All functions performed by the customer on the pump or control must be done in accordance with MSHA, schedule 2G regulations to ensure the explosion proof integrity. No alterations of original design may be made without the consent of the Gorman-Rupp Company and MSHA.

CAUTION

To retain "permissibility" of this equipment, the following conditions shall be satisfied:

1. GENERAL SAFETY. Frequent inspection shall be made. All electrical parts, including the portable cable and wiring, shall be kept in a safe condition. There shall be no openings into the casings of the electrical parts. A permissible distribution box shall be used for connection to the power circuit unless connection is made in fresh intake air. The machine frame shall be effectively grounded. The power wires shall not be used for grounding. The operating voltage must match the voltage rating of the motor(s) ±10%.

2. SERVICING. Explosion-proof enclosures shall be restored to the state of original safety with respect to all flame arresting paths, lead entrances, etc., following disassembly for repair or rebuilding, whether by the owner or an independent shop.

3. FASTENING. All bolts, nuts, screws, and other means of fastening, and also threaded covers, shall be in place, properly tightened and secured.

4. RENEWALS AND REPAIRS. Inspections, repairs, or renewals of electrical parts shall not be made unless the portable cable is disconnected from the circuit furnishing power, and the cable shall not be connected again until all parts are properly reassembled. Special care shall be taken in making renewals or repairs. Leave no parts off. Use replacement parts exactly like those furnished by the manufacturer. When any lead entrance is disturbed, the original leads or exact duplicates thereof shall be used and stuffing boxes shall be repacked in the approved manner.

5. CABLE REQUIREMENTS. A flame-resistant portable cable bearing a MSHA assigned identification number, adequately protected by an automatic circuit-interrupting device, shall be used. Special care shall be taken in handling the cable to guard against mechanical injury and wear. Splices in portable cables shall be made in a workmanlike manner, mechanically strong, and well insulated. One temporary splice may be made in any trailing cable. Such trailing cable may only be used for the next 24-hour period. No temporary splice shall be made in a trailing cable within 25 feet of the machine, except cable reel equipment. Connections and wiring to the outby end of the cable shall be in accordance with recognized standards of safety.

PREINSTALLATION INSPECTION

The pump assembly and control box were inspected and tested before shipment from the factory. Before installation, check for damage which may have occurred during shipment. Check as follows:

a. Check the pump assembly for cracks, dents, damaged threads, and other obvious damage.

b. Check for and tighten loose attaching hardware. Since gaskets tend to shrink after drying, check for loose hardware at mating surfaces.

c. The standard pump is connected to the control box with 50 ft. of power cable. Inspect the cable for cuts or damage.

d. Check the control box for cracks, dents, and other obvious damage.

e. Check that all control box components are securely attached to their mounting surfaces, and that the electrical connections are tight and free of corrosion.

f. Compare the amperes, phase, voltage, and hertz indicated on the motor name plate to the ratings indicated for the control box.

g. Carefully read all tags, decals, and markings on the pump assembly and the control box, and perform all duties indicated.

h. Check the pump and motor for any oil leaks. An oil leak may indicate a cut O-ring or other damage.

i. If the pump and control box have been stored for more than 12 months, some of the components or lubricants may have exceeded their maximum shelf life. These **must be inspected or replaced** to insure maximum pump service.

If the maximum shelf life has been exceeded, or if anything appears to be abnormal, contact your Gorman-Rupp distributor or the factory to determine the repair or updating policy. **Do not** put the pump into service until appropriate action has been taken.

Lubrication

This pump utilizes one lubrication cavity, located just behind the seal plate. It is filled with premium quality submersible pump oil which lubricates two shaft seals. The motor operates in air and requires no lubrication.

The lower shaft seal prevents liquid from entering the lubrication cavity, while the upper shaft seal prevents oil leakage into the motor. The upper seal also acts as backup protection in the event of lower seal failure.

The lubrication cavity was fully lubricated when shipped from the factory. Check the oil level before installing the pump (see **LUBRICATION** in **MAINTENANCE AND REPAIR**). An additional quart of oil has been provided with the pump to "top off" the oil cavities. If the oil level is abnormally low, determine the cause before putting the pump into service.

PUMP INSTALLATION

Pump Specifications

See Table 1 and 1A for the typical pump specifications and MSHA approval data.

Table 1. Pump Specifications

Model Number	Voltage/ Phase	Motor Horse-power	Motor Speed (RPM)	Full Load Amperes	No Load Amperes	Locked Rotor Amperes	Discharge Size (NPT)
S2B12	575/3	3 1/2	3450	2.9	1.6	20	2

Table 1A. Additional Specifications And Approval Data

MSHA approval number	2G-3015A-1
Pump cable (special 5-conductor w/ground and ground check)	P-122-MSHA
Control box	
Specification	NEMA Type 10, MSHA Certified
MSHA certification number	X/P-3026-0
Trailing Cable	Customer Furnished (See Field Wiring Connections)
Motor	
MSHA certification number	X/P-3142-0
Weights	
Pump only	60 pounds (24 kg)
Control box only	30 pounds (14 kg)
Pump, control box, and 50 ft. of cable	113 pounds (55 kg)
Seal oil cavity capacity (approx)	1 U.S. pint (0.47 liter)
Commonwealth of Pennsylvania Approval Number	BFE-637-77

Pump Dimensions

The standard pump is provided with a suction strainer to prevent large solids from clogging the impeller. On high discharge head applications, discharge of another pump, allowing one pump to feed the other. the strainer can be replaced with an optional staging adaptor to allow one pump to feed another.

See Figure 1 on page B-4 for the approximate physical dimensions of the pump.

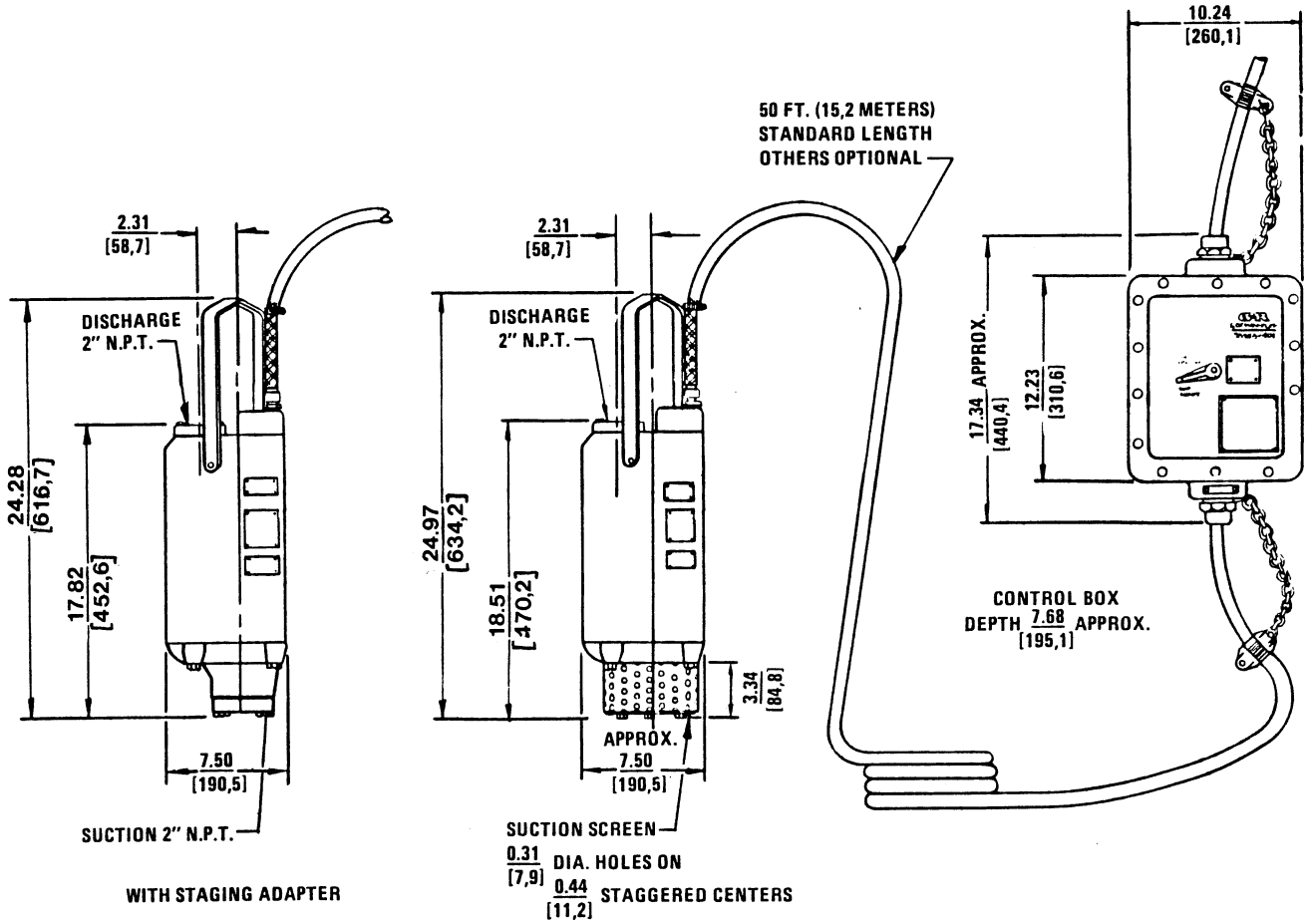

Figure 1. Pump Model S2B12-575V 3P

Lifting

Use lifting equipment with a capacity of at least **300 pounds**. This pump weighs approximately **60 pounds**, not including the weight of accessories and power cable. Customer installed equipment such as discharge line **must** be removed before attempting to lift.

WARNING

Do not attempt to lift the pump by the motor power cable or the piping. Attach proper lifting equipment to the hoisting bail fitted to the pump. If chains or cable are wrapped around the pump to lift it, make certain that they are positioned so as not to damage pump, and so that the load will be balanced.

Positioning The Pump

This pump is designed to operate fully or partially submerged. It may also be operated in air for extended periods. The rotating parts are oil lubricated, and the motor is cooled by a constant flow of liquid or air discharged through internal passage(s).

The pump will operate if positioned on its side, but this is not recommended because the motor torque could cause the pump to roll during operation.

The pump should be independently secured and supported by the hoisting bail. If the application involves a lot of debris, protect the pump from excessive wear and clogging by suspending it in a perforated barrel or culvert pipe. If the bottom is heavily sludge-covered, rest the pump on support blocks or suspend it from a raft or similar device near the surface of the liquid. See Figure 2 for typical pump installations.

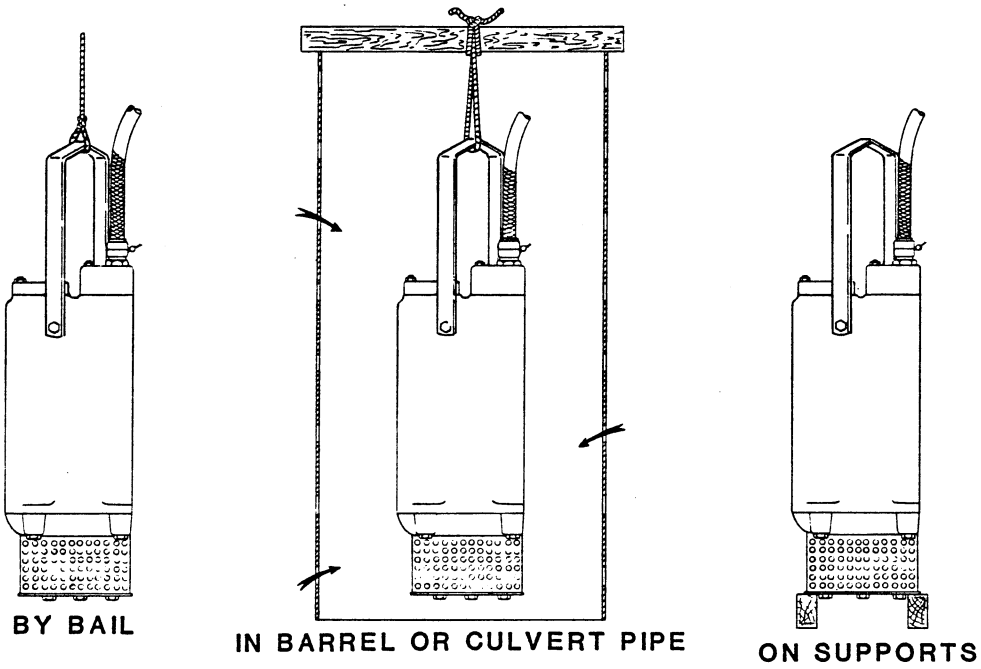

Figure 2. Typical Pump Installations.

All liquid entering the pump must pass through a strainer screen. Any spherical solids which pass through the screen will pass through the pump.

NOTE

Before actual operation, check the direction of impeller rotation to ensure that the pump is properly wired to the control box. See **Checking Pump Rotation** in **OPERATION** section.

Piping

No suction piping is required in a standard submerged application.

To determine the size of the discharge connection, see Table 1, PUMP SPECIFICATIONS. Either hose or rigid pipe may be used. To facilitate mobility and maintenance, it is recommended that the discharge line be fitted with a quick disconnect fitting near the pump. The discharge line must be independently supported to avoid strain and vibration on the pump.

For maximum pumping capacity, keep the discharge as short and straight as possible. Minimize the use of elbows and fittings which increase friction losses through the discharge piping system.

It is recommended that a check valve or throttling valve be installed in the discharge line to control siphoning or back flow when the pump is shut off.

CONTROL BOX INSTALLATION

This pump is driven by an integral 575 VAC, 60 hertz, 3 phase, 3 1/2 HP motor. It is designed to operate through the control box furnished with the pump.

WARNING

The pump motor is designed to be operated through the control box furnished with the pump. The control box provides overload protection and power control. Do not connect the pump motor directly to the incoming power lines.

Enclosure

The control box is a NEMA type 10, MSHA Certified. **The enclosure is not designed to be watertight, and should not be submerged.** See Figure 3 on page B-7 for enclosure dimensions and callouts.

Secure the control box vertically on a level surface, which is above flood level. It should be easily accessible to the operator, and located close enough to the pump to avoid excessive voltage drop due to cable length. (See **Pump Power Cable Connections**). After the box is installed, make certain the front cover latches properly.

CAUTION

Failure to mount the control box vertically on a level surface may affect operation of the pump controls.

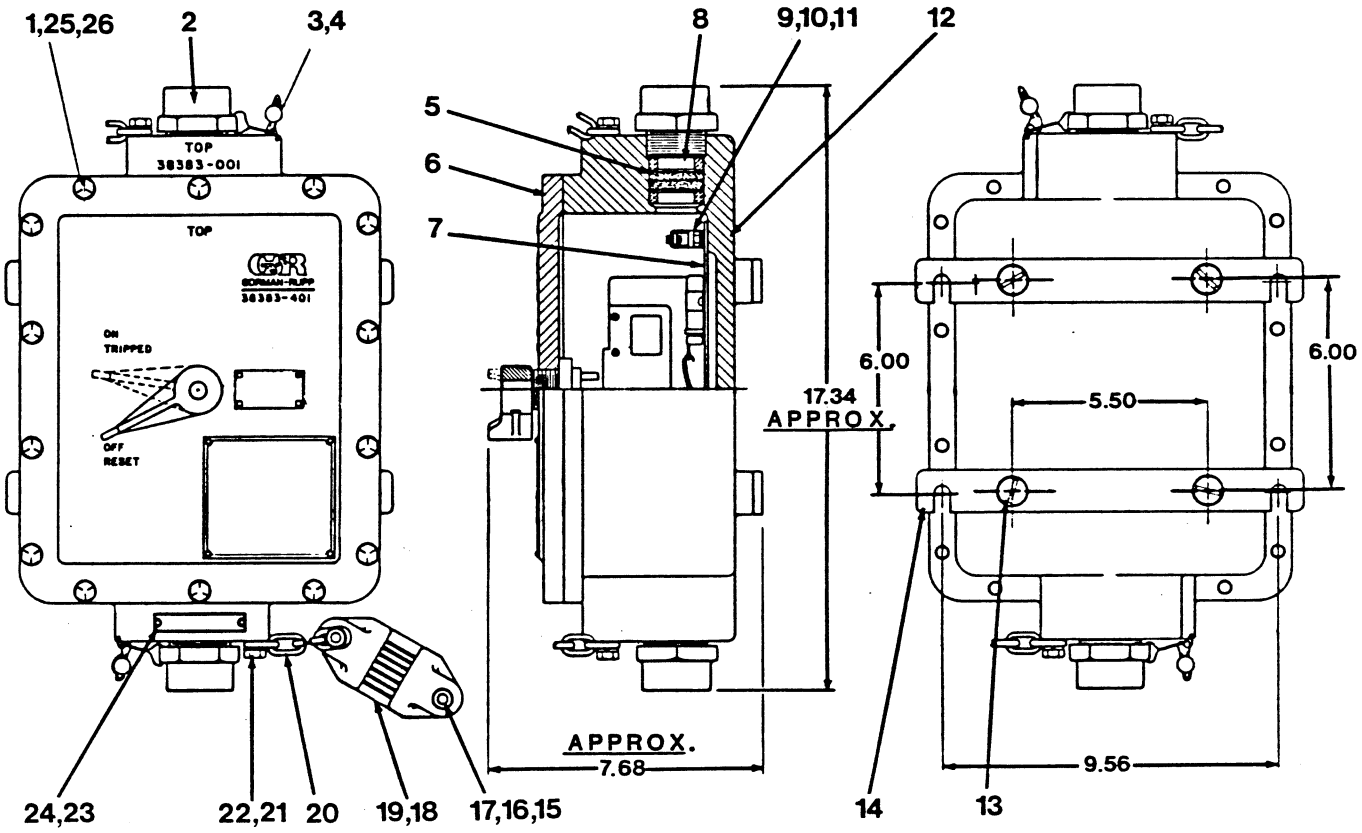

Control Box Part No.	Volt/ Phase	Mtg. Plate Part No.	Relay rating (amps)	Hold (amps)	Trip (amps)	MSHA Cert. No.
47631-005	575/3	47882-002	4.2	4.5	5.2	X/P-3026-0

Figure 3. 47631-005 Control Box Assembly

PARTS LIST, EXTERNAL PARTS
47631-005 CONTROL BOX ASSEMBLY
(see Figure 4 on page B-9 for internal parts)

ITEM NO.		PART NAME	PART NUMBER	MATL CODE	QTY
1		HEX HD CAPSCREW	21632-597	-----	14
2		PACKING GLAND NUT	31874-017	13040	2
3	*	LEAD SEAL	21188-002	-----	2
4	*	WIRE 14 IN	31311-004	17990	2
5	*	ROPE PACKING	31313-009	22120	4
6	*	ENCLOSURE COVER ASSY	42114-074	-----	1
		-ENCLOSURE COVER	38383-401	13010	1
	*	-ON/OFF HANDLE	38421-012	13040	1
	*	-HANDLE SETSCREW	GA00501 1/2	15990	1
		-MSHA CERTIFICATION PLATE	2613-GL	17020	1
		-DRIVE SCREW	BM#04-03	17000	4
	*	-SHAFT ASSY	41881-276	24150	1
	*	-SHAFT BUSHING	31513-031	13150	1
	*	-BUSHING SETSCREW	GA#10-01-S	15990	1
		-WIRING DECAL	2613-GM	00000	1
		-PENNSYLVANIA APPROVAL PLATE	02613-FL	17020	1
		-DRIVE SCREW	BM#04-03	17000	4
7		MOUNTING PLATE ASSY	47882-002	-----	1
8	*	PACKING WASHER	31133-109	13150	4
9		GROUND LUG	27222-004	-----	2
10		HEX HD CAPSCREW	B00402	15991	4
11		LOCKWASHER	J00004	15991	4
12		ENCLOSURE	38383-001	13040	1
13		FLAT HD MACHINE SCREW	Y00602	15991	4
14		MOUNTING BRACKET	33657-002	13090	2
15		HEX HD CAPSCREW	B00608	15991	4
16		LOCKWASHER	J00006	15991	4
17		HEX NUT	D00006	15991	4
18		CABLE CLAMP	38116-603	13040	4
19		RUB BRACKET PROT	33573-001	-----	4
20		CHAIN	41158-009	-----	2
21		HEX HD CAPSCREW	B00604	15991	2
22		LOCKWASHER	J00006	15991	2
23		ASSEMBLY PLATE	2613-GG	17020	1
24		DRIVE SCREW	BM#04-03	17000	2
25		LOCKWASHER	J00006	15991	14
26		FLATWASHER	KE00006	15991	14

*INDICATES PARTS RECOMMENDED FOR STOCK

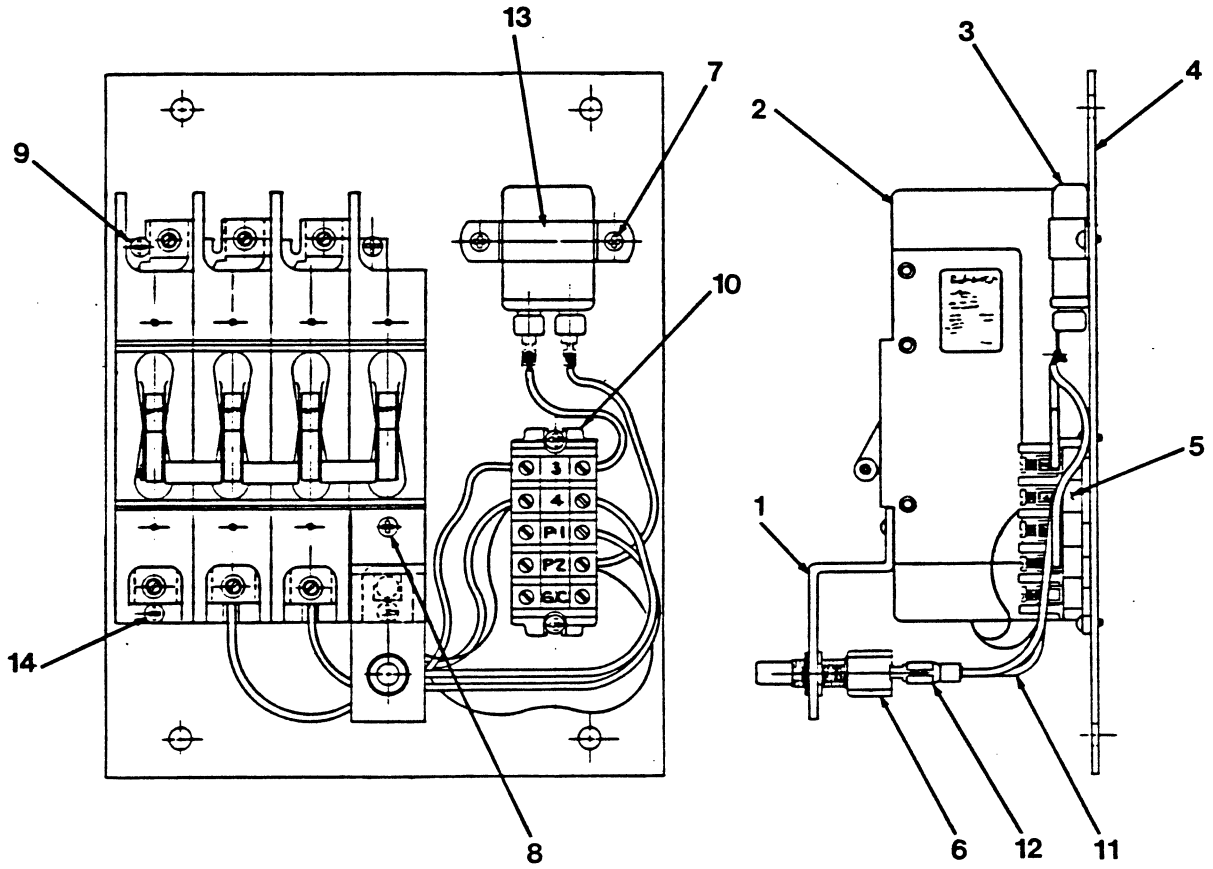

Figure 4. Electrical Mounting Plate Assembly

PARTS LIST, INTERNAL PARTS
47631-005 CONTROL BOX ASSEMBLY
(see Figure 3 on page B-7 for external parts)

ITEM NO.		PART NAME	PART NUMBER	MATL CODE	QTY
1		SWITCH BRACKET	34512-027	-----	1
2	*	RELAY/SHUNT TRIP	27541-494	-----	1
3	*	G-E CAPACITOR	27571-332	-----	1
4		MOUNTING BRACKET	33287-011	-----	1
5		TERMINAL BLOCK	27233-203	-----	5
6	*	CUTLER HAMMER SWITCH	27341-211	-----	1
7		RD PHILLIP MACHINE SCREW	21771-541	-----	2
8		RD PHILLIP MACHINE SCREW	21771-542	-----	1
9		RD PHILLIP MACHINE SCREW	21771-552	-----	4
10		END FOR TERMINAL BLOCK	27233-021	-----	1
11		WIRE	38746-027	-----	1
12		TERMINAL	S01790	-----	2
13		BRACKET	27581-904	-----	1
14		RD PHILLIP MACHINE SCREW	21771-553	-----	2

*INDICATES PARTS RECOMMENDED FOR STOCK

Grounding Methods

Electrically ground the installation before connecting the field wiring to the control box. Install a grounding terminal to the enclosure and connect it to a properly imbedded electrode.

The material used for the electrode **must** be an excellent conductor of electricity, such as copper. If iron or steel is used, it must be galvanized or otherwise metal plated to resist corrosion. **Do not** coat the electrode with any material of poor conductivity such as paint or plastic.

The electrode must conform to the recommendations of MSHA, schedule G. Follow all installation requirements of the MSHA, and all applicable local codes. See Figure 5 for some suggested grounding methods.

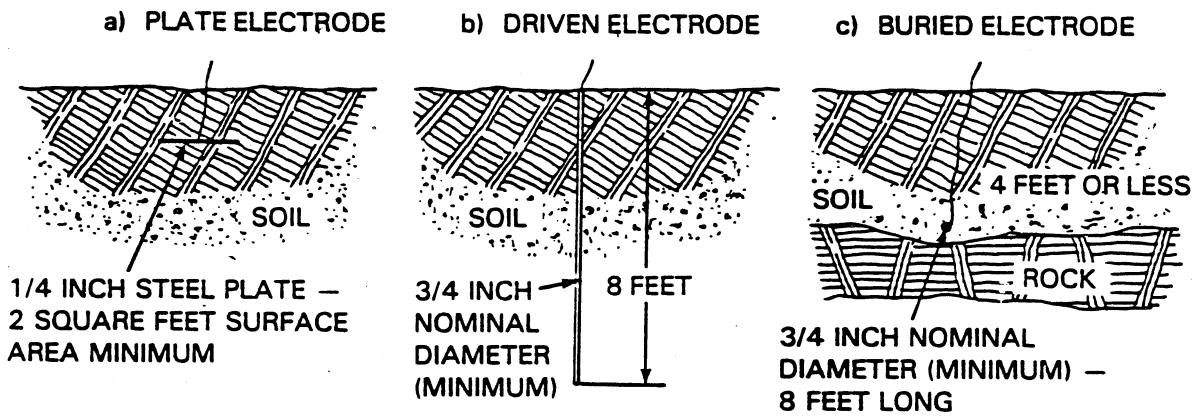

Figure 5. Suggested Grounding Methods

a. **Plate Electrode**: An iron or steel plate, 1/4 inch thick, completely imbedded in the ground. The plate must present a surface of a least 2 square feet.

b. **Driven Electrode**: A rod or pipe, 3/4 inch diameter minimum, 8 feet long, completely driven into the ground.

c. **Buried Electrode**: If rock or stone prevents imbedding the full 8 foot length of the ground rod, bury it in a horizontal trench.

   Space the ground rod or plates at least 6 feet from any other electrode or ground rod, such as those used for signal circuits, radio grounds, lightning rods, etc.

   The earth surrounding the ground rod or plate **must** contain enough moisture to make a good electrical connection. In dry or sandy areas, pour water around the rod or consult qualified personnel to devise a method of improving the connection.

WARNING

The electrical power used to operate this pump is high enough to cause injury or death. Make certain that the control box is properly grounded after installation.

Field Wiring Connections (Incoming Power)

The trailing cable from the power source to the control box must be furnished by the customer. The cable must be flame-resistant, protected by an instantaneous circuit breaker, and meet the following specifications.

Table 4. Trailing Cable Requirements for Control Box Connections

Cable Number	Cable Type	Number of Conductors	Cable O.D. (inches)	Circuit Breaker Setting	Max. Length (feet)
8	G-GC	3	0.91±0.03	200 Amps	500

WARNING

The electrical power used to operate this pump is high enough to cause injury or death. Obtain the services of a qualified electrician to make all electrical connections. Make certain that the pump and enclosure are properly grounded, and that the incoming power matches the requirements of the pump and control.

WARNING

Do not open the control box in an explosive atmosphere. When sealed, the control box is explosion proof to prevent the ignition of combustible gases. Opening the box in an explosive atmosphere could result in fire or explosion.

The pump control is designed to regulate a 575 volt, 3-phase, 60 hertz power supply. The field wiring must be properly sized to insure an adequate voltage

supply. The voltage available **at the motor** must be within the range indicated in Table 2.

To calculate the voltage available at the motor proceed as follows:

a. Measure the incoming voltage across lines (1 & 2, 2 & 3, and 1 & 3) while the pump is **operating at full capacity**. See Figure 6 on page B-15..

b. Next, subtract the motor cable voltage drop (see Table 3, Motor Cable Specifications).

c. Do not continue to operate the pump if this voltage is not within the recommended limits. Obtain the services of a qualified electrician to determine the correct field wiring size and other details to insure an adequate voltage supply to the pump.

Table 2. Pump Motor Voltage Limits

Nominal Voltage	Phase	Minimum Voltage	Maximum Voltage
575	3	520	630

Use the packing gland nuts to secure and seal the incoming field wiring to the control box. Make certain all connections are tight and that cable entry points are rainproof. Support the cable weight, if required, to prevent excessive strain on cable clamps and cable.

NOTE

After the power cables have been installed to the control box, the packing gland nuts must be wired and sealed before operation. See **Terminal/Housing Power Cable Reassembly** in Section E for instructions.

Pump Power Cable Connections

WARNING

The electrical power used to operate this pump is high enough to cause injury or death. Make certain that incoming power is OFF and LOCKED OUT before connecting power or accessory cables to the control box. Obtain the services of a qualified electrician to make all electrical connections.

The standard pump is provided with a 50-foot power cable, factory wired into the control box. (See Table 3 for cable specifications.) If a longer power cable is required, an optional cable assembly **must** be ordered from the factory. Splicing

of the power cable is **not** recommended by the Gorman-Rupp Company due to safety and warranty considerations.

WARNING

Never attempt to alter the length or repair any power cable with a splice. The pump motor and cable must be completely waterproof. Injury or death may result from alterations.

Table 3. Cable Requirements for Pump Electrical Connections, Model S2B12

Voltage/ Phase	A.W.G. Cable Size	Cable OD (inches)	Conductor Dia. (inches)	Amp Rating* at 30°C (amperes)	DC Resistance at 25°C (ohms/ 1000 ft)	Voltage Drop at Max. Load per 100 ft
575/3	12	0.89	0.10	30	1.72	1.00

*Applies only to SPC type cable. Refer to manufacturer's specifications for other cable.

When necessary to change or connect the pump power cable to the control box, make certain the incoming power is **OFF** and **LOCKED OUT**. Make certain the control box is **PROPERLY GROUNDED** and that the electrical data on the control matches the motor name plate data.

Connect the pump power cable to the control box as shown in Figure 6 on page B-15.. Use the packing gland nuts to secure and seal the power and accessory cables to the control box. Make certain that all connections are tight and that cable entry points are rainproof.

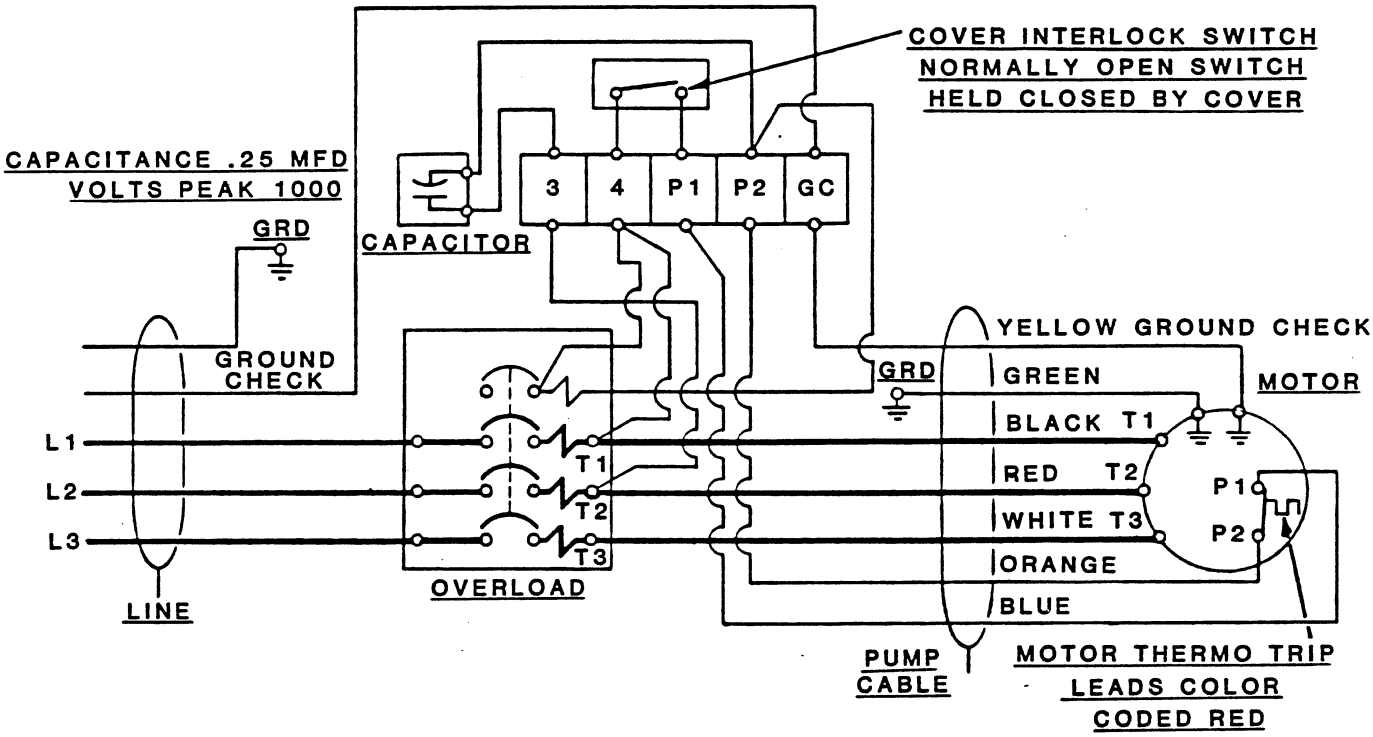

Figure 6. Connection Diagram For 47631-005

PUMP POWER CABLE CONNECTION INSTRUCTIONS

1. Run pump cable through packing gland nuts and washers (concave side of washer to be towards packing) at bottom of control.
2. Connect black, red and white power leads to terminals "T1", "T2", and "T3".
3. Connect green ground lead to terminal "GRD".
4. Connect yellow ground check lead to terminal "GC".
5. Connect blue control lead to terminal "P1".
6. Connect orange control lead to terminal "P2".
7. Install packing in gland with washers on each side, and tighten the packing gland nut. With the nuts tight and the packing fully compressed, there must be a minimum of 1/8-inch space between the bottom of the nut and the enclosure.
8. Use seal wire part number 31311-004 with lead seal part no. 21188-002 to secure packing gland nut to control enclosure. Use hole in hex of nut and hole at top left of enclosure to prevent loosening of nut.

OPERATION - SECTION C

CONTROL BOX FUNCTION

A control box is provided to facilitate operation of the pump. It contains controls for starting and stopping the pump, and provides overload protection for the pump motor.

WARNING

The pump motor is designed to be operated through the control box furnished with the pump. The control box provides overload protection and power control. Do not connect the pump motor directly to the incoming power lines.

CAUTION

Since operation of the pump motor is dependent upon the quality and performance of the electrical controls, the pump warranty is valid only when controls have been specified or provided by the Gorman-Rupp Company.

Component Function

The control box contains the following hand operated switches and controls:

- The **control handle** operates the control box circuit breakers. In the OFF position, the control handle opens the circuit breakers to interrupt incoming power through the control box and prevent pump operation. In the ON position, it closes the circuit breakers to permit pump operation. The circuit breakers will open or "TRIP" automatically in the event of a short circuit overload current, or thermal excess within the pump motor or electrical system. When tripped, move the control handle to OFF and back to ON to reset the circuit breakers.

- The control box contains an integral safety switch which automatically "trips" the circuit breakers when the cover is removed. **Never** remove the cover in an explosive atmosphere. Make certain incoming power is **OFF** and **LOCKED OUT**.

- The motor is thermally protected by a thermostat within the stator. In the event of motor overheating, the thermostat will open and automatically "trip" the control box circuit breakers. The motor will not restart until the circuit breakers are reset.

NOTE

If the circuit breaker trips, do not reset it immediately. Wait at least ten minutes before resetting the control handle back to the ON position. If the overload unit continues to trip, operational problems exist.
See **TROUBLESHOOTING**.

PUMP OPERATION

WARNING

This pump is designed to handle non-flammable liquids encountered in mine dewatering. Do not attempt to pump volatile, flammable, or highly corrosive liquids which may damage the pump or endanger personnel as a result of pump failure.

Liquid Temperature And Overheating

The **maximum** liquid temperature for this pump is 120°F. Do not apply it at a higher operating temperature.

WARNING

Approach the pump cautiously after it has been running. Although the motor is cooled by the liquid being pumped, normal operating temperatures can be high enough to cause burns. The temperature will be especially high if operated against a closed discharge valve. Never operate against a closed discharge valve for long periods of time.

Checking Pump Rotation

WARNING

Do not open the control box in an explosive atmosphere. When sealed, the control box is explosion proof to prevent the ignition of combustible gases. Opening the box in an explosive atmosphere could result in fire or explosion.

Check the direction of pump rotation before operation to ensure that the impeller is rotating in the correct direction.

Suspend the pump from the hoisting bail. Turn it on momentarily and note the direction of twist. For correct rotation and operation, the twist must be in the **counterclockwise** direction when viewed from the **top**.

CAUTION

Secure the pump during rotation check to prevent coiling of the power cable.

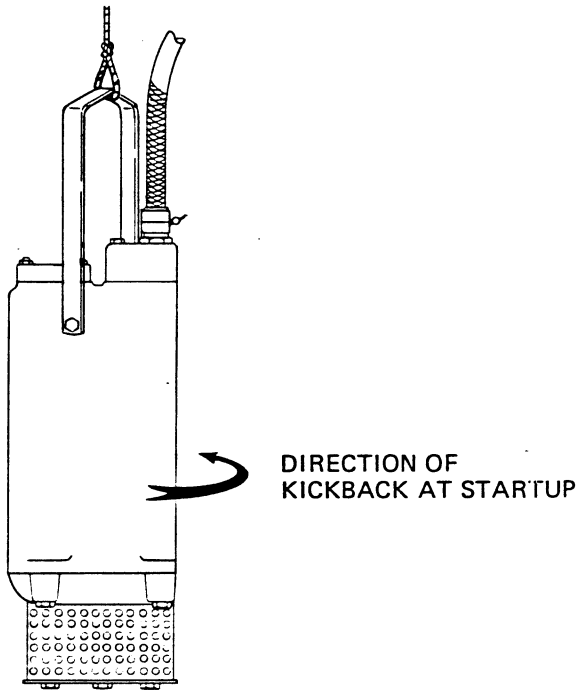

Figure 1. Checking Pump Rotation

If the pump twists clockwise on start, interchange any two motor leads at the control box.

WARNING

The electrical power used to operate this pump is high enough to cause injury or death. Make certain that incoming power is OFF and LOCKED OUT before interchanging motor leads.

STARTING

After the pump and control box have been installed, start the pump as follows.

NOTE

Before actual operation, check the direction of impeller rotation to ensure that the pump is properly wired. See **Checking Pump Rotation** in **OPERATION** section.

CAUTION

Never start the pump more than 6 times per hour. If the motor does not cool between starts, it will overheat resulting in damage to the motor windings shaft bearings or control box.

If an electric motor is used to drive the pump, remove V-belts, couplings, or otherwise disconnect the pump from the motor before checking motor rotation. Operate the motor independently while observing the direction of the motor shaft, or cooling fan.

If rotation is incorrect on a three-phase motor, have a qualified electrician interchange any two of the three phase wires to change direction. If rotation is incorrect on a single-phase motor, consult the literature supplied with the motor for specific instructions.

STOPPING

To stop pump operation, turn the control handle OFF, thereby opening the circuit breaker.

This **does not** terminate incoming power through the field wiring connected to the control box.

After stopping the pump, be sure to perform all required maintenance and preservation procedures.

NOTE

It is recommended that a check valve or throttling valve be installed in the discharge line if there is any possibility of siphoning or back flow when the pump is shut off.

Operation Checks

Check the pump for proper operation when it is first started and periodically thereafter to identify minor problems.

Check the pump for unusual noises or excessive vibration while it is operating. If noise or vibration is excessive, stop the pump and refer to the troubleshooting chart for possible causes.

Check the pump strainer screen for clogging caused by stones, sticks, or other debris. Clean the strainer screen when required. In some cases, stopping the pump momentarily may back flush the strainer screen, purging most of the debris from it. If this fails to clean the screen, remove the pump from the sump and remove the debris manually. See **PUMP DISASSEMBLY**.

Check the pump for overheating. The pump could overheat if operated against a closed discharge valve, or subjected to repeated start cycles.

Cold Weather Preservation

In freezing temperatures, the pump will not freeze as long as it is submerged in liquid. If the pump casing is not submerged, or if the liquid begins to freeze, remove the pump from the sump or wet well and allow it to dry thoroughly. Run the pump for two or three minutes to dry the inner walls.

If the pump freezes, move it into a warm area until completely thawed, or submerge it into the liquid. If the liquid is near freezing, the pump must be submerged for an extended period of time. Start the pump and check for shaft rotation. If still frozen, allow additional thawing time before attempting to restart.

WARNING

Do not attempt to thaw the pump by using a torch or other source of flame. This could damage gaskets or heat the oil within the pump above the critical point and cause the pump to rupture or explode.

TROUBLESHOOTING - SECTION D

WARNING

The electrical power used to operate this pump is high enough to cause injury or death. Obtain the services of a qualified electrician to troubleshoot, test and/or service the electrical components of this pump.

Many of the probable remedies listed in the troubleshooting chart below require use of electrical test instruments; for specific procedures, see **Electrical Testing** at the end of the troubleshooting chart.

TROUBLESHOOTING CHART

TROUBLE	POSSIBLE CAUSE	PROBABLE REMEDY
PUMP FAILS TO START, CIRCUIT BREAKER NOT TRIPPED	Power source incompatible with control box.	Correct power source.
	No voltage at line side of circuit breaker.	Check power source for blown fuse, open circuit breaker, broken lead, or loose connection.
	Open circuit in motor windings or power cable.	Check continuity.
	Defective motor power cable.	Replace cable.
	Motor defective.	Check for and replace defective unit.
CIRCUIT BREAKER TRIPS	Low or high voltage, or excessive voltage drop between pump and control box.	Measure voltage at control box. Check that wiring is correct type, size, and length. (See Field Wiring Connection, Section B).
	Defective insulation in motor windings or power cable; defective windings.	Check insulation resistance; check continuity.

TROUBLESHOOTING

TROUBLE	POSSIBLE CAUSE	PROBABLE REMEDY
CIRCUIT BREAKER TRIPS	Impeller jammed due to debris or insufficient clearance.	Disassemble pump and check impeller.
	Bearing(s) frozen.	Disassemble pump and check bearing(s).
MOTOR RUNS, BUT PUMP FAILS TO DELIVER RATED DISCHARGE	Discharge head too high.	Reduce discharge head, or install staging adaptor and additional pump.
	Low or incorrect voltage.	Measure control box voltage, both when pump is running and when shut off.
	Discharge throttling valve partially closed; check valve installed improperly.	Open discharge valve fully; check piping installation.
	Discharge line clogged or restricted; hose kinked.	Check discharge lines; straighten hose.
	Liquid being pumped too thick.	Dilute liquid if possible.
	Strainer screen or impeller clogged.	Clear clog(s). Stop pump; back flow may flush away debris.
	Insufficient liquid in sump or tank.	Stop pump until liquid level rises.
	Worn impeller vanes; excessive impeller clearance.	Check impeller and clearance. See PUMP END REASSEMBLY.
	Pump running backwards.	Check direction of rotation and correct by interchanging any two motor leads at control box. (See Pump Rotation, Section C).

TROUBLESHOOTING

TROUBLE	POSSIBLE CAUSE	PROBABLE REMEDY
PUMP RUNS WITH EXCESSIVE NOISE OR VIBRATION	Pumping entrained air.	Check liquid level in sump; check position of pump and liquid level sensing device(s).
	Damaged or unbalanced impeller.	Replace impeller.
	Discharge piping not properly supported.	Check piping installation.
	Impeller jammed or loose.	Check impeller.
	Motor shaft or bearings defective.	Disassemble pump and check motor and bearings.
	Pump cavitation.	Reduce discharge head, or restrict flow on low head applications.

ELECTRICAL TESTING

If you suspect that pump malfunctions are caused by defects in the motor, power cable or control box, perform the following checks to help isolate the defective part.

WARNING

The electrical power used to operate this pump is high enough to cause injury or death. Obtain the services of a qualified electrician to troubleshoot, test and/or service the electrical components of this pump.

CAUTION

Be certain to refer to the wiring diagram(s) in the INSTALLATION section of this manual before reconnecting any electrical components which have been disconnected.

Test Equipment

A volt/amp/ohmmeter and megohmeter of adequate range and quality will be required to conduct the following electrical tests. The suggested equipment indicated below is commercially available, or an equivalent substitute may be used.

Equipment	Manufacturer	Use
Amprobe Model 300 or Amprobe, Jr.	Pyramid Instrument Corp. Lynbrook, NY	To check AC Voltage and current (amperage)
Megohmer	Herman H. Sticht Co. 25 Bark Place New York, N.Y.	To measure resistance (ohms) to ground

Voltage Imbalance

Each phase of the incoming three-phase power must be balanced with the other two as accurately as a commercial voltmeter will read. If the phases are balanced, check out the motor as described below. If the phases are out of balance, contact your power company and request that they correct the condition.

a. Use a voltmeter, Amprobe, or equivalent meter to read the voltage across terminals 1 & 2, 2 & 3, and 1 & 3 in the control box. All three measured voltages must be the same, as accurately as the meter will read. If possible, measure the voltage with the pump off, with the pump running but out of the water, and with the pump running in the water at full load. All the measured voltages at each condition must be the same.

b. Use an Amprobe or equivalent meter to measure the current draw of each phase while the pump is running at full load and at no load. All three amperage readings must be the same at each condition, as accurately as the meter will read. Nominal amperage values are listed in Table 1, but these apply only when the actual voltage at the site is the nominal voltage listed.

c. If the voltages are balanced with the pump off, but are unbalanced when the pump is running, a thorough check of the power source, all interconnecting cables, and the pump motor is required to isolate the defect.

Motor And Motor Power Cable Continuity

To check continuity, zero-balance the ohmmeter set at the RX1 scale, and test as follows:

a. Disconnect the motor power cable leads from the control box and connect the test leads to any two of the three power cable leads (not to the green ground lead or yellow ground check lead). If there is a high resistance reading on the ohmmeter, there is an open or broken circuit caused by a break in the power cable or motor windings, or by a bad connection between the motor and the power cable. Switch one test lead to the third power lead, and test again.

b. If an open or broken circuit is indicated, check the power cable for obvious damage, and replace as necessary (see **MAINTENANCE AND REPAIR**). If there is no apparent damage to the motor cable, remove the terminal housing (see **MAINTENANCE AND REPAIR**) and check the continuity of each power cable lead at the terminal posts.

c. If an open circuit still exists after each lead (terminal) has been tested and tightened, then the **entire** motor power cable must be replaced. Splicing or other means of repair are not recommended.

d. If no break is found in the power cable, check the motor leads for continuity. If the test reading indicates an open or broken circuit, there is an open circuit in the motor.

NOTE

It is recommended that a pump with a defective motor be returned to Gorman-Rupp, or to one of the Gorman-Rupp authorized Submersible Repair Centers.

Insulation Resistance

To check insulation, zero-balance the ohmmeter set at the RX100K scale, and test as follows:

a. Disconnect the motor power cable leads from the control box. Connect one test lead to the power cable green ground lead, and touch the other test lead to each of the three power leads in turn.

b. The reading obtained will indicate resistance values in both the power cable and the motor windings. If the resistance reading is infinity (∞), the insulation is in good condition. If the reading is between infinity (∞) and 1 megohm, the insulation is acceptable but should be rechecked periodically. If the reading is less than 1 megohm, the insulation should be checked more closely; a reading of zero indicates that the power cable or the motor is grounded.

c. To determine whether the power cable or the motor is grounded, remove the terminal housing (see MAINTENANCE AND REPAIR), disconnect the motor leads from the motor terminals, and test the power cable leads and motor leads separately.

MAINTENANCE AND REPAIR - SECTION E

MAINTENANCE AND REPAIR OF THE WEARING PARTS OF THE PUMP WILL MAINTAIN PEAK OPERATING PERFORMANCE.

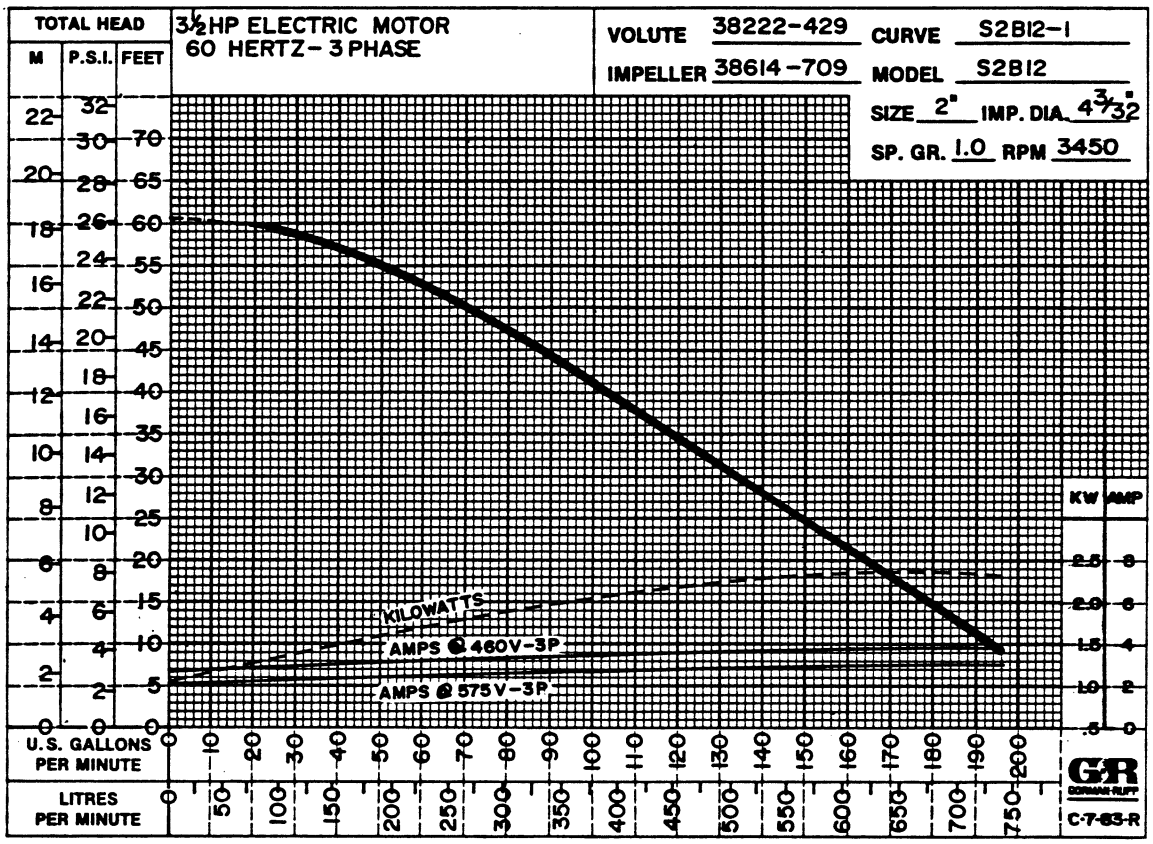

*STANDARD PERFORMANCE FOR PUMP MODEL S2B12-575V 3P

*Based on 70°F clear water at sea level. Since pump installations are seldom identical, your performance may be different due to such factors as viscosity, specific gravity, elevation, temperature, and impeller trim.

If your pump serial number is followed by an "N", your pump is NOT a standard production model. Contact the Gorman-Rupp Company to verify performance or part numbers.

SECTIONAL DRAWING

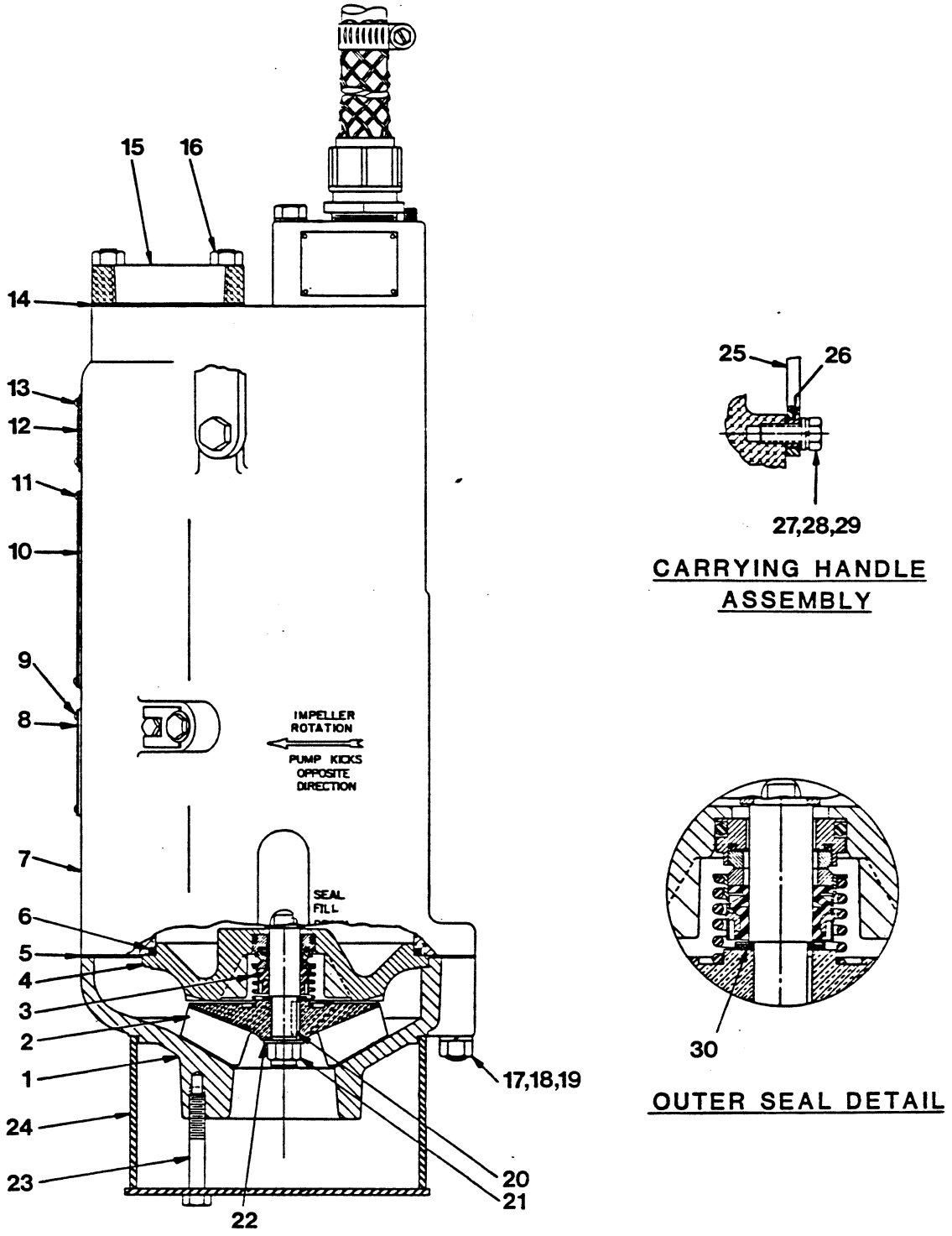

Figure 1. Pump Model S2B12-575V 3P

PARTS LIST
Pump Model S2B12 575V 3P
(From S/N 785601 up)

ITEM NO.		PART NAME	PART NUMBER	MATL CODE	QTY
1		SUCTION CASING	38222-429	10010	1
2	*	IMPELLER	38614-709	14160	1
3	*	SEAL ASSY	46512-036	-----	1
4		SEAL PLATE	38272-830	10010	1
5	*	CASING GASKET	38674-807	20000	1
6	*	O-RING	25152-250	-----	1
7		SUBMERSIBLE MOTOR ASSY	47111-101	-----	1
8		PENN DOER APPL PLT	2613-FL	17020	1
9		DRIVE SCREW	BM#04-03	17000	4
10		MSHA PLATE	2613-ES	17020	1
11		DRIVE SCREW	BM#04-03	17000	4
12		NAME PLATE	2613-DD	17020	1
13		DRIVE SCREW	BM#04-03	17000	4
14	*	FLANGE GASKET	10195-G	20000	1
15		DISCHARGE FLANGE	10195	13040	1
16		HEX NUT	D05	15991	4
17		STUD	C10	17000	4
18		LOCKWASHER	J06	17000	4
19		HEX NUT	D06	17000	4
20	*	KEY	N0202 1/2	17000	1
21	*	IMPELLER NUT	D06	17000	1
22	*	FLAT WASHER	21161-808	15991	4
23		NYLOCK CAPSCREW	BT0508	15991	4
24	*	STRAINER ASSY	46611-004	2415V	1
25		HANDLE	10185-A	1502V	1
26		BUSHING	10194	15071	2
27		HEX HD CAPSCREW	B0604	15991	2
28		LOCKWASHER	J06	15991	2
29		FLAT WASHER	K06	15991	2
30	*	ADJUSTING SHIM SET	669	14990	1
NOT SHOWN:					
		CONTROL BOX - 575 VOLT	47631-005	-----	1
		1 QT. TRANSFORMER OIL	9568	-----	1
OPTIONAL:					
	*	REPAIR GASKET SET	11000-T	-----	1
		STAGING ADAPTOR	10195	13040	1
		SST. STRAINER	46611-005	24170	1
		SST. IMPELLER	38614-709	17180	1
		3" DISCHARGE ADAPTOR	38641-032	13040	1

*INDICATES PARTS RECOMMENDED FOR STOCK

Above Serial Numbers Do Not Apply To Pumps Made In Canada.

CANADIAN SERIAL NO. ..... AND UP

SECTIONAL DRAWING

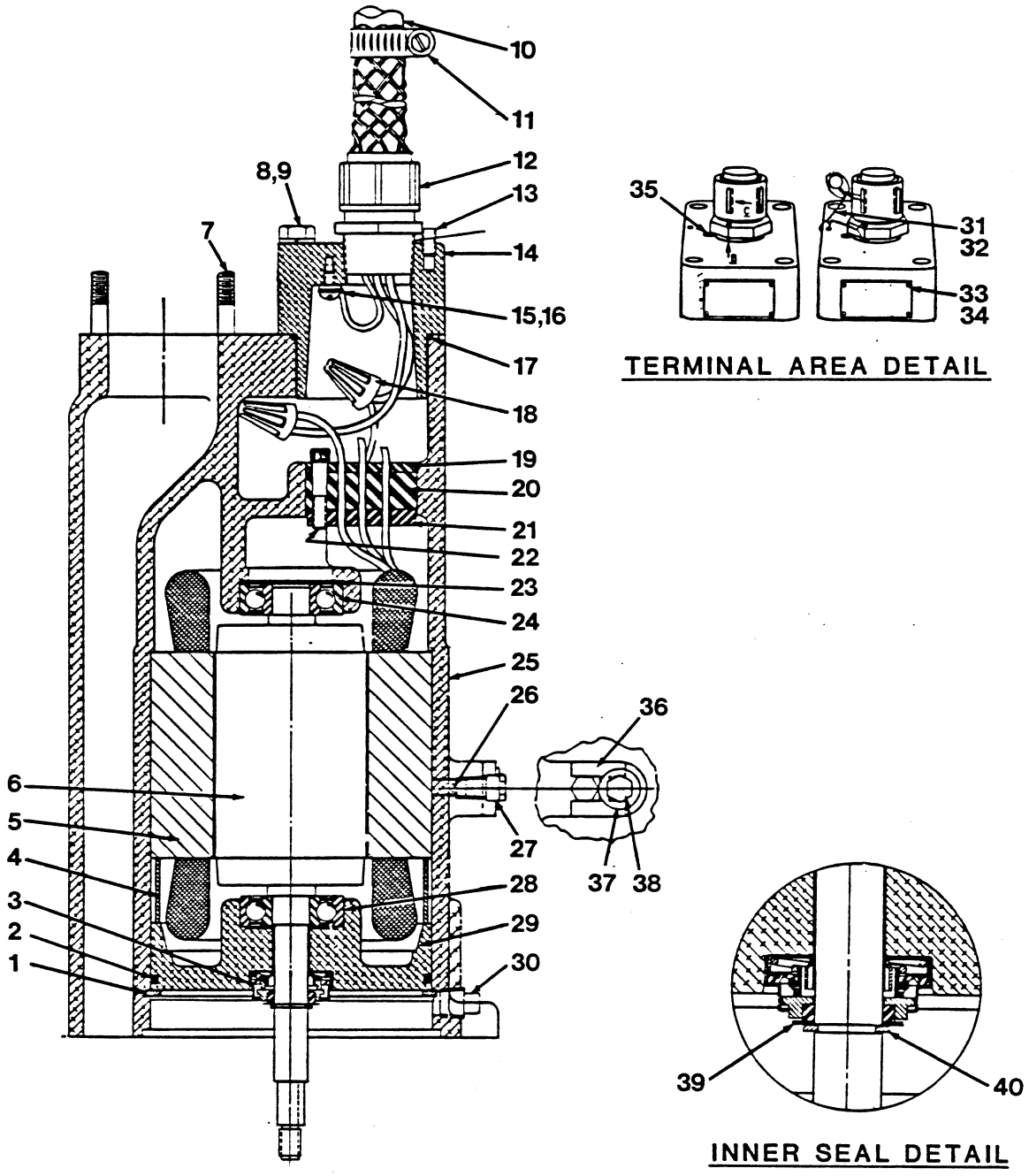

Figure 2. 47111-101 Submersible Motor Assy

PARTS LIST
47111-101 Submersible Motor Assy

ITEM NO.		PART NAME	PART NUMBER	MATL CODE	QTY
1	*	RETAINING RING	24121-077	-----	1
2	*	O-RING	25152-248	-----	1
3	*	SEAL ASSY	25276-011	-----	1
4		MOTOR BUSHING	31134-060	23010	1
5	*	STATOR	47113-806	-----	1
6	*	ROTOR	47112-801	-----	1
7		STUD	C0506	15991	4
8		HEX HD CAPSCREW	21632-565	-----	4
9		LOCK WASHER	J05	15991	4
10	*	50 FT. CABLE ASSY	47351-011	-----	1
11		HOSE CLAMP	26518-666	-----	1
12	*	CABLE GRIP ASSY	27111-016	-----	1
13		ALLEN HD SETSCREW	GA0402	15991	1
14		TERMINAL HOUSING	38381-205	13040	1
15		T-TYPE LOCK WASHER	AK#10	15991	2
16		RD HD MACHINE SCREW	X#10-01 1/2	14990	2
17	*	O-RING	25154-141	-----	1
18		CONNECTOR	S1718	-----	5
19		TERMINAL PLATE, UPPER	13880	23010	1
20		MOTOR LEAD BUSHING	31281-017	19140	1
21		TERMINAL PLATE, LOWER	13881	23010	1
22		SOCKET HD CAPSCREW	13879	15990	4
23		SPRING WASHER	S1554	-----	1
24	*	BALL BEARING	23282-004	-----	1
25		MOTOR HOUSING	38311-017	13040	1
26		ALLEN HD SETSCREW	GA0501 1/4	15990	1
27		PIPE PLUG	38649-022	17030	1
28	*	BALL BEARING	23282-004	-----	1
29		INTERMEDIATE BRACKET	38261-016	13040	1
30		PIPE PLUG	P04	17000	1
31	*	LEAD SEAL	21188-002	-----	2
32	*	WIRE	31311-004	17990	2
33		CERTIFICATION PLATE	2613-GX	17020	1
34		DRIVE SCREW	BM#04-03	17000	4
35		ALLEN HD SETSCREW	GA0401	15991	1
36		LOCK CLIP	33645-008	17030	1
37		FLAT WASHER	KB04	17000	1
38		NYLOCK CAPSCREW	BT0403	17000	1
39	*	ADJUSTING SHIM SET	513-A	17090	1
40		SNAP RING	S668	-----	1
NOT SHOWN:					
	*	WATER PROOF TAPE	18666-068	-----	1

*INDICATES PARTS RECOMMENDED FOR STOCK

PUMP AND MOTOR DISASSEMBLY AND REASSEMBLY

All functions performed by the customer on the pump or control must be done in accordance with MSHA, schedule 2G regulations to ensure the explosion proof integrity. No alterations of original design may be made without the consent of the Gorman-Rupp Company and MSHA.

The following maintenance and repair instructions are keyed to the sectional views (see Figures 1 and 2) and the accompanying parts lists.

WARNING

The electrical power to operate this pump is high enough to cause injury or death. Make certain that the control handle on the control box is in the OFF position and locked, or that the power supply to the control box has been otherwise cut off and locked out, before attempting to open or service the pump assembly. Tag electrical circuits to prevent accidental start-up.

WARNING

Do not remove the control cover in an explosive atmosphere. When sealed, the control box is explosion proof to prevent the ignition of combustible gases. Opening the box in an explosive atmosphere could cause fire or explosion.

Before attempting to service the pump or control, cut off the power supply to the control box. Close the valve in the discharge line, if used.

Use the hoisting bail to remove the pump from the wet well or sump and move it to a location where the discharge line can be removed.

Select a suitable location to perform the degree of maintenance required, preferably indoors. If the motor housing is to be opened, the work must be done in a clean well equipped shop. All maintenance functions must be done by qualified personnel.

WARNING

Do not attempt to lift the pump by the motor power cable or the piping. Attach proper lifting equipment to the lifting device fitted to the pump. If chains or cable are wrapped around the pump to lift it, make certain that they are positioned so as not to damage pump, and so that the load will be balanced.

Check the chart in "**TROUBLESHOOTING**" to determine the nature of the pump problem. If the problem is mechanical in nature, such as worn pump parts, seal replacement, lubrication, etc., refer to **PUMP END DISASSEMBLY** for instructions.

If the problem is electrical, complete disassembly may not be required. Refer to **Electrical Testing** and have a qualified electrician check out control box, cable and terminal housing assembly. If problem is determined to be in the motor, proceed with **PUMP END DISASSEMBLY** followed by **MOTOR DISASSEMBLY**. Otherwise, see **Control Box and Terminal Housing And Power Cabie Disassembly**.

All gaskets and most O-rings **must** be replaced if disturbed. A repair gasket kit is listed on the parts list as an option.

PUMP END DISASSEMBLY

Strainer Disassembly

(See Figure 1)

To remove the strainer assembly (24) raise the pump slightly, or lay it on its side and disengage the strainer capscrews (23). If the impeller is clogged, the debris can probably be removed without further disassembly.

Draining Oil From Seal Cavity

(See Figure 2)

CAUTION

> Let the pump cool before removing the seal cavity drain plug. Pressure built up within a hot pump could cause the oil to spray out when the plug is removed. Remove the plug slowly and permit pressure to vent to atmosphere.

With the pump in a vertical position, clean any dirt from around the seal cavity drain plug (30). Remove the plug and drain the seal oil into a **clean** container. Inspect it for water, dirt or cloudy condition which could indicate lower seal failure or poor gasket seal.

Positioning Pump For Disassembly

(See Figure 2)

It is recommended that the pump be positioned upside down during disassembly. To hold the pump in the inverted position, screw a pipe in the discharge flange and clamp it in a large vise, or secure the discharge studs (7) to a bench or work stand. Be careful not to damage the terminal housing (14) or cable (10) while in this position. Use adequate equipment and personnel to safety handle the pump until it is secured. If inverting the pump is not practical, lay the pump on its side and secure it.

Impeller Disassembly

Remove the nuts (19) and lockwashers (18) that secure suction casing (1) to the motor housing (7). Pull off the suction casing and remove and discard gasket (5).

Wedge a piece of wood between one of the vanes of impeller (2) and a stud (17) to prevent shaft rotation. Unscrew the impeller nut (2) and remove the flat washer (22). Pry off the impeller using two screwdrivers as shown in Figure 3 and remove key (20).

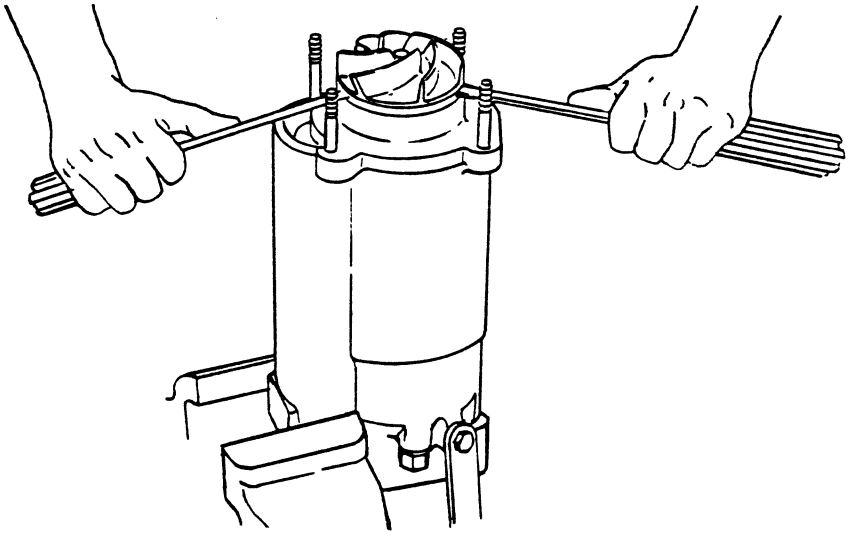

Figure 3. Removing Pump Impeller

Outer Seal Disassembly

(See Figure 1 and 5)

Carefully remove the loose parts of outer shaft seal (3). Tie and tag shims (30) or measure and record their thickness to facilitate reassembly. The mating surfaces of the rotating and stationary elements are precisioned finished. The complete seal should be replaced with each overhaul. If the old seal is must be reused, wrap the seal faces individually in tissue paper to prevent damage to the sealing surfaces.

Pull off the seal plate (4) and remove O-ring (6). If the seal is being replaced, push out the shaft seal stationary seal seat from the bore in the seal plate.

Inner Seal Disassembly

(See Figure 2 and 4)

Remove the retaining ring (40) and pull off shims (39). Tie and tag the shims, or measure and record their thickness to facilitate reassembly. Use a screwdriver to pry out seal assembly (3). No further disassembly is required. Do not discard retaining ring (40) or shims (39). Discard and replace the seal assembly if possible. Reuse of the seal is not recommended.

If no further disassembly is required, proceed to **PUMP END REASSEMBLY**.

NOTE

If the motor housing components are to be serviced, see **MOTOR DISASSEMBLY** in this section. Do not reassemble the pump end components at this time.

PUMP END REASSEMBLY

NOTE

Reuse of old O-rings, gaskets, or shaft seal parts may result in premature leakage or reduced pump performance. It is strongly recommended that an overhaul gasket kit and shaft seal assembly be used during reassembly. (See the parts list for numbers.)

Cleaning And Inspection Of Pump Parts

Carefully inspect any O-rings or gaskets before removal and cleaning to determine if a proper seal and compression existed prior to disassembly. If sealing

was faulty or questionable, the cause must be determined and corrected before reassembly. Replace any parts as required.

Thoroughly clean all reuseable parts using commercial cleaning solvent, diesel fuel or kerosene. Remove all O-rings and gaskets and clean the sealing surfaces of dirt or gasket material. Be careful not to scratch gasket surfaces.

WARNING

Most cleaning solvents are toxic and flammable. Use them only in a well-ventilated area free from excessive heat, sparks, and flame. Read and follow all precautions printed on solvent containers.

Use a clean cloth lightly dampened with solvent to clean the lower end of the motor housing, intermediate, and seal cavity. **Do not** allow the solvent to seep into the motor.

Inspect the rotor shaft for damaged threads, scoring, or nicks. Remove nicks and burrs with a fine file or hand honing stone to restore original contours. If the shaft is bent or severely damaged, the rotor and shaft must be replaced as an assembly. See **MOTOR DISASSEMBLY**

If the shaft seal faces are scratched, or visibly worn, replace the entire shaft assembly. Individual parts are not replaceable and can not be repaired without special equipment.

Inner Seal Reassembly

(See Figure 2 and 4)

NOTE

Handle seal parts with care to prevent nicking or scratching the seal faces. The seal rings should be handled by the edges only since even fingerprints on the precision finished faces can shorten seal life.

If a new seal is to be installed, do not unwrap it until time of installation. Cleanliness of seal components is critical, especially the seal faces.

Clean the rotor shaft and seal cavity area of the intermediate (29). Be sure the area is dry and free of lint and dirt. Do not permit cleaning solvent or debris to fall into the motor cavity.

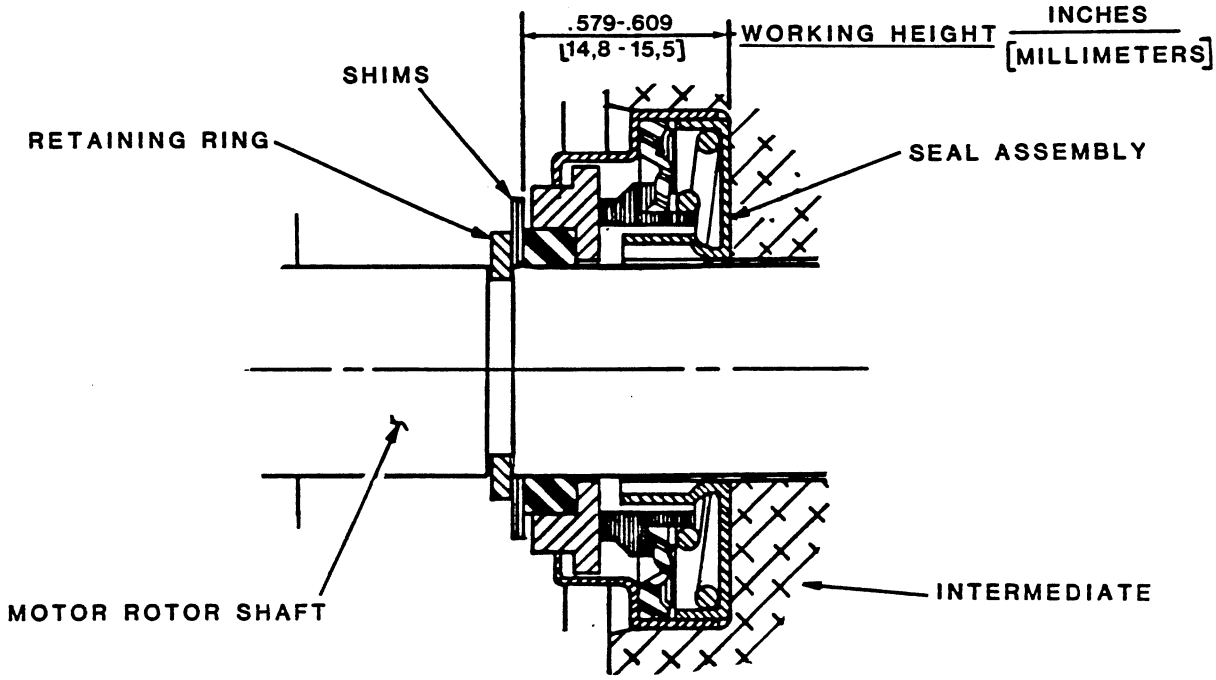

Figure 4. Inner Seal Assembly 25276-011

Select the required combination of shims (39) to obtain a seal working height of 0.579 to 0.609 inches as shown in Figure 4. This distance is measured from the bottom of the bore in intermediate (29) to the motor side of shims (39) when the retaining ring (40) is installed.

CAUTION

> Press only on the outer edge of the seal assembly to prevent damage to polished surfaces of rotating and stationary seal faces.

Lubricate the shaft and the outer edge of the seal assembly with petroleum jelly and press it into the intermediate bore using a sleeve or drift pin which contacts **only** the outer metal edge. Exert even pressure around the metal edge to prevent cocking or damage. When the seal assembly is bottomed in the bore, install shims and retaining ring (40). Make sure all parts are seated properly.

Seal Plate Reassembly

(See Figure 1)

Thoroughly clean the seal plate (4) O-ring groove, and stationary seal seat bore. The seal seat bore must be free of burrs and nicks which could damage the seal seat O-rings.

Coat the O-ring (6) with petroleum jelly and install it on the seal plate pilot. Press the seal plate into the motor housing until fully seated. Be careful not to damage the O-ring.

Outer Seal Reassembly

(See Figure 1 and 5)

NOTE

> The required thickness of impeller adjusting shims should be determined before installing the outer seal. The impeller and locking hardware must be installed to perform this operation, refer to **Impeller Reassembly And Adjustment.**

Do not unwrap the seal until time of installation. Cleanliness of seal components is critical, especially the seal faces.

Be sure the bore in the seal plate (where the stationary seat fits) and rotor shaft are clean, dry, and free of dirt or lint. Inspect the bore for burrs or nicks that might cut the seal O-ring or prevent a good seal.

Unpack the stationary seal seat, taking care not to touch sealing faces. Apply a light coating of petroleum jelly to the seal seat bore and O-ring. Keep the sealing faces dry. Be certain the drive grooves of the stationary element are properly fitted into the drive lugs in the stationary seat.

NOTE

> Handle seal parts with care to prevent nicking or scratching the seal faces. The seal rings should be handled by the edges only since even fingerprints on the precision finish can shorten seal life.

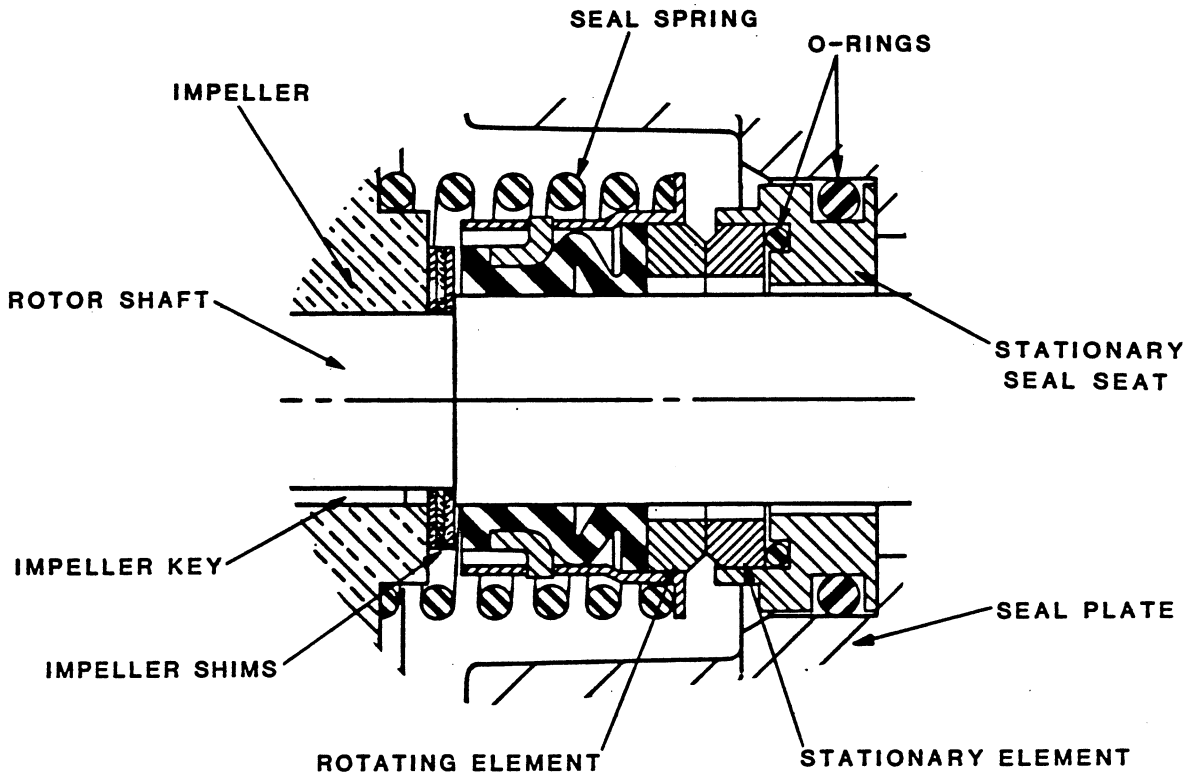

Figure 5. Outer Seal Assembly 46512-036

Position the seat in the bore with the sealing face up and cover it with a clean tissue. Use your thumbs to press the seat into the bore. Apply equal pressure on opposite sides of the seat until it contacts the bore shoulder. Remove the tissue and check the sealing face to ensure that it is clean and dry. If cleaning is necessary, use **clean** tissue to wipe lightly in a concentric pattern.

Unpack the rotating portion of the seal. Be certain the sealing face is free of grit or surface damage. Assemble the drive grooves of stationary element into the drive lugs in the bellows retainer.

If the rotating element does not stay in the bellows retainer when turned upside down, place a small amount of grease at equal spaces on the **back** of the element and position it into bellows retainer. The grease should hold the element into the drive lugs until the seal is installed.

Apply a light coating of petroleum jelly to the shaft and I.D. of the bellows. Place the rotating seal portion on shaft with seal face down. Apply firm, steady pressure, with clean hands, on the seal retainer until it slides down the shaft and makes contact with the stationary seal.

Slide the seal spring over the shaft and bellows retainer. See Figure 5 for proper order of seal assembly.

Impeller Reassembly

(See Figure 1)

Inspect the impeller (2), and replace if cracked or badly worn. Clean the threads on the rotor shaft to remove any old thread locking material.

Install the same thickness of impeller shims (30) as previcusly removed onto the rotor shaft. Install the key (20), and impeller (2), and flat washer (22).

After the impeller has been installed, coat the threads of the rotor shaft with 'Loctite Threadlocker No. 242' or equivalent compound, and torque the impeller nut to 20 ft. lbs. (240 in. lbs.).

Install the suction casing (1) with a new gasket (5). Secure the suction casing by tightening the four nuts and lockwashers (18 and 19) in an alternating pattern.

A clearance of .010 to .015 inch between the impeller and the suction casing is recommended for maximum pump efficiency. Use a feeler gauge to measure this clearance, and add or remove impeller adjusting shims until the gap falls within the recommended limits. Turn the shaft to check for free impeller rotation.

Strainer Reassembly

(See Figure 1)

Inspect the strainer screen for cracks or broken welds. Straighten or reweld as required. Inspect the studs in the motor housing for stripped threads and other damage. Replace and retighten before reassembly.

Install the strainer screen (24) and secure it with four capscrews (33). Tighten the capscrews just enough to draw the strainer screen down tightly, but not tight enough to distort it.

See **LUBRICATION** and **FINAL ASSEMBLY** before putting the pump back into service.

MOTOR DISASSEMBLY

Disassembly of the motor is rarely required except to replace the motor rotor, stator, bearings, or intermediate. Do not disassemble the motor unless it is necessary and a clean well-equipped shop is available.

NOTE

It is recommended that a pump with a defective motor be returned to Gorman-Rupp, or to one of the Gorman-Rupp authorized Submersible Repair Centers.

CAUTION

Perform repairs in accordance with MSHA specifications regarding repairs affecting the permissibility of this equipment. Refer to INSTALLATION, Page B-1.

WARNING

The electrical power to operate this pump is high enough to cause injury or death. Make certain that the control handle on the control box is in the OFF position and locked, or that the power supply to the control box has been otherwise cut off and locked out, before attempting to open or service the pump assembly. Tag electrical circuits to prevent accidental start-up.

WARNING

Do not remove the control box cover in an explosive atmosphere. When sealed, the control box is explosion proof to prevent the ignition of combustible gases. Opening the box in an explosive atmosphere could cause fire or explosion.

Carefully inspect any O-rings or gaskets before removal and cleaning to determine if a proper seal and compression existed prior to disassembly. If sealing was faulty or questionable, the cause must be determined and corrected before reassembly. Replace any parts as required.

Terminal Housing/Power Cable Disassembly

(See Figure 2)

The pump power cable leads are connected to motor stator leads inside the terminal housing. Removal is not required except to check or replace the power cable, or to disassemble the motor.

WARNING

Do not remove the terminal housing in an explosive atmosphere. The terminal housing and its O-ring must remain intact to retain the permissibility of this equipment. Removing the housing in an explosive atmosphere could cause fire or explosion.

Remove the capscrews and lockwashers (8 and 9) which secure terminal housing (14) to the motor housing (25). Pull off the terminal housing. Cut or unwrap the tape, then remove connectors (18) to disconnect the pump power cable leads from the motor leads. Remove O-ring (17) from the motor housing. No further disassembly is required to test the stator or power cable.

Remove the screws and lockwashers (15 and 16) to disconnect the green ground lead and the yellow ground check lead from the terminal housing.

If the pump power cable must be replaced, cut and remove the seal wire which retains cable grips (12) to the terminal housing and unscrew the cable grip nut. Pull the pump power cable from the cable grip.

If the motor is to be disassembled, remove four socket head screws (22). Pull out the assembled plates (19 and 21) and motor lead bushing (20) from the bore in the motor housing. Pull the plates and bushing from the motor leads.

Rotor Disassembly

(See Figure 2)

See **PUMP END DISASSEMBLY**, and remove all pump end and seal components.

With the pump end disassembled and the terminal housing removed, secure the pump in an inverted position. To facilitate disassembly, remove the handle from the motor housing.

Use a large snap ring pliers to remove the retaining ring (12) which retains the intermediate in the motor housing. See Figure 6.

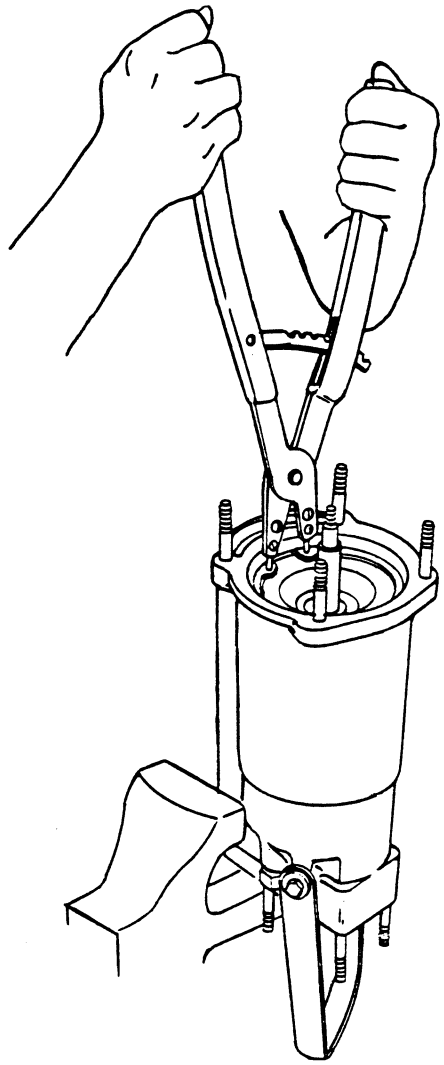

Figure 6. Removing Intermediate Retaining Ring

Pull out the assembled intermediate (29) and motor rotor shaft (6). Withdraw the rotor carefully to prevent damage to the stator. Pull out the wavy spring washer (23) if it was not removed with the rotor.

Pull off the intermediate and remove the O-ring (2). Do not remove the bearings (28) from the rotor shaft unless they are defective.

Stator Disassembly

Do not remove the stator (5) unless it is defective (windings open, winding insulation resistance low, or stator core damaged). If the stator is to be removed, pull out the motor bushing (4) and disengage the hardware (37 and 38). Remove the pipe plug (27) and setscrews (26) underneath, and carefully pull the stator from the motor housing.

CAUTION

Do not attempt to rewind the stator. Winding tolerances and materials are closely controlled by the manufacturer, and any deviation can cause damage or operating problems. Replace the stator, or return it to one of The Gorman-Rupp Authorized Submersible Repair Centers or The Gorman-Rupp factory, if defective.

MOTOR REASSEMBLY

NOTE

Reuse of old O-rings, gaskets, shaft seal parts may result in premature leakage or reduce pump performance. It is strongly recommended that an overhaul gasket kit and shaft seal assembly be used during reassembly. (See the parts list for numbers.)

Stator Reassembly

(See Figure 2)

Clean all gasket and O-ring surfaces completely removing any old gasket and cement material. Inspect the sealing surfaces for burrs, nicks and pits which could cause a poor seal. Replace parts as required.

Thoroughly clean the inside of the motor housing (25) with fresh solvent. The interior **must** be dry and free of dirt or lint.

Do not unpack the stator until the motor housing has been prepared for stator installation. The stator **must** be kept clean and dry. When handling stator, do not set it on the end windings. Lay it on its side and block it from rolling.

WARNING

Most cleaning solvents are toxic and flammable. Use them only in a well-ventilated area free from excessive heat, sparks, and flame. Read and follow all precautions printed on solvent containers.

Test the new stator as indicated in **Electrical Testing** in **TROUBLESHOOTING** to ensure that no damage has occurred during transit or handling.

Slide a clean plastic or cardboard sleeve over the stator leads, or tape them together to protect them during installation. Align the stator leads with the terminal opening and carefully push the stator into the motor housing until it bottoms. Remove the protective sleeve from the stator leads. Install and tighten the setscrews and check that the stator is locked in place. Apply 'Loctite Pipe Sealant With Teflon #592' on the pipe plug threads and install it over the setscrews. Retain the pipe plug with the lock clip.

Rotor Reassembly

(See Figure 2)

Inspect the rotor for separated laminations or scoring. Check the rotor shaft, particularly the areas adjacent to the seals and bearings, for nicks, scoring, or damaged threads. Replace the shaft and rotor assembly if required.

Rotate the rotor bearings by hand to check for roughness or binding. If required, remove the bearings with a bearing puller or press them from the rotor shaft with an arbor press. Polish the shaft with crocus cloth, and press the new bearings on until fully seated against the shaft shoulders.

Install the motor bushing (4). Coat the intermediate O-ring (2) with petroleum jelly and install it in the groove in the intermediate (29). Install the intermediate on the lower rotor bearing (28), tapping it lightly, if necessary, with a soft-faced hammer.

Install the wavy spring washer (23) in the bottom of the motor housing bearing bore. Carefully install the rotor in the motor housing until the intermediate is below the retaining ring groove. Install the retaining ring (1). See Figure 6.

Terminal Housing/Power Cable Reassembly

WARNING

//
// Power cable MUST be disconnected from the power source. //
//

Clean the exterior of the power cable with warm water and mild detergent, and check for obvious physical damage. Check the cable for continuity and insulation resistance. (See **Electrical Testing** in **TROUBLESHOOTING**.) Do not attempt repairs except to cut off either end of the cable; splicing is not recommended. Reinstall any wire tags or terminals which may have been cut off.

Lubricate the motor leads and each bore in bushing (20) with petroleum jelly. Feed the motor leads through lower plate (21) and push them through the motor lead bushing. When the leads are about 1-1/2 to 2 inches above the top of the bushing, install upper plate (19).

Start two capscrews (22) through the upper plate and bushing and into the tapped holes in the lower plate. Do not tighten the screws. Lubricate the outside of

the bushing and the bore in the upper motor housing with petroleum jelly, and push the assembled plates and bushing into the housing until the upper plate is just flush with the housing.

Install the two remaining capscrews (22). Check that there is enough of the motor leads protruding to permit connection to the pump power cable. Tighten the four capscrews evenly and alternately to 4 ft. lbs. (48 in. lbs.).

Use petroleum jelly to lubricate the outside of pump power cable (10) and the rubber bushing bore in cable grip (12) for ease of assembly. Loosen the cable grip nut and install the cable grip on the pump power cable. Apply 'Loctite Pipe Sealant With Teflon # 592' to the cable grip threads before installation.

Start the cable grip hex body into the terminal housing (14), and feed the pump power cable leads into the terminal housing. Check that there is sufficient cable lead length to permit wire connection, and tighten the hex body.

Connect the green ground lead and the yellow ground check lead to the terminal housing and secure with screws and lockwashers (15 and 16). These two wires must be connected to separate points in the terminal housing. Make sure each terminal makes good contact with the housing.

Install a new O-ring (17) on the terminal housing. Refer to the wiring diagram in Section B, then connect the correct wires with connectors (18). Wrap each connection with underwater tape (part number 18666-068, available from Gorman-Rupp) to seal it and prevent the connector from working loose. Start the tape between the connectors and double back, then stretch the tape and wrap it around the leads and connector. (Be sure the orange and blue cable leads are connected to the red coded stator leads).

Install the terminal housing on the motor housing and secure with capscrews (8) and lockwashers (9). Tighten evenly and alternately around the terminal housing and torque to 11 ft. lbs. (132 in. lbs.).

WARNING

Cable grip must be retained to housing as follows to retain permissibility for this equipment. Failure to seal parts as specified may result in explosion.

Tighten the cable grip and secure it to the terminal housing as follows (see Figure 7):

1. There are two tapped holes in the terminal housing located 90° apart. One hole will be used for installing the long locking setscrews (13), the other will be plugged with the short setscrew (35). Apply 'Loctite Pipe Sealant With Teflon # 592' to **both** setscrews before installation.

   Tighten the cable grip hex body. Note the location of the hole which is blocked by the hex body. Unscrew the hex body until the hole is clear, and install the small setscrew (35).

   Retighten the hex body and install the longer setscrew (13) which locks the body in place.

2. Drill a 1/16-inch diameter hole B in the hex body approximately 45 degrees counterclockwise from hole A in the terminal housing. If the cable grip is being reused, the old hole may be reused if it is in the correct location.

3. Insert the seal wire (32) through hole B and equalize the wire length. Twist the wire ends approximately 10 turns and insert one end of the wire through hole A. Draw tight and twist the wire ends approximately 10 turns.

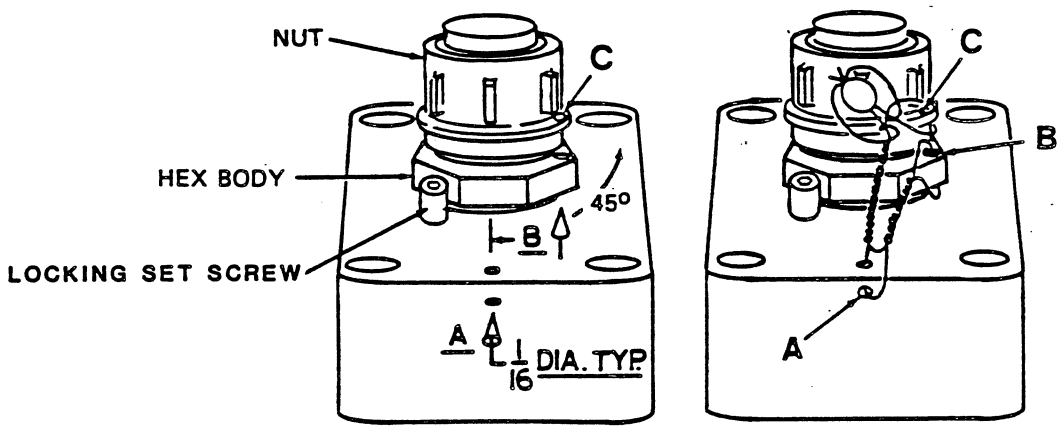

Figure 7. Safety Seal Installation

4. Tighten the cable grip nut. Drill a 1/16-inch diameter hole C through the flange on the cable grip adjacent to hole B in the hex body.

5. Insert one end of the twisted wire through hole C and draw tight. Twist the ends two turns and push them through a lead seal (31).

6. Wrap the ends of the wires once around the twisted length from A to C from opposite directions, and push the wire ends through the lead seal again. Clamp the seal to secure the wire ends.

FINAL ASSEMBLY

(See Figure 1)

If the discharge flange (15) has been removed from the motor housing, replace the discharge flange gasket (14). Apply 'Never-Seez' on the threads and torque the nuts to 11 ft. lbs. (132 in. lbs.).

Connect the discharge hose, and reposition the pump. If rigid piping or long hose is used, reposition the pump then connect the piping.

LUBRICATION

After the first two weeks of operation, and every month thereafter, check the oil condition and its level in the seal cavity.

WARNING

Check oil level only when the pump is cool. If you remove the level plug when the pump is warm or hot, pressure in the seal cavity can cause the hot oil to spray out when the plug is removed.

The grade of lubricant used is critical to the operation of this pump. Use uninhibited transformer oil as specified in Table 2.

Table 2. Pump Oil Specifications

Specifications	
Type	Uninhibited transformer oil
Neutralization	0.01
Dielectric	26,000(min)
Pour point	-55°F
Typical products and suppliers	
Gulf Oil Company	Transcrest H
Texas Oil Company	Texaco 55
Sun Oil Company	Sunoco D Transformer Oil
Westinghouse Electric Company	WEMCO C-2772
General Electric Company	Transil 10C

Seal Cavity

Lay the pump on its side with the level plug up. Screw a short 1/4-inch NPT nipple into the hole and plug the open end with your finger. Tip the pump upright, drain off a small amount of oil into a transparent cup, and lay the pump on its side again. If the oil is cloudy or has water in it, drain the oil as described below. If the oil is clear, remove the nipple, top up the seal cavity with oil, and reinstall the level plug.

If the seal cavity oil is cloudy or has water in it, drain out and discard the oil and inspect the outer shaft seal. Refer to **PUMP DISASSEMBLY**. After inspection or replacement of the seal, refill the seal cavity with oil. Seal cavity capacity is approximately 1 US pint (0.47 liter).

Motor Bearings

The motor bearings are permanently sealed. Periodic lubrication is not required.

For U.S. and International Warranty Information,
Please Visit www.grpumps.com/warranty
or call:
U.S.: 419—755—1280
International: +1—419—755—1352

For Canadian Warranty Information,
Please Visit www.grcanada.com/warranty
or call:
519—631—2870

THE GORMAN-RUPP COMPANY ● MANSFIELD, OHIO
GORMAN-RUPP OF CANADA LIMITED ● ST. THOMAS, ONTARIO, CANADA