B

OM-01703-OB02
August 20, 1985
Rev. - A

RD SERIES

INSTALLATION, OPERATION, PARTS LIST, AND MAINTENANCE MANUAL

MODEL

RD4A3-B

THE GORMAN-RUPP COMPANY • MANSFIELD, OHIO
GORMAN-RUPP OF CANADA LIMITED • ST. THOMAS, ONTARIO, CANADA
Printed in U.S.A.

© Copyright by the Gorman-Rupp Company 1985

TABLE OF CONTENTS

INTRODUCTION I-1

WARNINGS - SECTION A A-1

INSTALLATION - SECTION B B-1
- Pump Dimensions B-1
- PREINSTALLATION INSPECTION B-3
- POSITIONING PUMP B-3
  - Lifting B-3
  - Mounting B-4
- SUCTION AND DISCHARGE PIPING B-4
  - Materials B-4
  - Line Configuration B-4
  - Connections to Pump B-5
  - Gauges B-5
- SUCTION LINES B-5
  - Fittings B-5
  - Strainers B-6
  - Sealing B-6
  - Suction Lines In Sumps B-7
  - Suction Line Positioning B-7
- DISCHARGE LINES B-8
  - Siphoning B-8
  - Valves B-8
  - Priming Lines B-9
- ALIGNMENT B-9
  - Coupled Drives B-10
  - V-Belt Drives B-11

OPERATION - SECTION C C-1
- PRIMING C-1
  - Priming Pump Group Grind Check C-3
- STARTING C-3
  - Rotation C-3
- OPERATION C-4
  - Leakage C-4
  - Liquid Temperature And Overheating C-4
  - Strainer Check C-4
  - Pump Vacuum Check C-5
- STOPPING C-5
  - Cold Weather Preservation C-5
- BEARING TEMPERATURE CHECK C-6

PUMP TROUBLESHOOTING - SECTION D D-1

PUMP MAINTENANCE AND REPAIR - SECTION E E-1
- PERFORMANCE CURVE E-1
- PUMP MODEL - PARTS LIST E-3
- BEARING HOUSING ASSY - PARTS LIST E-5
- GROUP GRIND - PARTS LIST E-6
- PUMP AND SEAL DISASSEMBLY AND REASSEMBLY E-7
  - Pump Disassembly E-7
  - Impeller Removal E-8
  - Group Grind Disassembly E-8
  - Seal Removal E-9
  - Shaft And Bearing Removal And Disassembly E-9
  - Shaft and Bearing Reassembly And Installation E-10
  - Seal Installation E-11
  - Group Grind Reassembly E-13
  - Impeller Installation E-14
  - Group Grind Replacement E-15

Final Pump Reassembly E-17
LUBRICATION E-17
Seal Assembly E-17
Group Grind E-17
Bearings E-17

INTRODUCTION

This Installation, Operation, and Maintenance Manual is designed to help you achieve the best performance and longest life from your Gorman-Rupp pump.

This pump is a Roto-Prime™ Self-Priming Centrifugal Petroleum Pump, designed to handle **petroleum products only**. It incorporates an integral variable-capacity vane pump which automatically evacuates air and vapor from the suction line. This pump should **not** be used to handle water or other non-petroleum liquids. For specific service contact your Gorman-Rupp distributor, or the Gorman-Rupp Company.

If there are any questions regarding the pump or its application which are not covered in this manual or in other literature accompanying this unit, please contact your Gorman-Rupp distributor, or write:

The Gorman-Rupp Company P.O. Box 1217 Mansfield, Ohio 44901-1217	or	Gorman-Rupp of Canada Limited 70 Burwell Road St. Thomas, Ontario N5P 3R7

The basic pump is not furnished with a mounting base and power source, however these items are available from the factory as optional equipment. The pump is designed to be driven by an explosion proof motor nominally rated at 3450 RPM full load speed.

For information or technical assistance on the power source, contact the power source manufacturer's local dealer or representative.

The following are used to alert maintenance personnel to procedures which require special attention, to those which could damage equipment, and to those which could be dangerous to personnel:

NOTE

Instructions to aid in installation, operation, and maintenance or which clarify a procedure.

CAUTION

Instructions which must be followed to avoid causing damage to the product or other equipment incidental to the installation. These instructions describe the requirements and the possible damage which could result from failure to follow the procedures.

WARNING

These instructions must be followed to avoid causing injury or death to personnel, and describe the procedure required and the injury which could result from failure to follow the procedure.

WARNINGS - SECTION A

THESE WARNINGS APPLY TO ROTO-PRIME SERIES BASIC PUMPS. GORMAN-RUPP HAS NO CONTROL OVER OR PARTICULAR KNOWLEDGE OF THE POWER SOURCE WHICH WILL BE USED. REFER TO THE MANUAL ACCOMPANYING THE POWER SOURCE BEFORE ATTEMPTING TO BEGIN OPERATION.

WARNING

Before attempting to open or service the pump:

1. Familiarize yourself with this manual.
2. Lockout the power supply to the motor to ensure that the pump will remain inoperative.
3. Allow the pump to cool if overheated.
4. Vent the pump slowly and cautiously.
5. Close the suction and discharge valves.
6. Check the temperature before opening any covers, plates, or plugs.
7. Drain the pump.

WARNING

This pump is designed to handle petroleum products or similar hydrocarbon liquids. Do not attempt to pump water, corrosives, or any liquids which may damage the pump or endanger personnel as a result of pump failure.

WARNING

After the pump has been installed, make certain that the pump and all piping connections are tight, properly supported and secure before operation.

WARNING

Do not operate the pump without a guard in place over the rotating parts. Exposed rotating parts can catch clothing, fingers, or tools, causing severe injury to personnel.

WARNING

Do not operate the pump against a closed discharge valve for long periods of time. This could bring the liquid to a boil, build pressure, and cause the pump to rupture or explode.

WARNING

Overheated pumps can cause severe burns and injury. If overheating of the pump occurs:

1. Stop the pump immediately.
2. Allow the pump to cool.
3. Refer to instructions in this manual before restarting the pump.

WARNING

Overheating may produce dangerous fumes. Use extreme caution when venting the pump, or when removing covers, plates, plugs, or fittings.

WARNING

Do not install and operate a non-explosion proof motor in an explosive atmosphere. Install, connect, and operate the motor in accordance with the National Electric Code and all local codes. If there is a conflict between the instructions in the manual accompanying the unit and the National Electric Code or the applicable local code, the National or local code shall take precedence. All electrical equipment supplied with this pump conformed to applicable federal regulations and national codes in effect on the date of manufacture.

INSTALLATION - SECTION B

Since pump installations are seldom identical, this section offers only general recommendations and practices required to inspect, position, and arrange the pump and piping.

Most of the information pertains to a standard **static lift application** where the pump is positioned above the free level of liquid to be pumped.

If installed in a **flooded suction application** where the liquid is supplied to the pump under pressure, some of the information such as mounting, line configuration, and priming must be tailored to the specific application. Since the pressure supplied to the pump is critical to performance and safety, **be sure** to limit the incoming pressure to 50% of the maximum permissible operating pressure as shown on the pump performance curve.

For further assistance, contact your Gorman-Rupp distributor or the Gorman-Rupp Company.

Pump Dimensions

See Figure 1 for the approximate physical dimensions of this pump.

OUTLINE DRAWING

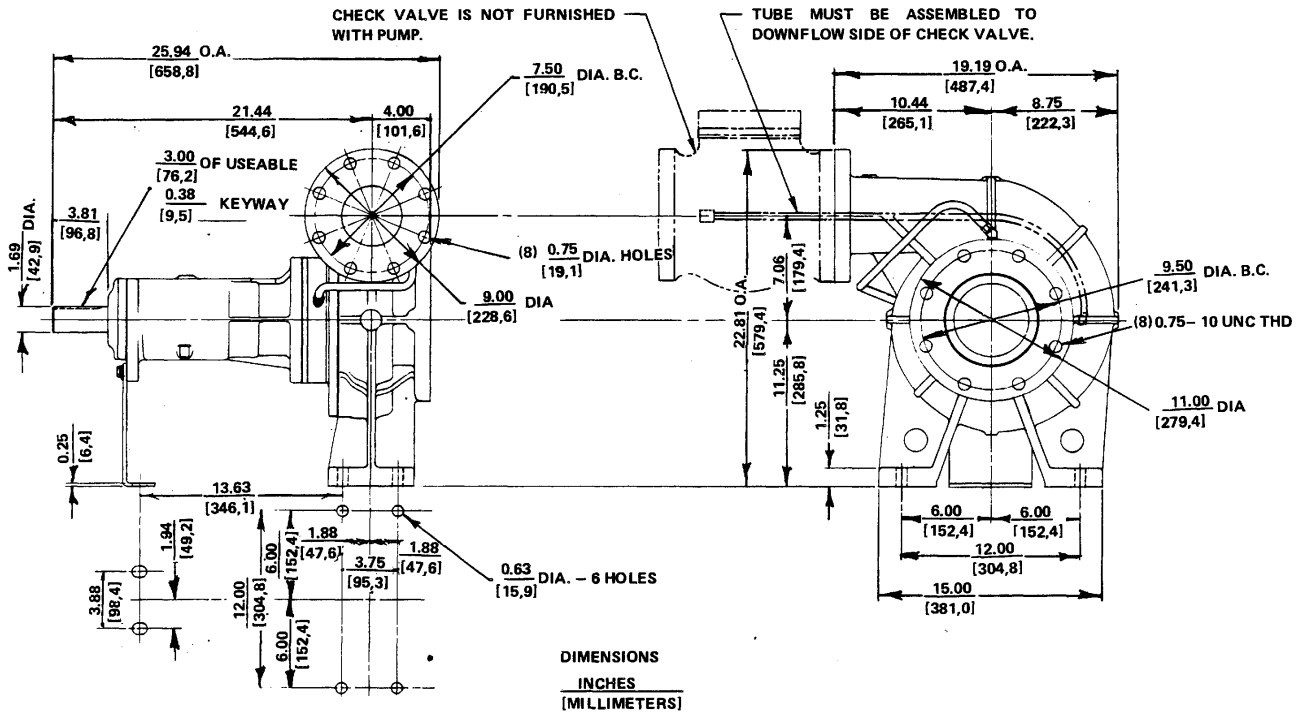

Figure 1. Pump Model RD4A3-B

CAUTION

This pump is not designed to handle water. Operation of the pump with water or water-based solutions will damage the group grind within the vane type priming pump. DO NOT install this pump to a storage tank which has been filled with water until the tank and lines have been completely drained. Install an 80 mesh screen in the suction piping to prevent debris from entering the pump. Check pump rotation with the suction line disconnected.

PREINSTALLATION INSPECTION

The pump assembly was inspected and tested before shipment from the factory. Before installation, inspect the pump for damage which may have occurred during shipment. Check as follows:

a. Inspect the pump for cracks, dents, damaged threads, and other obvious damage.

b. Check for and tighten loose bolts, nuts, capscrews, and other attaching hardware. Since gaskets tend to shrink after drying, check for and tighten loose nuts and capscrews securing mating surfaces.

c. Carefully read all tags, decals, and markings on the pump assembly, and follow the instructions indicated.

d. Check all lubricant levels and lubricate as necessary. Refer to LUBRICATION in the MAINTENANCE AND REPAIR section of this manual and perform duties as instructed.

e. If the pump and power source have been stored for more than 12 months, some of the components or lubricants may have exceeded their maximum shelf life. These **must be inspected or replaced** to ensure maximum pump service.

If the maximum shelf life has been exceeded, or if anything appears to be abnormal, contact your Gorman-Rupp distributor or the factory to determine the repair or updating policy. **Do not** put the pump into service until appropriate action has been taken.

POSITIONING PUMP

Lifting

Use lifting equipment with a capacity of a least **1,550 pounds**. This pump weighs approximately **310 pounds**, not including the weight of accessories and mounting base with power source. Customer installed equipment such as suction and discharge piping **must** be removed before attempting to lift.

CAUTION

The pump assembly can be seriously damaged if the cables or chains used to lift and move the unit are improperly wrapped around the pump.

Mounting

Locate the pump in an accessible place as close as practical to the liquid being pumped. Level mounting is essential for proper operation. The pump may have to be supported or shimmed to provide for level operation or to eliminate vibration.

CAUTION

> When the pump is installed under unusual conditions, the priming tube(s) may vibrate abnormally. If this occurs after the pump and piping are properly secured, contact the factory to obtain optional springs for the priming pump group grind. If vibration is not corrected, the tubing could fatigue and spill the liquid being pumped, resulting in a fire hazard.

SUCTION AND DISCHARGE PIPING

CAUTION

> Before connecting the suction and discharge piping, carefully check the storage tank and piping for construction debris such as nuts, bolts, wire, weld slag, and other foreign material. Install a commercially available 80 mesh screen in the suction line to prevent debris from entering the pump.

Materials

Either pipe or hose may be used for suction and discharge lines; however, the materials must be compatible with the liquid being pumped. If hose is used in suction lines, it must be the rigid-wall, reinforced type to prevent collapse under suction. Using piping couplings in suction lines is not recommended.

Line Configuration

Keep suction and discharge lines as straight as possible to minimize friction losses. Make minimum use of elbows and fittings, which substantially increase friction loss. If elbows are necessary, use the long-radius type to minimize friction loss.

Connections to Pump

Before tightening a connecting flange, align it exactly with the pump port. Never pull a pipe line into place by tightening the flange bolts and/or couplings.

Lines near the pump must be independently supported to avoid strain on the pump which could cause excessive vibration, decreased bearing life, and increased shaft and seal wear. If hose-type lines are used, they should have adequate support to secure them when filled with liquid and under pressure.

Gauges

Most pumps are drilled and tapped for installing discharge pressure and vacuum suction gauges. If these gauges are desired for pumps that are not tapped, drill and tap the suction and discharge lines not less than 18 inches from the suction and discharge ports and install the lines. Installation closer to the pump may result in erratic readings.

SUCTION LINES

To avoid air pockets which could affect pump priming, the suction line must be as short and direct as possible. When operation involves a suction lift, the line must always slope upward to the pump from the source of the liquid being pumped; if the line slopes down to the pump at any point along the suction run, air pockets will be created.

Refer to Figure 2 for the recommended configuration of the suction line.

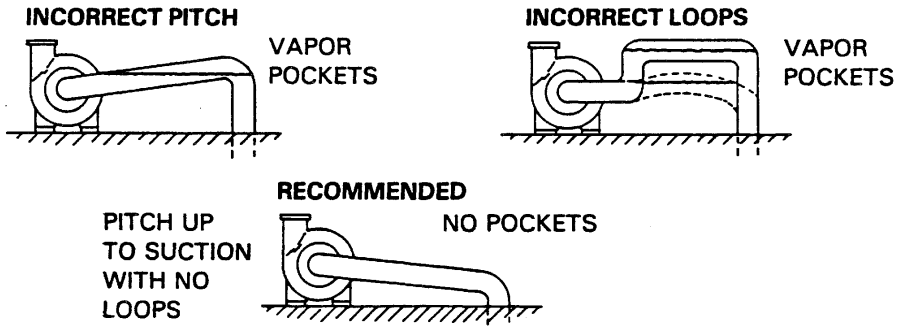

Figure 2. Suction Line Configuration

Fittings

Suction lines should be the same size as the pump inlet. If reducers are used in suction lines, they should be the eccentric type, and should be installed with

the flat part of the reducers uppermost to avoid creating air pockets. Valves are not normally used in suction lines, but if a valve is used, install it with the stem horizontal to avoid air pockets.

Refer to Figure 3 for the recommended entrance conditions using fittings.

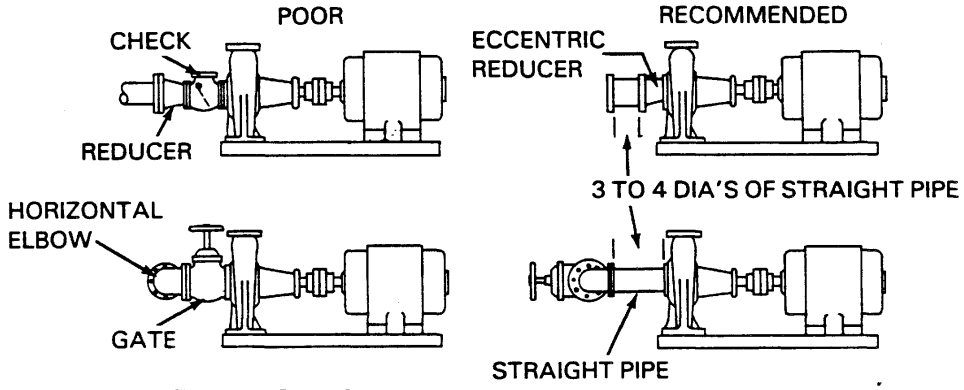

Figure 3. Entrance Conditions Using Fittings

Strainers

A suction strainer was not furnished with this pump since it is **not** designed to handle liquids containing solids. However, to protect the pump from accidental damage a commercially available 80 mesh screen should be installed in the suction line. Make certain that the total open area of the screen is at least three or four times the cross section of the suction line to ensure an adequate supply of liquid to the pump.

CAUTION

> Damage to the pump resulting from debris in the suction line will not be covered by the pump warranty.

Sealing

Since even a slight leak will affect priming, head, and capacity, especially when operating with a high suction lift, all connections in the suction line should be sealed with pipe dope to ensure an airtight seal. **Do not** use excessive amounts of compound at the suction and discharge flanges since it can enter the pump during initial startup and cause difficulty in priming. Use the compound sparingly. The pipe dope should be compatible with the liquid being pumped.

Suction Lines In Sumps

If a single suction line is installed in a sump, it should be positioned away from the wall of the sump at a distance equal to one and one-half times the diameter of the suction line.

If there is a liquid flow from an open pipe into the sump, the flow should be kept away from the suction inlet because the inflow will carry air down into the sump, and air entering the suction line will reduce pump efficiency.

If it is necessary to position inflow close to the suction inlet, install a baffle between the inflow and the suction inlet at a distance one and one-half times the diameter of the suction pipe. The baffle will allow entrained air to escape from the liquid before it is drawn into the suction inlet.

If two suction lines are installed in a single sump, the flow paths may interact, reducing the efficiency of one or both pumps. To avoid this, position the suction inlets so that they are separated by a distance equal to at least three times the diameter of the suction pipe.

Suction Line Positioning

The depth of submergence of the suction line is critical to efficient pump operation. Figure 4 shows recommended minimum submergence vs. velocity.

NOTE

The pipe submergence required may be reduced by installing a standard pipe increaser fitting at the end of the suction line. The larger opening size will reduce the inlet velocity. Calculate the required submergence using the following formula based on the increased opening size (area or diameter).

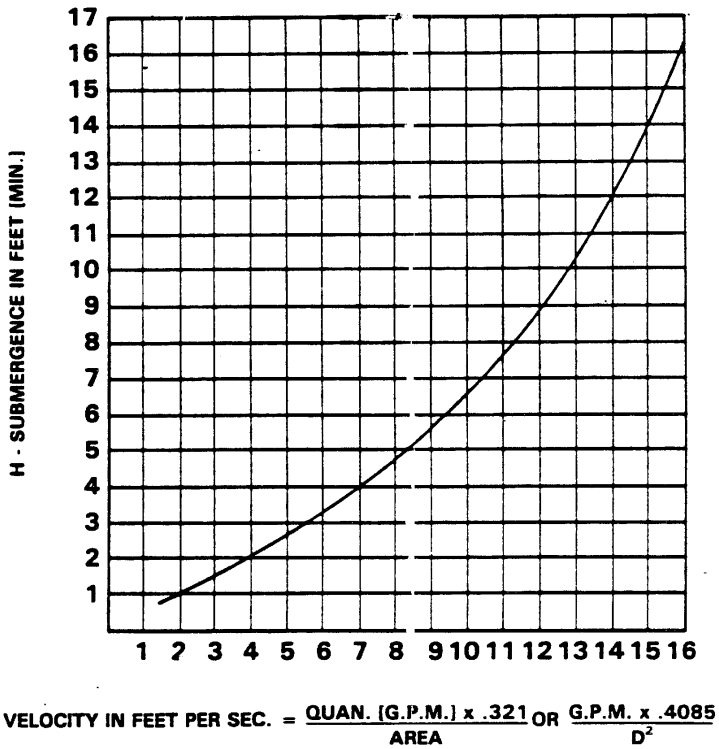

Figure 4. Recommended Minimum Suction Line Submergence Vs. Velocity

DISCHARGE LINES

Siphoning

Do not terminate the discharge line at a level lower than that of the liquid being pumped unless a siphon breaker is used in the line. Otherwise, a siphoning action causing damage to the pump could result.

Valves

The priming tube assembly incorporates an integral check valve designed to prevent recirculation of air or vapor ejected during the priming cycle. It will **not** serve as a discharge check valve in the system piping.

A standard 4 inch system check valve (available from Gorman-Rupp as an option) **must** be installed at the pump casing discharge. After the system check valve has been installed, connect the priming tube to the downflow side of the check valve.

If a throttling valve is desired in the discharge line, use a valve as large as the largest pipe to minimize friction losses. Never install a throttling valve in a suction line.

With high discharge heads, it is recommended that a throttling valve and a system check valve be installed in the discharge line to protect the pump from excessive shock pressure and reverse rotation when it is stopped.

Priming Lines

The integral Roto-Prime™ priming pump incorporates a priming line which evacuates the suction line effectively against back pressures ranging from atmospheric pressure up to approximately 8 psi. (measured downstream of the discharge check valve). If static discharge pressure exceeds 8 psi., an Air Release Valve (available from Gorman-Rupp) **must** be installed to permit the escape of air or vapor to atmosphere during initial priming or repriming cycle. This valve functions in conjunction with three priming tubes installed between the Air Release Valve, the priming pump and the pump suction.

ALIGNMENT

The alignment of the pump and its power source is critical for trouble-free mechanical operation. In either a flexible coupling or V-belt driven system, the driver and pump must be mounted so that their shafts are aligned with and parallel to each other. It is imperative that alignment be checked after the pump and piping are installed, and before operation.

NOTE

Check **Rotation**, Section C, before final alignment of the pump.

When mounted at the Gorman-Rupp factory, driver and pump are aligned before shipment. Misalignment will occur in transit and handling. Pumps **must** be checked and realigned before operation. Before checking alignment, tighten the foundation bolts. The pump casing feet and/or pedestal feet, and the driver mounting bolts should also be tightly secured.

WARNING

When checking alignment, disconnect the power source to ensure that the pump will remain inoperative.

CAUTION

Adjusting the alignment in one direction may alter the alignment in another direction. Check each procedure after altering alignment.

Coupled Drives

When using couplings, the axis of the power source must be aligned to the axis of the pump shaft in both the horizontal and vertical planes. Most couplings require a specific gap or clearance between the driving and the driven shafts. Refer to the coupling manufacturer's service literature.

Align spider insert type couplings by using calipers to measure the dimensions on the circumference of the outer ends of the coupling hub every 90 degrees. The coupling is in alignment when the hub ends are the same distance apart at all points (see Figure 5).

Align non-spider type couplings by using a feeler gauge or taper gauge between the coupling halves every 90 degrees. The coupling is in alignment when the hubs are the same distance apart at all points (see Figure 6).

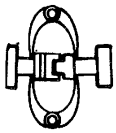

Figure 5. Aligning Spider-Type Couplings

Figure 6. Aligning Non-Spider Type Couplings

Check parallel adjustment by laying a straightedge across both coupling rims at the top, bottom, and side. When the straightedge rests evenly on both halves of the coupling, the coupling is in horizontal parallel alignment. If the coupling is misaligned, use a feeler gauge between the coupling and the straightedge to measure the amount of misalignment.

V-Belt Drives

When using V-belt drives, the power source and the pump must be parallel. Use a straightedge along the sides of the pulleys to ensure that the pulleys are properly aligned (see Figure 7). In drive systems using two or more belts, make certain that the belts are a matched set; unmatched sets will cause accelerated belt wear.

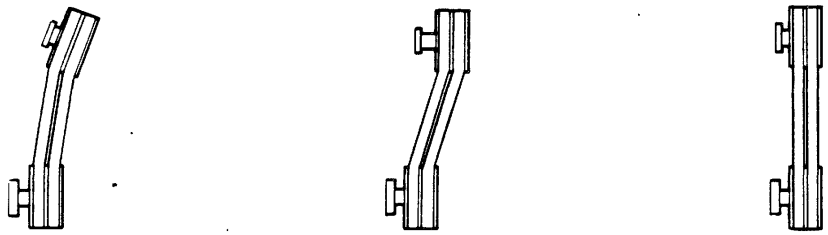

MISALIGNED: SHAFTS NOT PARALLEL | MISALIGNED: SHEAVES NOT IN LINE | ALIGNED: SHAFTS PARALLEL AND SHEAVES IN LINE

Figure 7. Alignment of V-Belt Driven Pumps

Tighten the belts in accordance with the belt manufacturer's instructions. If the belts are too loose, they will slip; if the belts are too tight, there will be excessive power loss and possible bearing failure. Select pulleys that will match the proper speed ratio; overspeeding the pump may damage both pump and power source.

WARNING

Do not operate the pump without a guard in place over the rotating parts. Exposed rotating parts can catch clothing, fingers, or tools, causing severe injury to personnel.

OPERATION - SECTION C

WARNING

This pump is designed to handle petroleum products or similar hydrocarbon liquids. Do not attempt to pump water, corrosives, or any liquids which may damage the pump or endanger personnel as a result of pump failure.

CAUTION

Pump speed and operating condition points must be within the continuous performance range shown on the curve. (See Section E, Page 1).

PRIMING

Install the pump and piping as described in INSTALLATION. Make sure that the piping connections are tight, and that the pump is securely mounted. Check that the pump is properly lubricated (see LUBRICATION in MAINTENANCE AND REPAIR).

CAUTION

Never run the pump dry of pumping medium. There must be a supply of liquid to the pump at all times to prevent destruction of the shaft seal faces.

CAUTION

Air Release Valve is required when static discharge pressure exceeds 8 psi.

Before starting the pump for the first time, remove the lubrication plug in the bearing housing (the first plug just behind the group grind). Pour approximately 8 ounces of SAE 10 or 20 non-detergent oil into the housing to lubricate the shaft seal and group grind rotor blades. Reinstall the plug.

Whenever air or vapor is present in the suction line, whether at start-up or during pumping operation, the spring located on top of the rotor forces the

group grind into its maximum eccentric position to automatically evacuate the air vapor through the priming tube and into the pump discharge.

CAUTION

> When the pump is installed under unusual conditions, the priming tube(s) may vibrate abnormally. If this occurs after the pump and piping are properly secured, contact the factory to obtain optional springs for the priming pump group grind. If vibration is not corrected, the tubing could fatigue and spill the liquid being pumped, resulting in a fire hazard.

As air and vapor is evacuated and the main centrifugal pump begins to deliver liquid, the resulting priming pump discharge pressure builds up against the underside of the slide and moves it toward the neutral (centered) position.

After all the air and vapor is removed and the centrifugal pump reaches full capacity, the priming pump discharge pressure overcomes the spring pressure on the slide and moves it towards the neutral position where it remains until air or vapor enters the system. While in the neutral position, the priming pump operates at minimum capacity and circulates only a small amount of liquid.

See Figure 1 for the theory of priming pump operation.

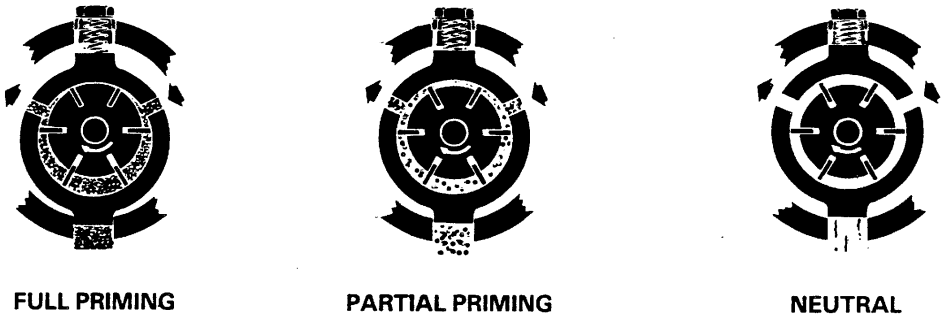

Figure 1. Automatic Priming Sequence

Priming is rapid, but not instantaneous. The priming pump will prime an absolutely dry line of four inch diameter in approximately two seconds per foot of suction pipe. Thus, if the suction line is 10 feet long, the pump will prime in approximately 20 seconds.

If the pump continually handles dry liquids, such as gasoline or solvents, priming pump vane wear may result, causing a loss of priming vacuum. If priming time increases significantly over a period of time, check the priming pump vanes for excessive wear.

NOTE

A special seal is available for pumps which are to handle solvents. When ordering a pump or replacement parts, specify what solvent the pump will handle.

Priming Pump Group Grind Check

With the pump inoperative, remove the group grind drain plug and drain any liquid from the group grind. Remove the spring cap and pressure regulating spring.

Insert a screwdriver or other suitable tool into the drain plug hole, and move the slide up and down.

The slide should travel 1/8 inch from the full priming position to the neutral position. If it does not, flush the group grind with penetrating oil, and check the slide travel again. The slide should move freely. Reinstall the pressure regulating spring and spring cap, and clean and reinstall the drain plug.

STARTING

Consult the operations manual furnished with the power source.

Before connecting a motor to the incoming power, check that the electrical service available matches the pump motor requirements stamped on the motor nameplate. Check that the motor speed meets pump specifications. This pump is designed to be driven at 3450 RPM full load speed; do not exceed 3600 RPM maximum.

Rotation

The correct direction of pump rotation is indicated by an arrow on the pump body or accompanying decals. If the pump is operated in the wrong direction, the impeller could become loosened from the shaft and seriously damage the pump.

CAUTION

The pump must operate in the direction indicated by the arrow on the pump, or accompanying decals. Reverse rotation could loosen the impeller and seriously damage the pump.

Consult the operating manual furnished with the pump power source before attempting to start the power source.

If an electric motor is used to drive the pump, remove V-belts, couplings, or otherwise disconnect the pump from the motor before checking motor rotation. Operate the motor independently while observing the direction of the motor shaft, or cooling fan.

If rotation is incorrect on a three-phase motor, have a qualified electrician interchange any two of the three phase wires to change direction. If rotation is incorrect on a single-phase motor, consult the literature supplied with the motor for specific instructions.

OPERATION

Leakage

No leakage should be visible at pump mating surfaces, or at pump connections or fittings. Keep all line connections and fittings tight to maintain maximum pump efficiency.

Liquid Temperature And Overheating

The **maximum** liquid temperature for this pump is 160°F. Do not apply it at a higher operating temperature.

Overheating can occur if operated with the valves in the suction or discharge lines closed. Operating against closed valves could bring the liquid to a boil, build pressure, and cause the pump to rupture or explode. If overheating occurs, stop the pump and allow it to cool before servicing it. Refill the pump casing with cool liquid.

WARNING

```
//////////////////////////////////////////////////////////////
//                                                          //
// Overheating may produce dangerous fumes. Use extreme     //
// caution when venting the pump, or when removing covers,  //
// plates, plugs, or fittings.                              //
//                                                          //
//////////////////////////////////////////////////////////////
```

Strainer Check

If a suction strainer has been shipped with the pump or installed by the user, check the strainer regularly, and clean it as necessary. The strainer should also be checked if pump flow rate begins to drop. If a vacuum suction gauge has been installed, monitor and record the readings regularly to detect strainer blockage.

Pump Vacuum Check

NOTE

Petroleum products are very sensitive to changes in temperature. Warmer temperatures elevate the product vapor pressure resulting in low vacuum readings. Do not mistake temperature problems for faulty pump installation or performance.

With the pump inoperative, install a vacuum gauge in the system, using pipe dope on the threads. Block the suction line and start the pump. At operating speed the pump should pull a vacuum of 15 to 17 inches or more of mercury. If it does not, check for air leaks in the seal, gasket, or discharge valve.

Open the suction line, and read the vacuum gauge with the pump primed and at operating speed. Shut off the pump. The vacuum gauge reading will immediately drop proportionate to static suction lift, and should then stabilize. If the vacuum reading falls off rapidly after stabilization, an air leak exists. Before checking for the source of the leak, check the point of installation of the vacuum gauge.

STOPPING

Never halt the flow of liquid suddenly. If the liquid being pumped is stopped abruptly, damaging shock waves can be transmitted to the pump and piping system. Close all connecting valves slowly.

CAUTION

If application involves a high discharge head, gradually close the discharge throttling valve before stopping the pump.

After stopping the pump, shut off the incoming power and lock it out to ensure that the pump will remain inoperative.

Cold Weather Preservation

Since the application of this pump is limited to petroleum products, normal freezing conditions will not damage the pump. However, during extremely severe conditions care should be exercised during start-up, especially if the pump has been idle for more than a few hours.

BEARING TEMPERATURE CHECK

Bearings normally run at higher than ambient temperatures because of heat generated by friction. Temperatures up to 160°F are considered normal for bearings, and they can operate safely to at least 180°F.

Checking bearing temperatures by hand is inaccurate. Bearing temperatures can be measured accurately by placing a contact-type thermometer against the housing. Record this temperature for future reference.

A sudden increase in bearing temperatures is a warning that the bearings are at the point of failing to operate properly. Make certain that the bearing lubricant is of the proper viscosity and at the correct level (see LUBRICATION in MAINTENANCE AND REPAIR). Bearing overheating can also be caused by shaft misalignment and/or excessive vibration.

When pumps are first started, the bearings may seem to run at temperatures above normal. Continued operation should bring the temperatures down to normal levels.

PUMP TROUBLESHOOTING - SECTION D

WARNING

Before attempting to open or service the pump:

1. Familiarize yourself with this manual.
2. Lockout the power supply to the motor to ensure that the pump will remain inoperative.
3. Allow the pump to cool if overheated.
4. Vent the pump slowly and cautiously.
5. Close the suction and discharge valves.
6. Check the temperature before opening any covers, plates, or plugs.
7. Drain the pump.

TROUBLE	POSSIBLE CAUSE	PROBABLE REMEDY
PUMP FAILS TO PRIME	Air leak in suction line.	Correct leak.
	Leaking or worn seal or pump gasket.	Check pump vacuum. Replace leaking or worn seal or gasket.
	Suction lift too high.	Measure lift w/vacuum gauge. Reduce lift and/or friction losses in suction line.
	Product vapor pressure too high.	Cool pump and product suction line.
	Discharge head too high.	Install bypass line.
	Pump speed too slow.	Check driver output; check belts or couplings for slippage.
	Pump running backwards.	Check direction of rotation and correct by interchanging any two motor leads at control box. (See Pump Rotation, Section C).
	Priming pump vanes worn; rotor clogged or stuck.	Check slide and replace vanes.
	Strainer clogged.	Check strainer and clean if necessary.
PUMP STOPS OR FAILS TO DELIVER RATED FLOW OR PRESSURE	Air leak in suction line.	Correct leak.
	Leaking or worn seal or pump gasket.	Check pump vacuum. Replace leaking or worn seal or gasket.

TROUBLESHOOTING

TROUBLE	POSSIBLE CAUSE	PROBABLE REMEDY
PUMP STOPS OR FAILS TO DELIVER RATED FLOW OR PRESSURE(cont.)	Strainer clogged.	Check strainer and clean if necessary.
	Suction intake not submerged at proper level or sump too small.	Check installation and correct submergence as needed.
	Impeller or other wearing parts worn or damaged.	Replace worn or damaged parts. Check that impeller is properly centered and rotates freely.
	Pump speed too slow.	Check driver output; check belts or couplings for slippage.
	Suction lift or discharge head too high.	Check piping installation and install bypass line if needed. See INSTALLATION.
	Low or incorrect voltage.	Measure control box voltage, both when pump is running and when shut off.
PUMP REQUIRES TOO MUCH POWER	Pump speed too high.	Check driver output; check that sheaves or couplings are correctly sized.
	Discharge head too low.	Adjust discharge valve.
	Impeller or other wearing parts worn or damaged.	Replace worn or damaged parts. Check that impeller is properly centered and rotates freely.
	Bearing(s) frozen.	Disassemble pump and check bearing(s).
PUMP CLOGS FREQUENTLY	Solids or debris jamming impeller or priming pump.	Check suction line and storage tank for foreign matter. Install or clean strainer screen.

TROUBLESHOOTING

TROUBLE	POSSIBLE CAUSE	PROBABLE REMEDY
EXCESSIVE NOISE	Cavitation in pump.	Reduce suction lift and/or friction losses in suction line. Record vacuum and pressure gauge readings and consult local representative or factory.
	Pumping entrained air.	Locate and eliminate source of air bubble.
	Pump or drive not securely mounted.	Secure mounting hardware.
	Impeller or other wearing parts worn or damaged.	Replace worn or damaged parts. Check that impeller is properly centered and rotates freely.
BEARINGS RUN TOO HOT	Bearing temperature is high, but within limits.	Check bearing temperature regularly to monitor any increase.
	Suction and discharge lines not properly supported.	Check piping installation for proper support.
	Drive misaligned.	Align drive properly.

PUMP MAINTENANCE AND REPAIR - SECTION E

MAINTENANCE AND REPAIR OF THE WEARING PARTS OF THE PUMP WILL MAINTAIN PEAK OPERATING PERFORMANCE.

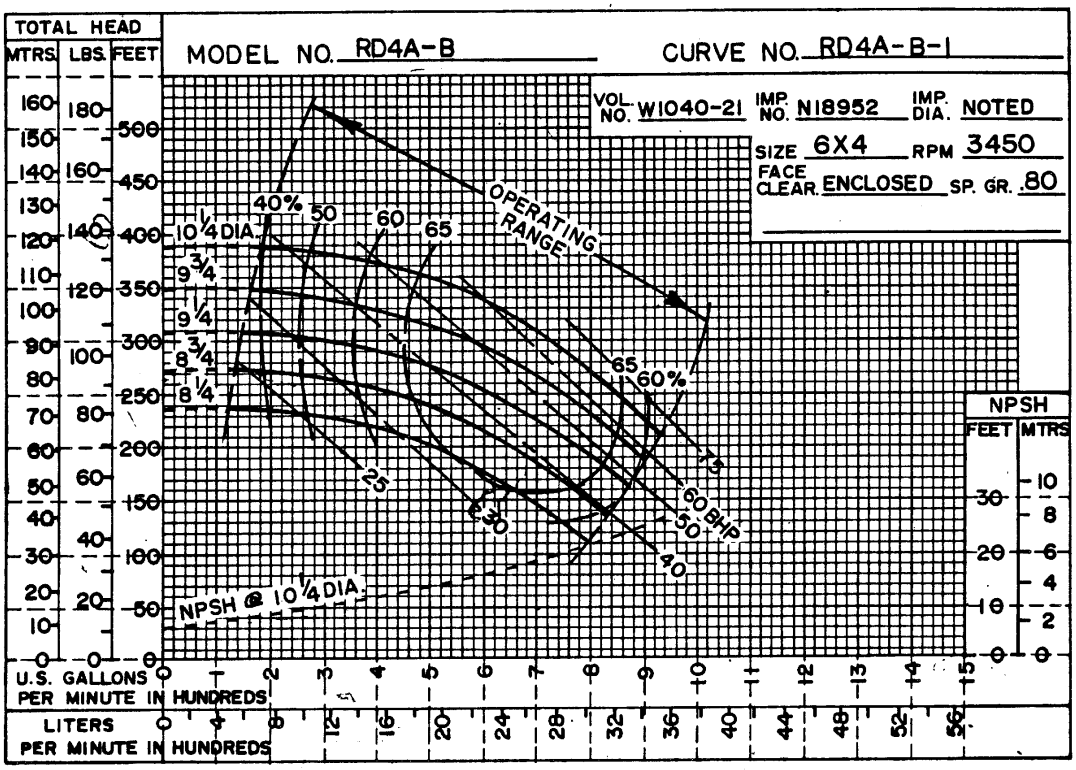

*STANDARD PERFORMANCE FOR PUMP MODEL RD4A3-B

*Based on 70°F clear water at sea level with minimum suction lift, corrected to .80 specific gravity. Since pump installations are seldom identical, your performance may be different due to such factors as viscosity, specific gravity, elevation, temperature, and impeller trim.

If your pump serial number is followed by an "N", your pump is **NOT** a standard production model. Contact the Gorman-Rupp Company to verify performance or part numbers.

CAUTION

Pump speed and operating condition points must be within the continuous performance range shown on the curve. (See Section E, Page 1).

SECTIONAL DRAWING

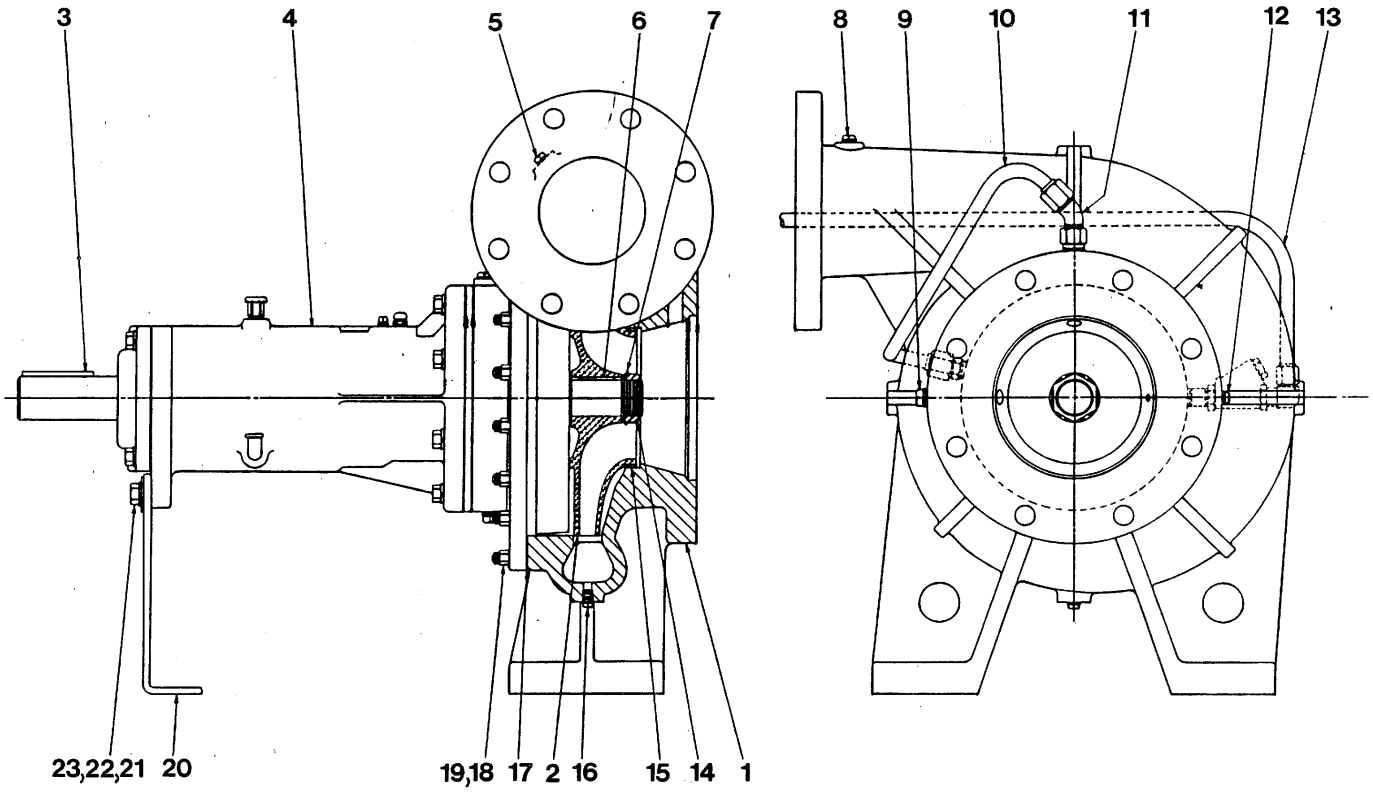

Figure 1. Pump Model RD4A3-B

PARTS LIST
Pump Model RD4A3-B
(From S/N 792919 up)

If your pump serial number is followed by an "N", your pump is **NOT** a standard production model. Contact the Gorman-Rupp Company to verify part numbers.

ITEM NO.		PART NAME	PART NUMBER	MATL CODE	QTY
1		PUMP CASING	W01040-21	10020	1
2	*	IMPELLER	N18952	13040	1
3		SHAFT KEY	N00611	15990	1
4		BEARING HOUSING ASSY (SEE FIGURE 2)	44143-093	-----	1
5		PIPE PLUG	P00002	11990	1
6		IMPELLER KEY	K79330-23	15990	1
7		IMPELLER WASHER	S00302	-----	1
8		PIPE PLUG	P00002	11990	1
9		PIPE PLUG	P00006	11990	1
10		SUCTION TUBE ASSY	R11643	-----	1
11		MALE ELBOW	25812-161	-----	1
12		PIPE PLUG	P00002	11990	1
13		PRIMING TUBE ASSY	T08815	-----	1
		PRIMING TUBE ELBOW	25812-161	1	
14		IMPELLER NUT	K76645	15111	1
15	**	WEAR RING	NOT AVAILABLE		2
16		PUMP CASING DRAIN PLUG	P00002	11990	1
17	*	PUMP CASING GSKT	R11618	20000	1
18		STUD	C00807	15991	18
19		HEX NUT	D00008	15991	18
20		BEARING HOUSING SUPPORT	R12852-02	15590	1
21		HEX HD CAPSCREW	B00805	15991	2
22		LOCKWASHER	J00008	15991	2
23		FLAT WASHER	K00008	15991	2
NOT SHOWN:					
	*	DISCHARGE FLANGE GSKT	N14147	18000	1
	*	SUCTION FLANGE GSKT	1679-G	18000	1
		STRAINER	26841-074	-----	1
		NAME PLATE	2613-DZ	13990	1
		DRIVE SCREW	BM#04-03	15990	2
OPTIONAL:					
		DISCHARGE CHECK VALVE			
		-CHECK VALVE	26642-205	-----	1
		-HEX HD CAPSCREW	B01011	-----	8
		-GASKET	K79206-29	-----	1
		-HEX NUT	D00010	-----	8
		BRONZE IMPELLER	N18952	14140	1
		AUTO AIR RELEASE VALVE KIT	GRP52-05A	-----	1

**All Roto-Prime™ impellers are trimmed and include the wear ring and groove pins. Wear rings are not sold separately.

*INDICATES PARTS RECOMMENDED FOR STOCK

Above Serial Numbers Do Not Apply To Pumps Made In Canada

CANADIAN SERIAL NO. ..... AND UP

SECTIONAL DRAWING

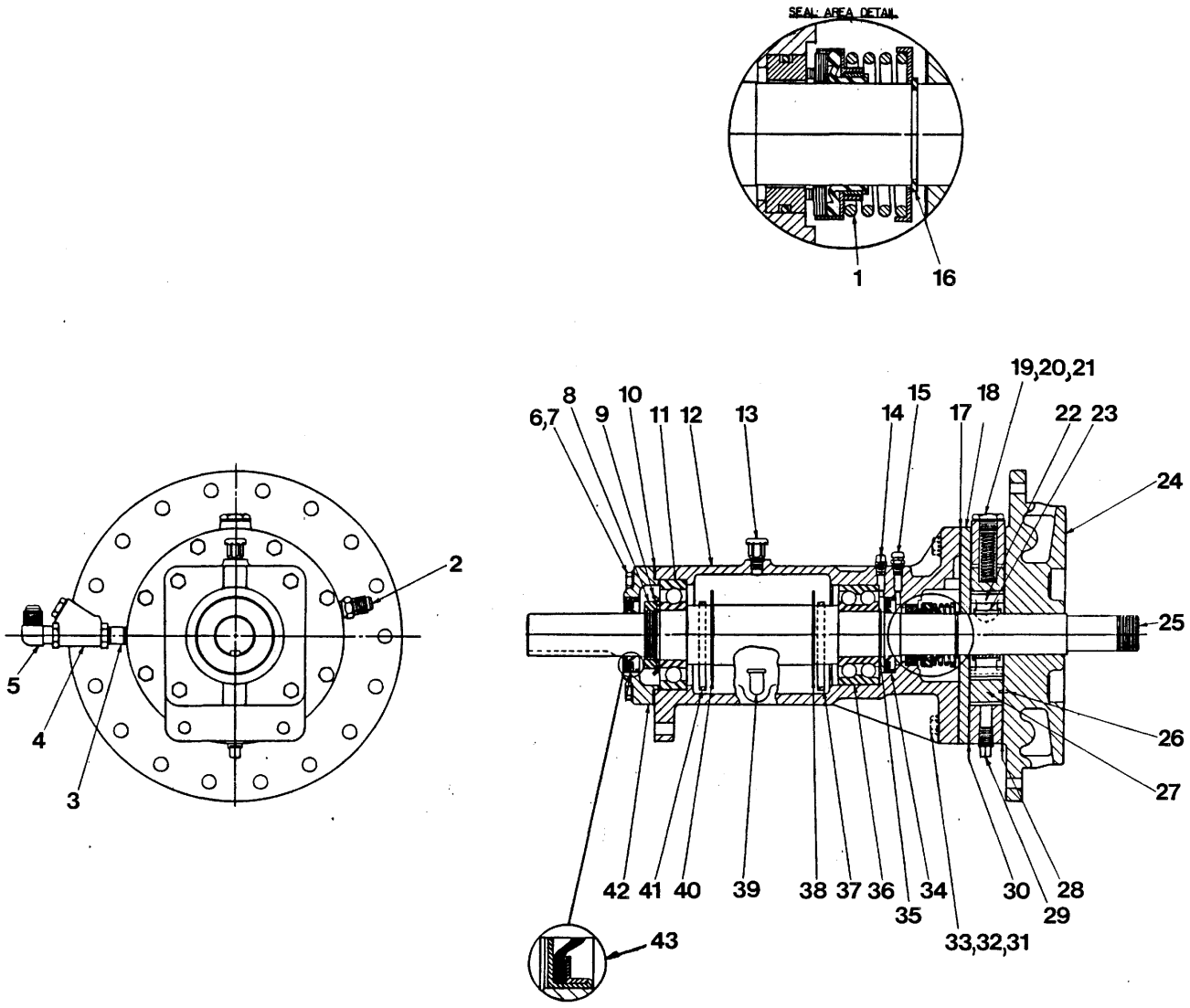

Figure 2. Bearing Housing Assembly 44143-093

PARTS LIST
Bearing Housing Assembly 44143-093

ITEM NO.	PART NAME	PART NUMBER	MATL CODE	QTY
1	*SEAL ASSY	25271-921	-----	1
2	CONNECTOR	25812-214	-----	1
3	HVY PIPE NIPPLE	THA00606	15070	1
4	CHECK VALVE	26641-082	-----	1
5	MALE ELBOW	25812-011	-----	1
6	HEX HD CAPSCREW	21632-597	15991	4
7	LOCKWASHER	J00006	15991	4
8	BEARING LOCKNUT	23962-011	-----	1
9	BEARING TABWASHER	23962-511	-----	1
10	*BEARING CAP GSKT	N18938-01	18000	1
11	*OUTBOARD BEARING	23275-211	-----	1
12	BEARING HOUSING	W01172-04	10020	1
13	AIR VENT	S01703	-----	1
14	PIPE PLUG	P00002	11990	1
15	AIR VENT FITTING	S02162	-----	1
16	RETAINING RING	24124-243	-----	1
17	*SPACER PLATE GSKT	R12923	18000	1
18	SPACER PLATE	R12771-02	10020	1
19	SPRING CAP	K68064	15991	1
20	*PRESSURE REG SPRING	K82659	-----	1
21	*SPRING CAP GSKT	K86067	-----	1
22	*ROTOR BLADE	K79300-22	-----	6
23	WOODRUFF KEY	K61559	15990	1
24	BODY COVER	T06762-21	10020	1
25	*IMPELLER SHAFT	T08623-02	15010	1
26	*LOCATING PIN	21154-666	-----	1
27	GROUP GRIND (SEE FIGURE 3)	42212-015	-----	1
28	**CENTER PLATE GSKT	R10150	18010	2
29	GRP GRIND DRAIN PLUG	P00006	11990	1
30	*CENTER PLATE GSKT	R10150	18010	1
31	HEX HD CAPSCREW	21632-611	-----	8
32	LOCKWASHER	J00006	15991	8
33	*DOWEL PIN	21133-113	-----	2
34	*OIL SEAL	25227-240	-----	1
35	RETAINING RING	24124-245	-----	1
36	*INBOARD BEARING	23421-410	-----	1
37	OIL RING	K86483	15030	1
38	OIL RING STOP	K76632-01	-----	1
39	OIL CUP	26713-054	-----	1
40	OIL RING STOP	K76632-01	-----	1
41	OIL RING	K86483	15030	1
42	BEARING CAP	R12770-02	10010	1
43	*OIL SEAL	25227-240	-----	1
OPTIONAL:				
	SST IMP SHAFT	T08623-02	17080	1
	GRP GRIND W/CAST IRON ROTOR	LK05411	-----	1
	*>OIL LUBE BEARING HOUSING ASSEMBLY	CONSULT FACTORY		1

* INDICATES PARTS RECOMMENDED FOR STOCK

** 2 Gaskets used here when rotor or slide is thicker than center plate.

*> All other components same as standard Bearing Housing Assembly.

SECTIONAL DRAWING

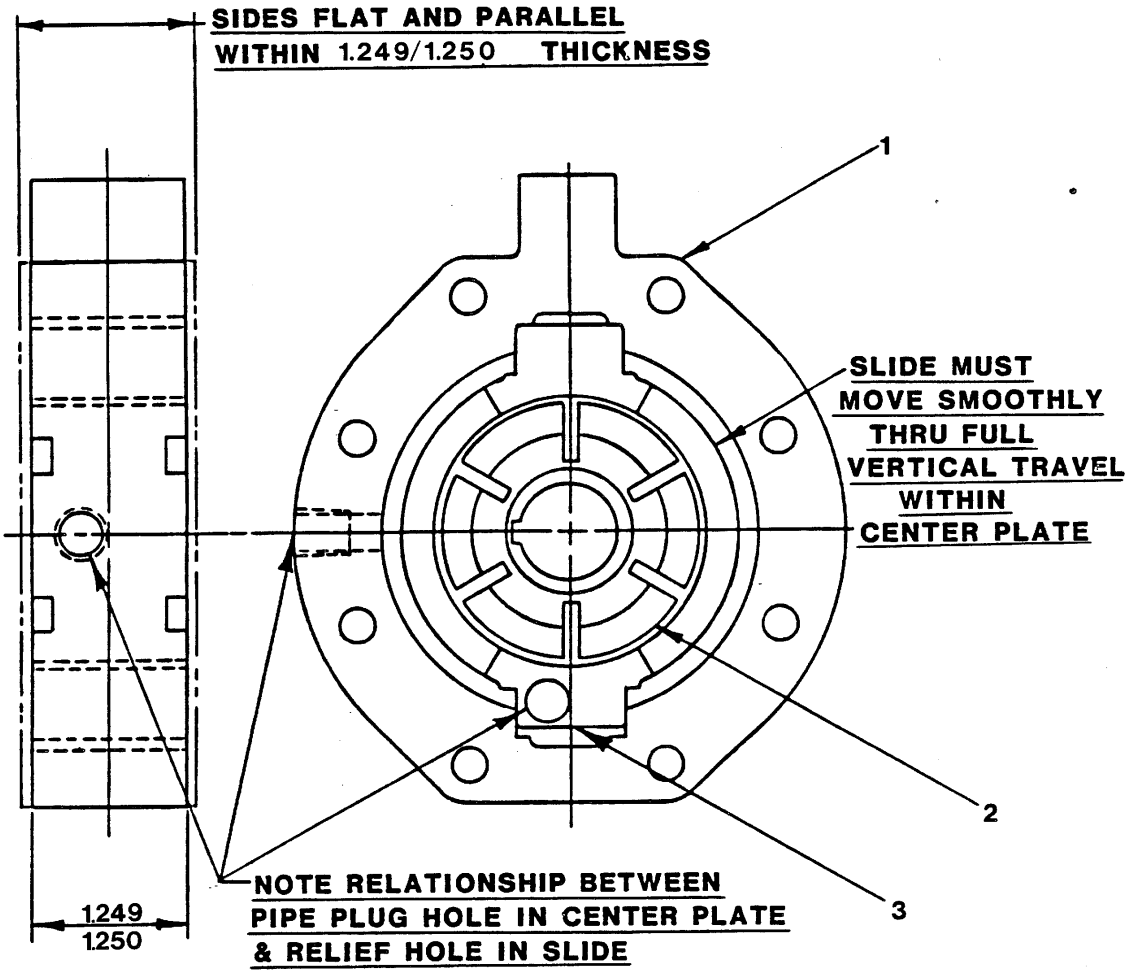

Figure 3. Group Grind 42212-015

PARTS LIST

ITEM NO.	PART NAME	PART NUMBER	MATL CODE	QTY
1	CENTER PLATE	NOT AVAILABLE		1
2	ROTOR	NOT AVAILABLE		1
3	SLIDE	NOT AVAILABLE		1

Note: The group grind must be replaced as a complete unit; individual piece parts are not sold separately.

PUMP AND SEAL DISASSEMBLY AND REASSEMBLY

This pump requires little service due to its rugged, minimum-maintenance design. However, if it becomes necessary to inspect or replace the wearing parts, follow these instructions, which are keyed to the sectional views (see Figures 1, 2 and 3) and the accompanying parts lists.

Before attempting to service the pump, disconnect or lock out the power supply to prevent accidental start up. Close all valves in the suction and discharge piping and drain the pump casing and group grind by removing the drain plugs (16, Figure 1, and 29, Figure 2). Clean and reinstall the drain plugs.

All parts of this pump except the pump casing (1), may be serviced without removing mounting hardware or suction and discharge lines; however, the following instructions are written assuming complete disassembly is required.

WARNING

Before attempting to open or service the pump:

1. Familiarize yourself with this manual.
2. Lockout the power supply to the motor to ensure that the pump will remain inoperative.
3. Allow the pump to cool if overheated.
4. Vent the pump slowly and cautiously.
5. Close the suction and discharge valves.
6. Check the temperature before opening any covers, plates, or plugs.
7. Drain the pump.

WARNING

Before operating or servicing the pump, be certain proper safety practices are followed. Provide adequate ventilation, prohibit smoking, wear static-resistant clothing and shoes. Clean up all fuel spills immediately after occurrence.

Pump Disassembly

(Figure 1)

Remove the safety guards and separate the power source and drive components from the pump. Remove the key (3).

Disconnect the suction and discharge piping from the pump casing. Disconnect the priming tube assembly (13) from the system check valve (not shown) and the priming tube check valve (4, Figure 2). Remove the pipe nipple, check valve, and male elbow (3, 4 and 5, Figure 2) from

Disconnect the suction tube assembly (10) from the connector (2, Figure 2) and pump casing, and remove the connector from the center plate (1, Figure 3).

Support the bearing housing with a suitable hoist and sling. Remove the hardware (21, 22 and 23) securing the bearing housing to the bearing housing support (20). Disengage the hardware securing the bearing housing support to the base and remove the support.

Remove the nuts (19) and install two jacking screws (3/8-16 UNC, not supplied) in the tapped holes in the body cover. Tighten the screws evenly to prevent binding. Pull the bearing housing, body cover, and assembled parts straight out of the casing.

Remove the pump casing gasket (17).

Impeller Removal

(Figure 1)

Immobilize the impeller (2) by inserting a 9/16 inch diameter steel bar between the impeller vanes. **Be careful** not to damage vanes. Straighten the tabs on the impeller tabwasher (7) and remove the impeller nut (14) and the washer.

Install two 1/2-13 UNC capscrews in the tapped holes in the impeller and use a gear puller to remove the impeller and key (6) from the shaft.

NOTE

An alternate method of removing the impeller is to carefully pry on the backside of the impeller (directly against two opposing vanes) with equal pressure until the impeller comes off the shaft.

Group Grind Disassembly

(Figure 2)

Remove the spring cap, gasket and spring (19, 20 and 21).

Remove the hardware (31 and 32) and use a soft-faced mallet to tap around the outside diameter of the body cover (24) until it separates from the bearing housing (12) and group grind (27). Remove the outboard center plate gasket(s) (28) and use solvent to clean the mating surfaces. **Be careful** not to scratch or mar the surfaces.

NOTE

Use an ink marker to match mark the center plate, rotor, and slide of the group grind assembly (27). These parts are ground as an assembly and their relative locations **must** be maintained.

If group grind replacement is necessary, tap out the group grind dowel pins (33). Slide the group grind assembly and rotor blades (22) off the shaft. Retain the rotor woodruff key (23).

Remove the inboard center plate gasket (30), spacer plate (18), and spacer plate gasket (17). Clean any gasket adhesive from the mating surfaces using solvent. **Be careful** not to scratch or mar the surfaces.

Seal Removal

(Figure 2 and 4)

Remove the seal snap ring (16) with caution; tension on the seal spring will be released. Remove the seal spring, spring centering washer, and rotating portion of the seal assembly. Use a stiff wire with a hooked end to remove the stationary seat and O-ring. **Be careful** not to damage the seal faces.

If no further disassembly is required, see **Seal Installation**.

Shaft And Bearing Removal And Disassembly

(Figure 2)

When the pump is properly operated and maintained, the bearing housing should not require disassembly. Disassemble the shaft and bearings **only** when there is evidence of wear or damage.

Remove the oil cup (39) and drain the oil from the bearing housing before removing the shaft and bearings.

Disengage the hardware (6 and 7) and remove the bearing cap (42), oil seal (43), and gasket (10). Inspect the oil seal, and if replacement is required, press it from the bearing cap.

Place a block of wood against the impeller end of the shaft (25) and tap the shaft and assembled bearings out of the bearing housing.

Straighten the tabs of the bearing washer (9) and remove the bearing lock nut (8) and the washer. Use an arbor press to remove the outboard ball bearing (11). Remove the outboard oil ring (41).

Remove the retaining ring (35), and press the inboard ball bearing (36) from the shaft. Remove the inboard oil ring (37).

Inspect the oil ring stops (38 and 40), and if replacement is required, press them off the shaft.

Inspect the inboard oil seal (34), and if replacement is required, use a screwdriver or other suitable tool to tap it out of the bearing housing.

Shaft and Bearing Reassembly And Installation

(Figure 2)

Clean the bearing housing, shaft and all component parts (except the bearings) with a soft cloth soaked in cleaning solvent. Inspect the parts for wear or damage and replace as necessary.

WARNING

Most cleaning solvents are toxic and flammable. Use them only in a well-ventilated area free from excessive heat, sparks, and flame. Read and follow all precautions printed on solvent containers.

Inspect the shaft for distortion, nicks or scratches or damaged threads on the impeller end. Dress small nicks and burrs with a fine file or emery cloth. Replace the shaft if defective.

Clean the bearings thoroughly in **fresh** cleaning solvent. Dry the bearings with filtered compressed air and coat with light oil.

Rotate the bearings by hand to check for roughness or binding and inspect the bearing balls. If rotation is rough or the bearing balls are discolored, replace the bearings.

CAUTION

Bearings must be kept free of all dirt and foreign material. Failure to do so will greatly shorten bearing life. DO NOT spin dry bearings. This may scratch the balls or races and cause premature bearing failure.

The bearing tolerances provide a tight press fit onto the shaft and a snug slip fit into the bearing housing. Replace the shaft or bearing housing if the proper bearing fit is not achieved.

If removed for replacement, press the inboard oil seal (34) into the bearing housing with the lip positioned as shown in Figure 2 and apply a coating of light oil to the seal lip.

If removed for replacement, press the inboard and outboard oil ring stops (38 and 40) onto the shaft.

Install the inboard oil ring (37). Coat the bearings with light oil and press the inboard bearing (36) onto the shaft until it seats against the shaft shoulder and install the bearing retaining ring (35). Install the outboard oil ring (41). Install the outboard bearing (11) and secure with the tabwasher (9) and lock nut (8).

CAUTION

> When installing the bearings onto the shaft, NEVER press or hit against the outer race, balls, or ball cage. Press ONLY on the inner race.

Slide the shaft and assembled bearings into the bearing housing until the outboard bearing seats against the bearing housing shoulder. **Be careful** not to damage the lip of the inboard oil seal (34) on the shaft threads or keyway.

CAUTION

> When installing the shaft and bearings into the bearing bore, push against the outer race. NEVER hit the balls or ball cage.

Press the oil seal (43) in the bearing cap with the lip positioned as shown in Figure 2 and apply a coating of light oil to the seal lip.

Install the bearing cap gasket (10), and secure the bearing cap (42) to the bearing housing with the hardware (6 and 7). **Be careful** not to cut the oil seal lip on the shaft keyway, or roll the lip during installation.

Seal Installation

(Figure 2 and 4)

Clean the seal cavity and shaft with a cloth soaked in fresh cleaning solvent.

WARNING

> Most cleaning solvents are toxic and flammable. Use them only in a well-ventilated area free from excessive heat, sparks, and flame. Read and follow all precautions printed on solvent containers.

The seal is not normally reused because wear patterns on the finished faces cannot be realigned during reassembly. This could result in premature failure. If necessary to reuse an old seal in an emergency, **carefully** wash all metallic parts in fresh cleaning solvent and allow to dry thoroughly.

Handle the seal parts with extreme care to prevent damage. Be careful not to contaminate precision finished faces; even fingerprints on the faces can shorten seal life. If necessary, clean the faces with a non-oil based solvent and a

clean lint free tissue. Wipe **lightly** in a concentric pattern to avoid scratching the faces.

Inspect the seal components for wear, scoring, grooves, and other damage that might cause leakage. If any components are worn, replace the complete seal; **never mix old and new seal parts.**

If a replacement seal is being used, remove it from the container and inspect the precision finished faces to ensure that they are free of any foreign matter.

To ease installation of the seal, lubricate the bellows and stationary seat O-ring with a very **small** amount of oil, and apply a drop of light lubricating oil on the finished faces; **never** use grease. Secure the rotating assembly in a **vertical** position with the impeller end up and assemble the seal as follows, (see Figure 4).

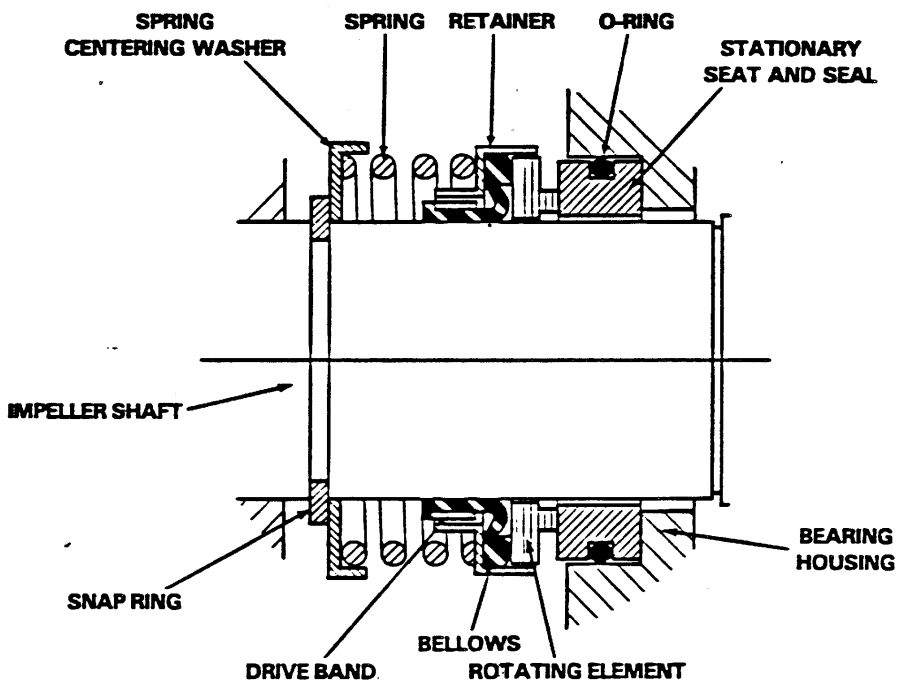

Figure 4. 25271-921 Seal Assembly

CAUTION

> This seal is not designed for operation at temperatures above 160°F. Do not use at higher operating temperatures.

Install the stationary seat O-ring in the stationary seat and use hand pressure to press this subassembly into bore of bearing housing until it seats squarely against the bore shoulder.

Subassemble the rotating portion of the seal (consisting of the rotating element, bellows and retainer) as shown in Figure 4, making sure the "drive lugs" (located on the O.D. of the rotating element) engage the "ears" stamped in the metal retainer. Position this subassembly on the shaft and apply firm, steady pressure on the seal retainer until it slides onto the shaft and the rotating and stationary elements contact. A push tube cut from a length of plastic pipe would aid this installation. The I.D. of the tube should be approximately the same as the I.D. of the seal spring.

Install the seal spring and spring centering washer, and secure with the snap ring (16).

Group Grind Reassembly

(Figure 2)

NOTE

If any component in the group grind assembly needs replacement, the entire group grind assembly must be replaced as a unit. Refer to special instructions in **Group Grind Replacement** at this time.

Install a new spacer plate gasket (17), the spacer plate (18) and inboard center plate gasket (30). Be sure the oval hole in the spacer plate matches up with the tubing hole.

Inspect the group grind rotor (2, Figure 3), for wear or damage. If replacement is necessary, refer to specific instructions in **Group Grind Replacement**. If the group grind is not being replaced, proceed as follows:

Install the rotor woodruff key (23) in the shaft keyway.

Install the center plate (1, Figure 3), and dowel pins (33). Install the slide (3, Figure 3) in the center plate, making sure the recessed hole in the slide faces toward the impeller. Check for free movement of the slide in the center plate.

Coat both ends of the rotor (2, Figure 3) with "Hercules Moly Duo-Lube, Style 96", or equivalent lubricant and install it on the shaft. Check the rotor for free movement.

Inspect the rotor blades (22) for wear or damage and replace as required. Align the blades with the rotor slots and install the blades.

Install one outboard center plate gasket (28).

NOTE

If the thickness of the rotor or slide is greater than the thickness of the center plate, install a second center plate gasket. To check thickness, temporarily secure the center plate by installing two 7/16-20 UNF X 2 inch bolts (not furnished) through the bearing housing and spacer plate and into the tapped holes in the center plate. Place a straight edge across the center plate and rotate shaft. If the rotor or blades touch the straight edge at any point, add the second gasket and recheck. The clearance should be no more than .001 inch from the rotor to the straight edge. No more than two gaskets should be required. Remove the temporary bolts.

Inspect the locating pin (26), and replace if required. Align the pin in the recessed hole in the slide, and use a soft-faced mallet to tap the body cover into place on the dowel pins. Secure the body cover with the hardware (31 and 32). Be sure the dowel pins are fully seated into the body cover.

Refer to **Priming Pump Group Grind Check** in Section C, and check operation.

Install the pressure regulating spring, spring cap gasket, and spring cap (19, 20 and 21).

Impeller Installation

(Figure 1)

Inspect the impeller (2), and replace if cracked or badly worn. The wear rings (15) are an integral part of the impeller. If the wear rings are badly worn, the entire impeller must be replaced or returned to the factory for wear ring replacement.

Install the impeller key (6) and slide the impeller onto the shaft. Immobilize the impeller, and secure it with the impeller tabwasher (7) and impeller nut (14). Bend the tabs on the washer over the impeller nut.

Before operation, lubricate the rotor blades as indicated in **PRIMING**, Section C.

Group Grind Replacement

(Figure 2)

CAUTION

> If the group grind requires replacement, it is STRONGLY recommended that the pump be returned to the factory. Fitting procedures involve extremely close tolerances which are critical to efficient operation. These procedures are difficult to accomplish outside the factory.

If the group grind **must** be replaced in the field, dowel holes in the center plate must be drilled and reamed after the group grind, body cover, and impeller have been fully reassembled.

Install a new spacer plate gasket (17), the spacer plate (18), and inboard center plate gasket (30). Be sure the oval hole in the spacer plate matches up with the tubing hole.

Install the rotor woodruff key (23) in the shaft keyway.

Install the center plate (1, Figure 3) on the shaft. Install the slide (3, Figure 3) in the center plate, making sure the recessed hole in the slide faces toward the impeller. Check for free movement of the slide in the center plate.

Coat both ends of the rotor with "Hercules Moly Duo-Lube, Style 96", or equivalent lubricant and install it on the shaft. Check the rotor for free movement.

Inspect the rotor blades (22) for wear or damage and replace as required. Align the blades with the rotor slots and install the blades.

With the body cover (24) removed, position the slide in full priming position (in contact with the bottom of the center plate). To check rotor concentricity, rotate the shaft until the highest point on the rotor comes in contact with the slide. Move the center plate and slide until a .002 inch feeler gauge can be inserted between the rotor and slide at the point of contact. Secure the center plate in this position with two 7/16 - 20 UNF X 2 inch capscrews (not furnished) inserted through the bearing housing and into the tapped holes in center plate.

NOTE

> The pressure regulating spring (21) **must** be removed during this procedure; otherwise, spring tension on the slide could "cock" the assembly and prevent accurate measurements.

Remove the feeler gauge and install one outboard center plate gasket (28).

NOTE

If the thickness of the rotor or slide is greater than the thickness of the center plate, install a second center plate gasket. To check thickness, place a straight edge across the center plate and rotate the shaft. If the rotor or blades touch the straight edge at any point, add the second gasket and recheck. The clearance should be no more than .001 inch from the rotor to the straight edge. No more than two gaskets should be required.

Inspect the locating pin (26), and replace if required. Align the pin in the recessed hole in the slide, and position the body cover on the shaft. **Be careful** not to disturb the position of the center plate. Secure the body cover with the hardware (31 and 32), but **do not** fully tighten the capscrews until after the impeller has been installed as follows.

(Figure 1)

Inspect impeller (2), and replace if cracked or badly worn. The wear rings (15) are an integral part of the impeller. If the wear rings are badly worn, the entire impeller must be replaced or returned to the factory for wear ring replacement.

Install the impeller key (6) and slide the impeller onto the shaft. Immobilize the impeller, and secure it with the impeller tabwasher (7) and the impeller nut (14). **Do not** bend the washer tabs over the impeller nut at this time.

Before fully securing the body cover, turn the shaft to check for rubbing of the inboard impeller wear ring against the body cover. If the wear ring rubs, tap the body cover with a mallet until the impeller rotates freely. Secure the body cover in this position by tightening the long capscrews (31, Figure 2).

NOTE

Fully tighten six of the long capscrews (31, Figure 2) before replacing the two 7/16 capscrews used to temporarily hold the group grind.

After the body cover is fully secured, bend the tabs of the washer (7) over the impeller nut.

Measure the length of the dowel pins. Use the existing dowel pin holes in the bearing housing as guides to drill and ream two new dowel pin holes (.312 inch finished diameter) through the center plate. The holes should be just deep enough so the pins will be **flush** with the bearing housing when installed. **Do not** drill through the body cover. Be careful not to damage the holes in the bearing housing or body cover with the drill bit or reamer. Install the dowel pins in the new holes.

Refer to **Priming Pump Group Grind Check** in Section C, and check operation.

Install the pressure regulating spring, spring cap gasket, and spring cap (19, 20 and 21, Figure 2).

Before operation, lubricate the rotor blades as indicated in **PRIMING**, Section C.

Final Pump Reassembly

(Figure 1)

Install the pump casing gasket (17).

Install the assembled bearing housing, body cover, and group grind in the pump casing and secure with the nuts (19). Secure the support (20) to the base, and secure the bearing housing to the support with the hardware (21, 22 and 23).

Install the pipe nipple, check valve, and male elbow (3, 4 and 5, Figure 2) in the bearing housing and connect the priming tube assembly (13) to the male elbow and system check valve (not shown).

Install the connector (2) in the center plate and connect the suction tube assembly (10) to the connector and pump casing.

Install the drive shaft key (3), coupling, power source and guards.

LUBRICATION

Seal Assembly

The seal assembly is lubricated by the medium being pumped.

Group Grind

When starting the pump for the first time or if the pump has not been used for a long period of time, refer to **Priming**, Section C. In normal operation, the group grind is lubricated by the medium being pumped.

Bearings

The bearing housing was fully lubricated when shipped from the factory. Check the oil level regularly through the oil cup and maintain it at the top of the cup. When lubrication is required, remove the air vent fitting (13, Figure 2) and add SAE No. 30 non-detergent oil through the hole. **Do not** over-lubricate. Over-lubrication can cause the bearings to over-heat, resulting in premature bearing failure.

Under normal conditions, drain the bearing housing once each year and refill with clean oil. Change the oil more frequently if the pump is operated continuously or installed in an atmosphere with rapid temperature change.

CAUTION

Monitor the condition of the bearing lubricant regularly for evidence of rust or moisture condensation. This is especially important in areas where variable hot and cold temperatures are common.

For cold weather operation, consult the factory or a lubricant supplier for the recommended grade of oil.

For U.S. and International Warranty Information,
Please Visit www.grpumps.com/warranty
or call:
U.S.: 419—755—1280
International: +1—419—755—1352

For Canadian Warranty Information,
Please Visit www.grcanada.com/warranty
or call:
519—631—2870

THE GORMAN-RUPP COMPANY ● MANSFIELD, OHIO
GORMAN-RUPP OF CANADA LIMITED ● ST. THOMAS, ONTARIO, CANADA