# INSTALLATION, OPERATION, AND MAINTENANCE MANUAL

## WITH PARTS LIST

GORMAN-RUPP

## 60 SERIES PUMPS

MODEL

**66B2-4031C**

THE GORMAN-RUPP COMPANY • MANSFIELD, OHIO
GORMAN-RUPP OF CANADA LIMITED • ST. THOMAS, ONTARIO, CANADA Printed In U.S.A.
©Copyright by the Gorman-Rupp Company

TABLE OF CONTENTS


INTRODUCTION . . . . . I-1

WARNINGS - SECTION A . . . . . A-1

INSTALLATION - SECTION B . . . . . B-1
- Pump Dimensions . . . . . B-1
- PREINSTALLATION INSPECTION . . . . . B-2
- POSITIONING PUMP . . . . . B-3
  - Lifting . . . . . B-3
  - Mounting . . . . . B-3
- SUCTION AND DISCHARGE PIPING . . . . . B-4
  - Materials . . . . . B-4
  - Line Configuration . . . . . B-4
  - Connections to Pump . . . . . B-4
  - Gauges . . . . . B-4
- SUCTION LINES . . . . . B-4
  - Fittings . . . . . B-5
  - Strainers . . . . . B-5
  - Sealing . . . . . B-5
  - Suction Lines In Sumps . . . . . B-5
  - Suction Line Positioning . . . . . B-6
- DISCHARGE LINES . . . . . B-6
  - Siphoning . . . . . B-6
  - Valves . . . . . B-7
- ALIGNMENT . . . . . B-7

OPERATION - SECTION C . . . . . C-1
- PRIMING . . . . . C-1
  - Hand-Operated Priming Pump . . . . . C-1
- STARTING . . . . . C-2
- OPERATION . . . . . C-3
  - Leakage . . . . . C-3
  - Liquid Temperature And Overheating . . . . . C-3
  - Strainer Check . . . . . C-3
  - Pump Vacuum Check . . . . . C-4
- STOPPING . . . . . C-4
  - Cold Weather Preservation . . . . . C-4
- BEARING TEMPERATURE CHECK . . . . . C-5

PUMP TROUBLESHOOTING - SECTION D . . . . . D-1

PUMP MAINTENANCE AND REPAIR - SECTION E . . . . . E-1
- PERFORMANCE CURVE . . . . . E-1
- PUMP MODEL - PARTS LIST . . . . . E-3
- PUMP END ASSY - PARTS LIST . . . . . E-5
- PUMP AND SEAL DISASSEMBLY AND REASSEMBLY . . . . . E-6
  - Suction Head Removal . . . . . E-6
  - Impeller Removal . . . . . E-7
  - Seal Removal And Disassembly . . . . . E-7
  - Separating Pump And Intermediate From Engine . . . . . E-8
  - Shaft And Bearing Removal And Disassembly . . . . . E-8
  - Shaft and Bearing Reassembly And Installation . . . . . E-9
  - Securing Pump And Intermediate To Engine . . . . . E-11
  - Seal Reassembly And Installation . . . . . E-11
  - Impeller Installation . . . . . E-13
  - Suction Head Installation . . . . . E-14
  - Final Pump Reassembly . . . . . E-15
- LUBRICATION . . . . . E-15
  - Seal Assembly . . . . . E-15
  - Bearings . . . . . E-16
- ENGINE . . . . . E-16

# INTRODUCTION

This Installation, Operation, and Maintenance Manual is designed to help you achieve the best performance and longest life from your Gorman-Rupp pump.

This pump is a 60 Series, centrifugal model with an enclosed impeller. This pump is designed for high pressure distribution of clean liquids containing specified entrained solids. The basic material of construction for wetted parts is gray iron, with a gray iron impeller and brass wearing parts. Be sure the liquid being pumped is compatible with these materials.

If there are any questions regarding the pump or its application which are not covered in this manual or in other literature accompanying this unit, please contact your Gorman-Rupp distributor, or write:

| | | |
|---|---|---|
| The Gorman-Rupp Company<br>P.O. Box 1217<br>Mansfield, Ohio 44901-1217 | or | Gorman-Rupp of Canada Limited<br>70 Burwell Road<br>St. Thomas, Ontario N5P 3R7 |

For information or technical assistance on the engine, contact the engine manufacturer's local dealer or representative.

The following are used to alert maintenance personnel to procedures which require special attention, to those which could damage equipment, and to those which could be dangerous to personnel:

**NOTE**

Instructions to aid in installation, operation, and maintenance or which clarify a procedure.

**CAUTION**

Instructions which must be followed to avoid causing damage to the product or other equipment incidental to the installation. These instructions describe the requirements and the possible damage which could result from failure to follow the procedures.

**WARNING**

These instructions must be followed to avoid causing injury or death to personnel, and describe the procedure required and the injury which could result from failure to follow the procedure.

## WARNINGS - SECTION A

**THESE WARNINGS APPLY TO 60 SERIES ENGINE DRIVEN PUMPS. REFER TO THE MANUAL ACCOMPANYING THE ENGINE BEFORE ATTEMPTING TO BEGIN OPERATION.**

### WARNING

Before attempting to open or service the pump:

1. Familiarize yourself with this manual.
2. Switch off the engine ignition and remove the key to ensure that the pump will remain inoperative.
3. Allow the pump to cool if overheated.
4. Vent the pump slowly and cautiously.
5. Close the suction and discharge valves.
6. Check the temperature before opening any covers, plates, or plugs.
7. Drain the pump.

### WARNING

This pump is designed to handle clean liquids containing specified entrained solids. Do not attempt to pump volatile, corrosive, or flammable liquids which may damage the pump or endanger personnel as a result of pump failure.

### WARNING

After the pump has been installed, make certain that the pump and all piping or hose connections are tight, properly supported and secure before operation.

### WARNING

Do not operate the pump against a closed discharge valve for long periods of time. This could bring the liquid to a boil, build pressure, and cause the pump to rupture or explode.

**WARNING**

Fuel used by internal combustion engines presents an extreme explosion and fire hazard. Make certain that all fuel lines are securely connected and free of leaks. Never refuel a hot or running engine. Avoid overfilling the fuel tank. Always use the correct type of fuel.

**WARNING**

Do not operate an internal combustion engine in an explosive atmosphere. When operating internal combustion engines in an enclosed area, make certain that exhaust fumes are piped to the outside. These fumes contain carbon monoxide, a deadly gas that is colorless, tasteless, and odorless.

**WARNING**

Overheated pumps can cause severe burns and injury. If overheating of the pump occurs:

1. Stop the pump immediately.
2. Allow the pump to cool.
3. Refer to instructions in this manual before restarting the pump.

**WARNING**

Do not remove plates, covers, gauges, pipe plugs, or fittings from an overheated pump. Vapor pressure within the pump can cause parts being disengaged to be ejected with great force. Allow the pump to cool before servicing.

**WARNING**

Never tamper with the governor to gain more power. The governor establishes safe operating limits that should not be exceeded. The maximum continuous operating speed for this unit is 1800 RPM.

**WARNING**

Use lifting and moving equipment in good repair and with adequate capacity to prevent injuries to personnel or damage to equipment. The bail is intended for use in lifting the pump assembly only. Suction and discharge hoses and piping MUST be removed from the pump when lifting the pump by the bail.

## INSTALLATION - SECTION B

Since pump installations are seldom identical, this section offers only general recommendations and practices required to inspect, position, and arrange the pump and piping.

Most of the information pertains to a standard **static lift application** where the pump is positioned above the free level of liquid to be pumped.

If installed in a **flooded suction application** where the liquid is supplied to the pump under pressure, some of the information such as mounting, line configuration, and priming must be tailored to the specific application. Since the pressure supplied to the pump is critical to performance and safety, **be sure** to limit the incoming pressure to 50% of the maximum permissible operating pressure as shown on the pump performance curve. (See Section E, Page 1). If the pump is fitted with a Gorman-Rupp double grease lubricated seal, the maximum incoming pressure must be reduced to 10 p.s.i..

For further assistance, contact your Gorman-Rupp distributor or the Gorman-Rupp Company.

### Pump Dimensions

**See Figure 1 for the approximate physical dimensions of this pump and engine.**

OUTLINE DRAWING

INCHES
[MILLIMETERS]

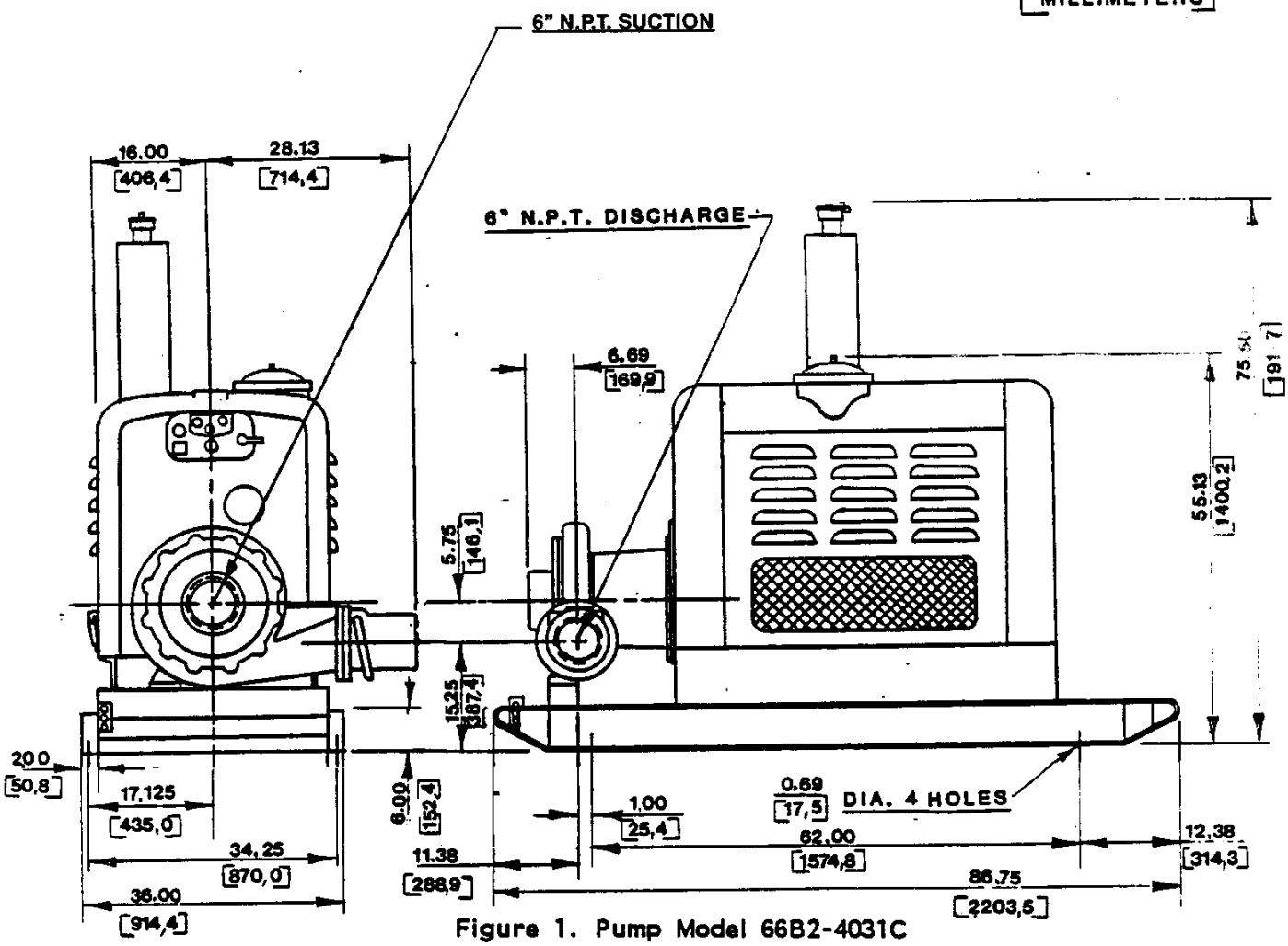


Figure 1. Pump Model 66B2-4031C

## PREINSTALLATION INSPECTION

The pump assembly was inspected and tested before shipment from the factory. Before installation, inspect the pump for damage which may have occurred during shipment. Check as follows:

a. Inspect the pump and engine for cracks, dents, damaged threads, and other obvious damage.

b. Check for and tighten loose bolts, nuts, capscrews, and other attaching hardware. Since gaskets tend to shrink after drying, check for and tighten loose nuts and capscrews securing mating surfaces.

c. Carefully read all tags, decals, and markings on the pump assembly, and follow the instructions indicated.

d. Check all lubricant levels and lubricate as necessary. Refer to LUBRICATION in the MAINTENANCE AND REPAIR section of this manual and perform duties as instructed.

e. If the pump and engine have been stored for more than 12 months, some of the components or lubricants may have exceeded their maximum shelf life. These **must be inspected or replaced** to ensure maximum pump service.

If the maximum shelf life has been exceeded, or if anything appears to be abnormal, contact your Gorman-Rupp distributor or the factory to determine the repair or updating policy. **Do not** put the pump into service until appropriate action has been taken.

## POSITIONING PUMP

### Lifting

Use lifting equipment with a capacity of a least **14,800 pounds**. This pump weighs approximately **2,958 pounds**, not including the weight of accessories and wheel kit. Customer installed equipment such as suction and discharge hoses **must** be removed before attempting to lift.

**CAUTION**

The pump assembly can be seriously damaged if the cables or chains used to lift and move the unit are improperly wrapped around the pump.

### Mounting

Locate the pump in an accessible place as close as practical to the liquid being pumped. Level mounting is essential for proper operation. The pump may have to be supported or shimmed to provide for level operation or to eliminate vibration.

To ensure sufficient lubrication and fuel supply to the engine, **do not** position the pump and engine more than 15° off horizontal for continuous operation. The pump and engine may be positioned up to 30° off horizontal for **intermittant operation only**; however, the engine manufacturer should be consulted for continuous operation at angles greater than 15°.

If the pump has been mounted on a moveable base, make certain the base is stationary by setting the brake and blocking the wheels before attempting to operate the pump.

## SUCTION AND DISCHARGE PIPING

### Materials

Either pipe or hose may be used for suction and discharge lines; however, the materials must be compatible with the liquid being pumped. If hose is used in suction lines, it must be the rigid-wall, reinforced type to prevent collapse under suction. Using piping couplings in suction lines is not recommended.

### Line Configuration

Keep suction and discharge lines as straight as possible to minimize friction losses. Make minimum use of elbows and fittings, which substantially increase friction loss. If elbows are necessary, use the long-radius type to minimize friction loss.

### Connections to Pump

Before tightening a connecting flange, align it exactly with the pump port. Never pull a pipe line into place by tightening the flange bolts and/or couplings.

Lines near the pump must be independently supported to avoid strain on the pump which could cause excessive vibration, decreased bearing life, and increased shaft and seal wear. If hose-type lines are used, they should have adequate support to secure them when filled with liquid and under pressure.

### Gauges

Most pumps are drilled and tapped for installing discharge pressure and vacuum suction gauges. If these gauges are desired for pumps that are not tapped, drill and tap the suction and discharge lines not less than 18 inches from the suction and discharge ports and install the lines. Installation closer to the pump may result in erratic readings.

## SUCTION LINES

To avoid air pockets which could affect pump priming, the suction line must be as short and direct as possible. When operation involves a suction lift, the line must always slope upward to the pump from the source of the liquid being pumped; if the line slopes down to the pump at any point along the suction run, air pockets will be created.

## Fittings

Suction lines should be the same size as the pump inlet. If reducers are used in suction lines, they should be the eccentric type, and should be installed with the flat part of the reducers uppermost to avoid creating air pockets. Valves are not normally used in suction lines, but if a valve is used, install it with the stem horizontal to avoid air pockets.

## Strainers

If a strainer is furnished with the pump, be certain to use it; any spherical solids which pass through a strainer furnished with the pump will also pass through the pump itself.

If a strainer is not furnished with the pump, but is installed by the pump user, make certain that the total area of the openings in the strainer is at least three or four times the cross section of the suction line, and that the openings will not permit passage of solids larger than the solids handling capability of the pump.

This pump is designed to handle up to 11/16 inch diameter spherical solids.

## Sealing

Since even a slight leak will affect priming, head, and capacity, especially when operating with a high suction lift, all connections in the suction line should be sealed with pipe dope to ensure an airtight seal. Follow the sealant manufacturer's recommendations when selecting and applying the pipe dope. The pipe dope should be compatible with the liquid being pumped.

## Suction Lines In Sumps

If a single suction line is installed in a sump, it should be positioned away from the wall of the sump at a distance equal to one and one-half times the diameter of the suction line.

If there is a liquid flow from an open pipe into the sump, the flow should be kept away from the suction inlet because the inflow will carry air down into the sump, and air entering the suction line will reduce pump efficiency.

If it is necessary to position inflow close to the suction inlet, install a baffle between the inflow and the suction inlet at a distance one and one-half times the diameter of the suction pipe. The baffle will allow entrained air to escape from the liquid before it is drawn into the suction inlet.

If two suction lines are installed in a single sump, the flow paths may interact, reducing the efficiency of one or both pumps. To avoid this, position the suction inlets so that they are separated by a distance equal to at least three times the diameter of the suction pipe.

## Suction Line Positioning

The depth of submergence of the suction line is critical to efficient pump operation. Figure 2 shows recommended minimum submergence vs. velocity.

### NOTE

The pipe submergence required may be reduced by installing a standard pipe increaser fitting at the end of the suction line. The larger opening size will reduce the inlet velocity. Calculate the required submergence using the following formula based on the increased opening size (area or diameter).

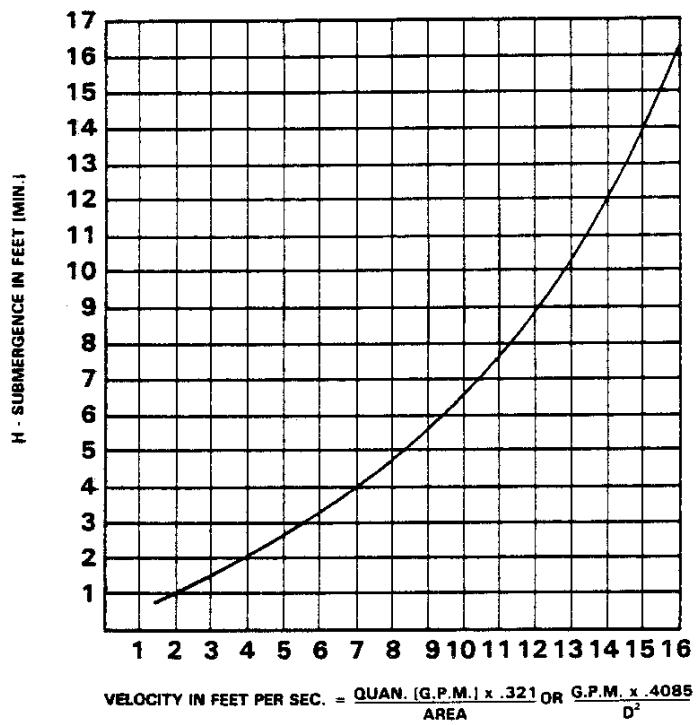


**Figure 2. Recommended Minimum Suction Line Submergence Vs. Velocity**

## DISCHARGE LINES

### Siphoning

Do not terminate the discharge line at a level lower than that of the liquid being pumped unless a siphon breaker is used in the line. Otherwise, a siphoning action causing damage to the pump could result.

## Valves

The spring loaded check valve provided with this pump will **not** function as a discharge check valve in system piping. It is intended to prevent recirculation of air during the priming cycle.

If a throttling valve is desired in the discharge line, use a valve as large as the largest pipe to minimize friction losses. Never install a throttling valve in a suction line.

With high discharge heads, it is recommended that a throttling valve and a system check valve be installed in the discharge line to protect the pump from excessive shock pressure and reverse rotation when it is stopped.

**CAUTION**

> If application involves a high discharge head, gradually close the discharge throttling valve before stopping the pump.

## ALIGNMENT

The alignment of the pump and the engine is critical for trouble free mechanical operation. See Section E, **Securing Pump And Intermediate To Engine** for detailed information.

# OPERATION - SECTION C

**WARNING**

This pump is designed to handle clean liquids containing specified entrained solids. Do not attempt to pump volatile, corrosive, or flammable liquids which may damage the pump or endanger personnel as a result of pump failure.

**WARNING**

Never tamper with the governor to gain more power. The governor establishes safe operating limits that should not be exceeded. The maximum continuous operating speed for this unit is 1800 RPM.

## PRIMING

Install the pump and piping as described in **INSTALLATION**. Make sure that the piping connections are tight, and that the pump is securely mounted. Check that the pump is properly lubricated (see **LUBRICATION** in **MAINTENANCE AND REPAIR**).

Since this pump is not self-priming, it is equipped with a hand-operated vacuum priming pump, and a spring-loaded check valve.

### Hand-Operated Priming Pump

The hand-operated priming pump (see Figure 1) is designed to draw air out of the suction line and the pump casing.

The hand-operated priming pump can be used while the pump is either stopped or operating.

Close the discharge line throttling valve and spring-loaded check valve before engaging the priming device.

To prime the pump, open the cock in the bottom of the priming pump. Operate the handle of the pump until all of the air is expelled from the line and a small amount of liquid flows from the drain cock.

NOTE

For installation and operating instructions on the discharge check valve, see the separate check valve manual accompanying this literature.

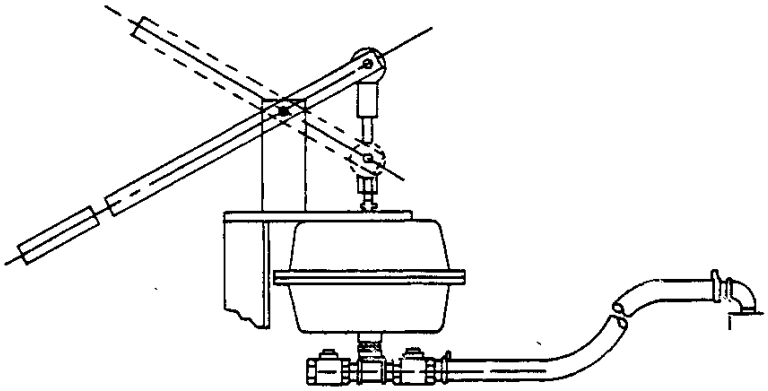

Figure 1. Hand Primer Assembly

Once the pump is fully primed, close the cock, open the discharge line throttling valve and start the pump.

## STARTING

Consult the operations manual furnished with the engine.

NOTE

This pump is equipped with a safety shut down device to terminate engine operation if pump discharge pressure falls below 30 psi. During engine start up, the button on the discharge pressure gauge must be depressed to over-ride this safety feature.

## OPERATION

**CAUTION**

Pump speed and operating condition points must be within the continuous performance range shown on the curve. See Section E, Page 1.

### Leakage

No leakage should be visible at pump mating surfaces, or at pump connections or fittings. Keep all line connections and fittings tight to maintain maximum pump efficiency.

### Liquid Temperature And Overheating

The **maximum** liquid temperature for this pump is 110° F. Do not apply it at a higher operating temperature.

Overheating can occur if operated with the valves in the suction or discharge lines closed. Operating against closed valves could bring the liquid to a boil, build pressure, and cause the pump to rupture or explode. If overheating occurs, stop the pump and allow it to cool before servicing it. Refill the pump casing with cool liquid.

**WARNING**

Do not remove plates, covers, gauges, pipe plugs, or fittings from an overheated pump. Vapor pressure within the pump can cause parts being disengaged to be ejected with great force. Allow the pump to cool before servicing.

### Strainer Check

If a suction strainer has been shipped with the pump or installed by the user, check the strainer regularly, and clean it as necessary. The strainer should also be checked if pump flow rate begins to drop. If a vacuum suction gauge has been installed, monitor and record the readings regularly to detect strainer blockage.

**Never** introduce air or steam pressure into the pump casing or piping to remove a blockage. This could result in personal injury or damage to the equipment. If backflushing is absolutely necessary, **liquid pressure** must be limited to 50% of the maximum permissible operating pressure shown on the pump performance curve. (See Section E, Page 1). If the pump is fitted with a Gorman-Rupp double grease lubricated seal, the maximum incoming pressure must be reduced to 10 p.s.i..

### Pump Vacuum Check

Since this pump does not have a suction check valve, the discharge line must be fitted with a check valve if a pump vacuum reading is to be taken.

With the pump inoperative, install a vacuum gauge in the system, using pipe dope on the threads. Block the suction line and start the pump. At operating speed the pump should pull a vacuum of 20 inches or more of mercury. If it does not, check for air leaks in the seal, gasket, or discharge valve.

Open the suction line, and read the vacuum gauge with the pump primed and at operating speed. Shut off the pump. The vacuum gauge reading will immediately drop proportionate to static suction lift, and should then stabilize. If the vacuum reading falls off rapidly after stabilization, an air leak exists. Before checking for the source of the leak, check the point of installation of the vacuum gauge.

## STOPPING

Never halt the flow of liquid suddenly. If the liquid being pumped is stopped abruptly, damaging shock waves can be transmitted to the pump and piping system. Close all connecting valves slowly. On engine driven pumps, reduce the throttle speed slowly and allow the engine to idle briefly before stopping.

**CAUTION**

> If application involves a high discharge head, gradually close the discharge throttling valve before stopping the pump.

After stopping the pump, switch off the engine ignition and remove the key to ensure that the pump will remain inoperative.

### Cold Weather Preservation

In below freezing conditions, drain the pump to prevent damage from freezing. Also, clean out any solids by flushing with a hose. Operate the pump for approximately one minute; this will remove any remaining liquid that could freeze the pump rotating parts.

If the pump will be idle for more than a few hours, or if it has been pumping liquids containing a large amount of solids, drain the pump, and flush it thoroughly with clean water. To prevent large solids from clogging the drain port and preventing the pump from completely draining, insert a rod or stiff wire in the drain port, and agitate the liquid during the draining process. Clean out any remaining solids by flushing with a hose.

## BEARING TEMPERATURE CHECK

Bearings normally run at higher than ambient temperatures because of heat generated by friction. Temperatures up to 160°F are considered normal for bearings, and they can operate safely to at least 180°F.

Checking bearing temperatures by hand is inaccurate. Bearing temperatures can be measured accurately by placing a contact-type thermometer against the housing. Record this temperature for future reference.

A sudden increase in bearing temperatures is a warning that the bearings are at the point of failing to operate properly. Make certain that the bearing lubricant is of the proper viscosity and at the correct level (see LUBRICATION in MAINTENANCE AND REPAIR). Bearing overheating can also be caused by shaft misalignment and/or excessive vibration.

When pumps are first started, the bearings may seem to run at temperatures above normal. Continued operation should bring the temperatures down to normal levels.

## PUMP TROUBLESHOOTING - SECTION D

**WARNING**

Before attempting to open or service the pump:

1. Familiarize yourself with this manual.
2. Switch off the engine ignition and remove the key to ensure that the pump will remain inoperative.
3. Allow the pump to cool if overheated.
4. Vent the pump slowly and cautiously.
5. Close the suction and discharge valves.
6. Check the temperature before opening any covers, plates, or plugs.
7. Drain the pump.

| TROUBLE | POSSIBLE CAUSE | PROBABLE REMEDY |
|---|---|---|
| PUMP FAILS TO PRIME | Auxiliary priming device faulty or improperly installed. | Repair priming device or check installation. |
| | Air leak in suction line. | Correct leak. |
| | Lining of suction hose collapsed. | Replace suction hose. |
| | Leaking or worn seal or pump gasket. | Check pump vacuum. Replace leaking or worn seal or gasket. |
| | Suction lift or discharge head to high. | Check piping installation and reduce suction lift and/or discharge head. |
| | Strainer clogged. | Check strainer and clean if necessary. |
| PUMP STOPS OR FAILS TO DELIVER RATED FLOW OR PRESSURE | Air leak in suction line. | Correct leak. |
| | Pump speed too high. | Check engine output. |
| | Lining of suction hose collapsed. | Replace suction hose. |
| | Impeller or other wearing parts worn or damaged. | Replace worn or damaged parts. Check that impeller is properly centered and rotates freely. |

| TROUBLE | POSSIBLE CAUSE | PROBABLE REMEDY |
|---|---|---|
| PUMP STOPS OR FAILS TO DELIVER RATED FLOW OR PRESSURE(cont.) | Impeller clogged. | Free impeller of debris. |
| | Pump speed too slow. | Check engine output; consult engine operation manual. |
| | Suction lift too high. | Measure lift w/vacuum gauge. Reduce lift and/or friction losses in suction line. |
| | Strainer clogged. | Check strainer and clean if necessary. |
| | Discharge throttling valve partially closed; check valve installed improperly. | Open discharge valve fully; check piping installation. |
| | Discharge pressure at or below safety shutdown limit. | Check starting instructions; increase pressure. |
| | Discharge check valve locked closed. | Check position of handle; open valve. |
| PUMP REQUIRES TOO MUCH POWER | Discharge head too low. | Adjust discharge valve. |
| | Liquid solution too thick. | Dilute if possible. |
| | Pump speed too high. | Check engine output. |
| PUMP CLOGS FREQUENTLY | Discharge flow too slow. | Open discharge valve fully to increase flow rate, and run engine at maximum governed speed. |
| | Suction check valve or foot valve clogged or binding. | Clean valve. |
| EXCESSIVE NOISE | Cavitation in pump. | Reduce suction lift and/or friction losses in suction line. Record vacuum and pressure gauge readings and consult local representative or factory. |
| | Pumping entrained air. | Locate and eliminate source of air bubble. |
| | Pump or drive not securely mounted. | Secure mounting hardware. |
| | Impeller clogged or damaged. | Clean out debris; replace damaged parts. |

| TROUBLE | POSSIBLE CAUSE | PROBABLE REMEDY |
|---|---|---|
| BEARINGS RUN TOO HOT | Bearing temperature is high, but within limits. | Check bearing temperature regularly to monitor any increase. |
| | Low or incorrect lubricant. | Check for proper type and level of lubricant. |
| | Suction and discharge lines not properly supported. | Check piping installation for proper support. |
| | Drive misaligned. | Align drive properly. |

## PUMP MAINTENANCE AND REPAIR - SECTION E

MAINTENANCE AND REPAIR OF THE WEARING PARTS OF THE PUMP WILL MAINTAIN PEAK OPERATING PERFORMANCE.

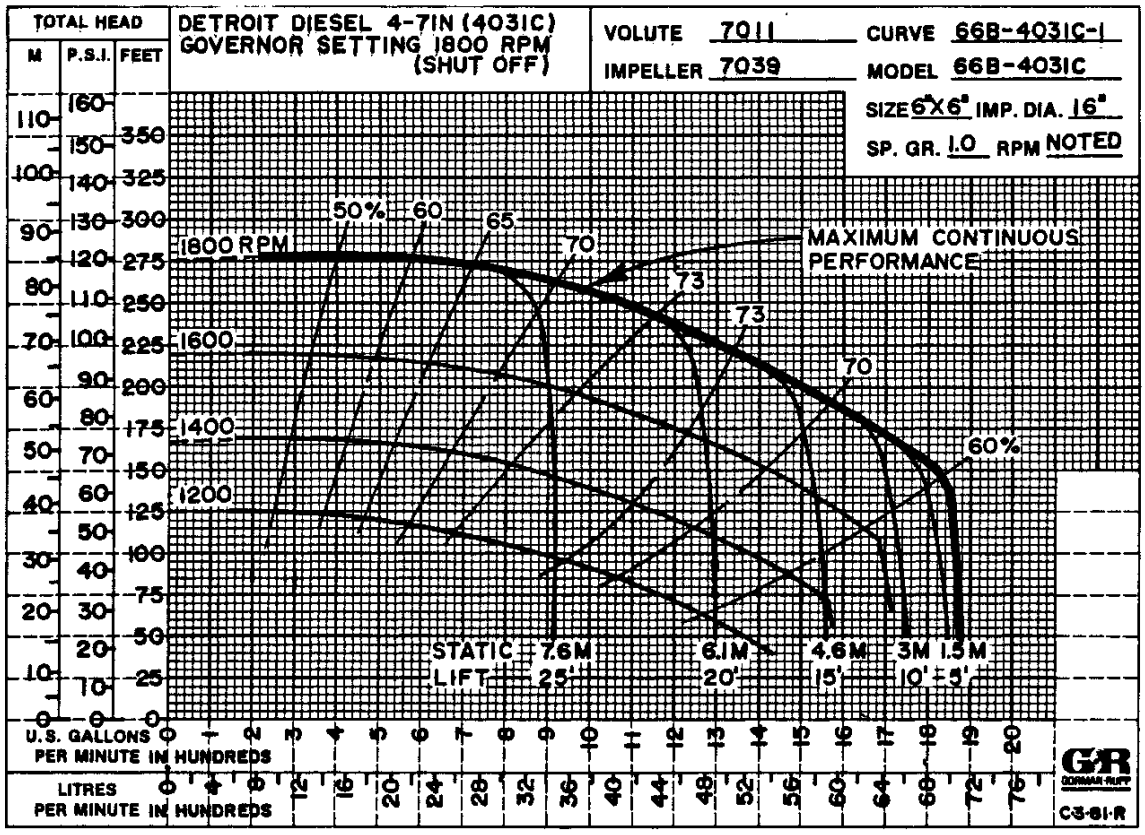


*STANDARD PERFORMANCE FOR PUMP MODEL 66B2-4031C

*Based on 70°F clear water at sea level with minimum suction lift. Since pump installations are seldom identical, your performance may be different due to such factors as viscosity, specific gravity, elevation, temperature, and impeller trim.

If your pump serial number is followed by an "N", your pump is NOT a standard production model. Contact the Gorman-Rupp Company to verify performance or part numbers.

### WARNING

Never tamper with the governor to gain more power. The governor establishes safe operating limits that should not be exceeded. The maximum continuous operating speed for this unit is 1800 RPM.

## SECTIONAL DRAWING

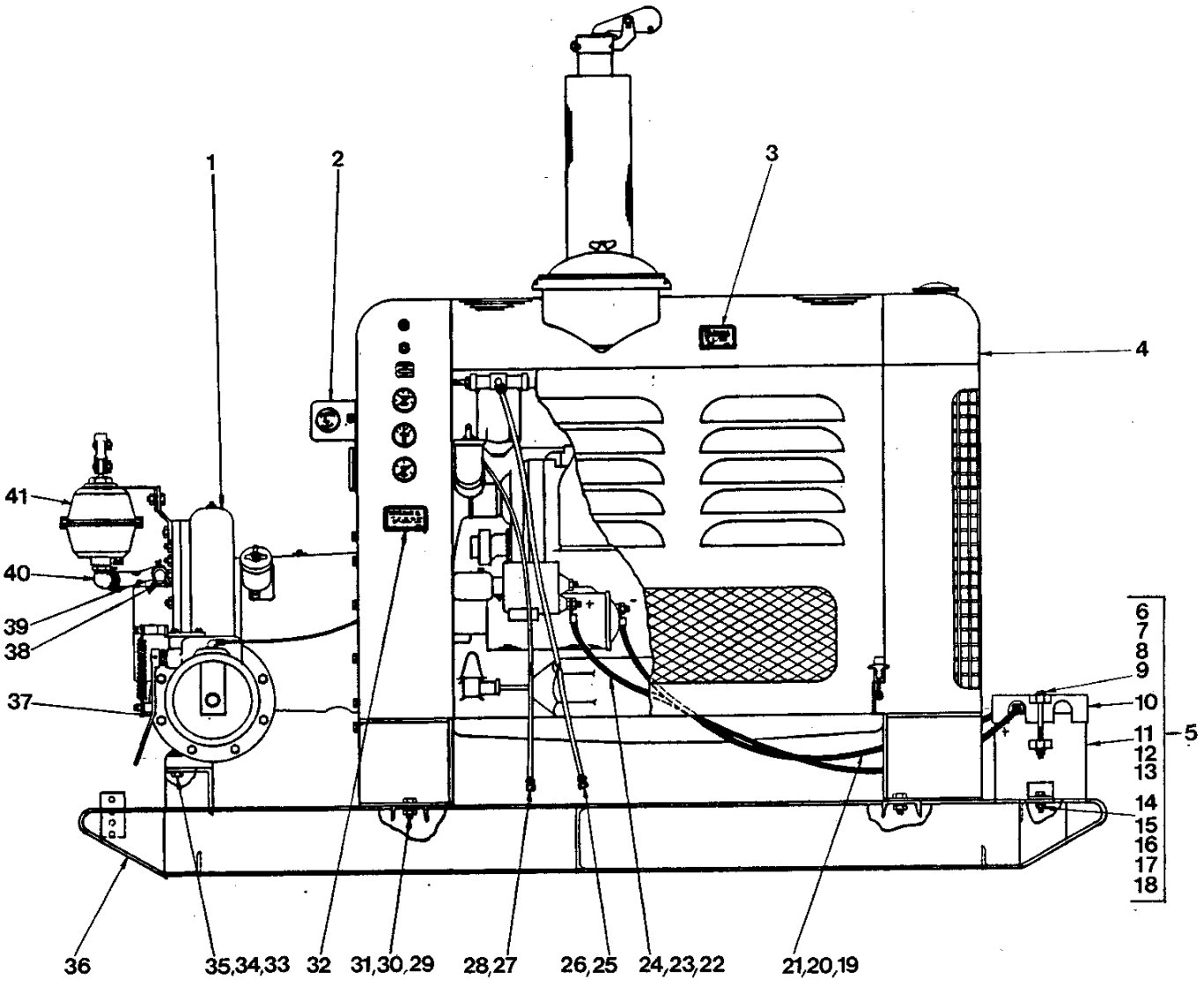


Figure 1. Pump Model 66B2-4031C

## PARTS LIST
### Pump Model 66B2-4031C
(From S/N 835568 up)

If your pump serial number is followed by an "N", your pump is **NOT** a standard production model. Contact the Gorman-Rupp Company to verify part numbers.

| ITEM NO. | PART NAME | PART NUMBER | MATL CODE | QTY |
|---|---|---|---|---|
| 1 | PUMP END ASSY | 66B2 (SEE FIGURE 2) | | 1 |
| 2** | PRESS SWITCH ASSY | 48312-004 | ----- | 1 |
| 3 | WARNING DECAL | 38816-132 | ----- | 2 |
| 4 | GMC 4031C ENGINE | 206-C1 | ----- | 1 |
| 5 | BATTERY BOX ASSY | GRP40-04 | ----- | 1 |
| 6 | -HEX HD CAPSCREW | B00624 | 15991 | 2 |
| 7 | -FLAT WASHER | K00006 | 15991 | 4 |
| 8 | -LOCKWASHER | J00006 | 15991 | 2 |
| 9 | -HEX NUT | D00006 | 15991 | 2 |
| 10 | -BAT BOX COVER | 4896-X | 24000 | 1 |
| 11 | -BATTERY BOX | 10478 | 24000 | 1 |
| 12 * | -BATTERY | S00978 | ----- | 2 |
| 13 * | -CONN CABLE ASSY | 5795-CR | 24040 | 1 |
| 14 | -HEX HD CAPSCREW | B00604 | 15991 | 1 |
| 15 | -HEX HD CAPSCREW | B00605 | 15991 | 1 |
| 16 | -FLAT WASHER | K00006 | 15991 | 2 |
| 17 | -LOCKWASHER | J00006 | 15991 | 2 |
| 18 | -HEX NUT | D00006 | 15991 | 2 |
| 19 | *NEG CABLE | 38741-009 | ----- | 1 |
| 20 | TERMINAL | S01115 | ----- | 1 |
| 21 | SOLDER LUG | S01725 | ----- | 1 |
| 22 | *POS CABLE | 38741-008 | ----- | 1 |
| 23 | TERMINAL | S01115 | ----- | 1 |
| 24 | SOLDER LUG | S01725 | ----- | 1 |
| 25 | FUEL LINE | 12620-C | ----- | 1 |
| 26 | STREET ELBOW | RS00004 | 11990 | 1 |
| 27 | FUEL LINE | 12620-D | ----- | 1 |
| 28 | FEMALE UNION | 26357-024 | ----- | 1 |
| 29 | HEX HD CAPSCREW | B01208 | 15991 | 4 |
| 30 | LOCKWASHER | J00012 | 15991 | 4 |
| 31 | HEX NUT | D00012 | 15991 | 4 |
| 32 | WARNING DECAL | 2613-FE | ----- | 1 |
| 33 | HEX HD CAPSCREW | B01010 | 15991 | 2 |
| 34 | LOCKWASHER | J00010 | 15991 | 2 |
| 35 | HEX NUT | D00010 | 15991 | 2 |
| 36 | COMBINATION BASE | 8689-A | 24000 | 1 |
| 37 | CHECK VALVE ASSY (SEE ACCOMPANYING LITERATURE) | GRP14-03-A | ----- | 1 |
| 38 | REDUCING BUSHING | AP00806 | 11990 | 1 |
| 39 | HOSE | 31412-112 | 19180 | 1 |
| 40 | STREET ELBOW | RS00006 | 11990 | 2 |
| 41 | HAND PRIMER ASSY (SEE ACCOMPANYING LITERATURE) | GRP43-01 | ----- | 1 |
| OPTIONAL: | | | | |
| | WHEEL KIT-2 WHEEL | GRP30-26B | ----- | 1 |
| | WHEEL KIT-4 WHEEL | GRP30-10 | ----- | 1 |
| | COMBINATION BASE | 7618-B | 24000 | 1 |

**CONSULT YOUR LOCAL DISTRIBUTOR OR THE FACTORY FOR INDIVIDUAL PARTS.

*INDICATES PARTS RECOMMENDED FOR STOCK

Above Serial Numbers Do Not Apply To Pumps Made In Canada.

CANADIAN SERIAL NO ..... AND UP

## SECTIONAL DRAWING

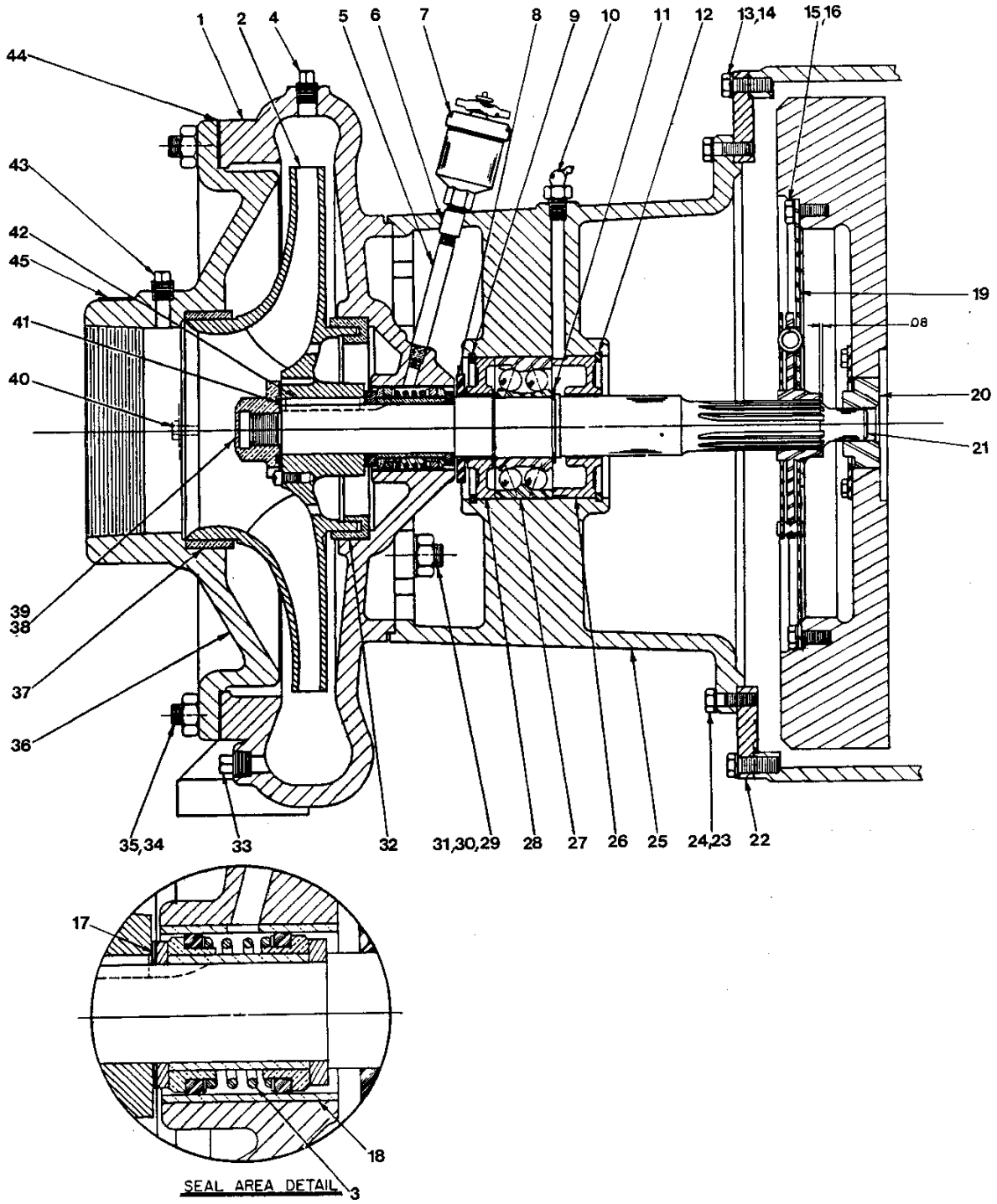


Figure 2. Pump End Assy 66B2-4031C

## PARTS LIST
### Pump End Assy 66B2-4031C

| ITEM NO. | PART NAME | PART NUMBER | MATL CODE | QTY |
|---|---|---|---|---|
| 1 | PUMP CASING | 7011 | 10010 | 1 |
| 2 | *IMPELLER | 7039 | 10010 | 1 |
| 3 | *GREASE SEAL ASSY | GS01500 | ----- | 1 |
| 4 | PIPE PLUG | P00006 | 11990 | 1 |
| 5 | PIPE NIPPLE | THA00418 | 15070 | 1 |
| 6 | PIPE COUPLING | AE00004 | 11990 | 1 |
| 7 | SEAL GREASE CUP | S01509 | ----- | 1 |
| 8 | SLINGER RING | 5053 | 19120 | 1 |
| 9 | RETAINING RING | S01165 | ----- | 1 |
| 10 | LUBE FITTING | S00194 | ----- | 1 |
| 11 | RETAINING RING | S01164 | ----- | 2 |
| 12 | RETAINING RING | S01165 | ----- | 1 |
| 13 | HEX HD CAPSCREW | B00705 | 15991 | 12 |
| 14 | LOCKWASHER | J00007 | 15991 | 12 |
| 15 | HEX HD CAPSCREW | B00604 | 15991 | 8 |
| 16 | LOCKWASHER | J00006 | 15991 | 8 |
| 17 | *IMP ADJ SHIM SET | 5091 | 17090 | REF |
| 18 | *SEAL LINER | 7012 | 14080 | REF |
| 19 | DRIVE PLATE ASSY | 24521-168 | ----- | 1 |
| 20 | PILOT BUSHING | 7619 | 15010 | 1 |
| 21 | *IMPELLER SHAFT | 7021 | 16040 | 1 |
| 22 | ADAPTOR RING | 3319 | 10010 | 1 |
| 23 | HEX HD CAPSCREW | B00605 | 15991 | 12 |
| 24 | LOCKWASHER | J00006 | 15991 | 12 |
| 25 | INTERMEDIATE | 7013-B | 10010 | 1 |
| 26 | BRG RETAINER | 7019 | 10010 | 1 |
| 27 | *BALL BEARING | 23421-461 | ----- | 1 |
| 28 | BRG RETAINER | 7018 | 10010 | 1 |
| 29 | STUD | C01009 | 15991 | 4 |
| 30 | HEX NUT | D00010 | 15991 | 4 |
| 31 | LOCKWASHER | J00010 | 15991 | 4 |
| 32 | *BALANCE RING | 7017 | 14000 | 1 |
| 33 | PIPE PLUG | P00006 | 11990 | 1 |
| 34 | STUD | C01008 | 15991 | 16 |
| 35 | HEX NUT | D00010 | 15991 | 16 |
| 36 | SUCTION HEAD | 7015 | 10010 | 1 |
| 37 | *WEAR RING | 7016 | 14000 | 1 |
| 38 | IMPELLER NUT | 2177-B | 14000 | 1 |
| 39 | FILL HD SCREW | AW00602 | 14990 | 1 |
| 40 | HEX HD CAPSCREW | B00604 | 15991 | 2 |
| 41 | O-RING | S00300 | ----- | 1 |
| 42 | *IMPELLER KEY | N00609 1/2 | 15990 | 1 |
| 43 | PIPE PLUG | P00008 | 11990 | 1 |
| 44 | *SUCT HD GSKT | 926-G | 18000 | 1 |
| 45 | SUCTION STICKER | 6588-AG | 00000 | 1 |
| NOT SHOWN: | | | | |
| | DRIVE SCREW | BM#04-03 | 15990 | 2 |
| | NAME PLATE | 2613-R | 13990 | 1 |
| | STRAINER | S01529 | ----- | 1 |
| | DISCHARGE STICKER | 6588-BJ | 00000 | 1 |
| | PIPE PLUG | P00008 | 11990 | 1 |

*INDICATES PARTS RECOMMENDED FOR STOCK

## PUMP AND SEAL DISASSEMBLY AND REASSEMBLY

This pump requires little service due to its rugged, minimum-maintenance design. However, if it becomes necessary to inspect or replace the wearing parts, follow these instructions which are keyed to the sectional views (see Figures 1 and 2) and the accompanying parts lists.

See the accompanying literature for Installation, Operation and Maintenance of the GRP14-03-A Discharge Check Valve and the GRP43-01 Hand Primer Assembly.

Before attempting to service the pump, switch off the engine ignition and remove the key to ensure that the engine will remain inoperative, and close all valves in the suction and discharge line.

The pump is powered by a four cylinder, 284 cubic inch displacement, Detroit Diesel Allison engine, model 4-71N. For engine disassembly and repair, consult the literature supplied from the manufacturer or contact your local Detroit Diesel Allison representative.

**WARNING**

Before attempting to open or service the pump:

1. Familiarize yourself with this manual.
2. Switch off the engine ignition and remove the key to ensure that the pump will remain inoperative.
3. Allow the pump to cool if overheated.
4. Vent the pump slowly and cautiously.
5. Close the suction and discharge valves.
6. Check the temperature before opening any covers, plates, or plugs.
7. Drain the pump.

**WARNING**

Use lifting and moving equipment in good repair and with adequate capacity to prevent injuries to personnel or damage to equipment.

### Suction Head Removal

**(Figure 2)**

For access to the impeller (2) and seal assembly (3), the suction head (36) must be separated from the pump casing (1).

Remove the suction and discharge piping. Before attempting to service the pump, remove the pump casing drain plug (33) and drain the pump. Clean and reinstall the drain plug.

Remove the hardware securing the hand primer assembly (41, Figure 1) to the pump casing.

**NOTE**

See the accompanying literature for maintenance and repair of the hand primer assembly.

Remove the nuts (35) and use the jacking screws (40) to force the suction head out of the pump casing. Turn the screws evenly to prevent binding. Remove the suction head gasket (44).

Inspect the wear ring (37) for excessive wear or damage. The wear ring is secured in the suction head by a press fit. If replacement is required, use a chisel to cut the ring out of the suction head. **Be careful** not to damage the suction head bore.

## Impeller Removal

### (Figure 2)

Before removing the impeller, turn the cross arm on the automatic lubricating seal grease cup (7) clockwise until it rests against the cover (see Figure 5). This will prevent the grease in the cup from escaping when the impeller is removed.

Remove the fillister head screw (38) and unscrew the impeller nut (39) and O-ring (41). Install two 3/8 - 16 UNC capscrews into the impeller hub and use a gear puller to slide the impeller off the shaft. Retain the impeller key (42).

Remove the impeller adjusting shims (17). For ease of reassembly, tie and tag the shims, or measure and record their thickness.

Inspect the balance ring (32) for excessive wear or damage. The balance ring is secured in the pump casing by a press fit. If replacement is required, use a suitable puller to remove it from the pump casing.

## Seal Removal And Disassembly

### (Figure 2)

Make certain the cross arm on the grease cup has been turned down against the cover before removing the seal assembly.

Carefully remove the rotating elements, stationary seats, packing rings, seal spring, and spacer sleeve from the pump casing. Use a stiff wire with a hooked end if necessary.

Inspect the seal liner (18) for wear or grooves that could cause leakage or damage to the seal rings. The seal liner is secured in the pump casing (1) by a press fit and does not normally require replacement. If the seal liner must be replaced, separate the casing from the intermediate as described in **Shaft And Bearing Removal And Disassembly**. Refer to **Seal Reassembly And Installation** for replacement of the seal liner.

If no further disassembly is required, refer to **Seal Reassembly And Installation.**

## Separating Pump And Intermediate From Engine

**(Figure 2)**

To service the drive assembly, shaft (21) or bearing (23), the pump end must be separated from the base and engine. See Figure 1 and remove the hardware (33, 34 and 35) securing the pump casing to the base.

**NOTE**

> If desired, disengage the hardware securing the discharge check valve assembly (37, Figure 1) and separate the check valve from the pump casing.

Support the pump casing and intermediate using a suitable hoist and sling, and remove the hardware (13 and 14) securing the intermediate and adaptor (22) to the engine bellhousing. Separate the assemblies by pulling the intermediate straight away from the engine. As the assemblies are separated, the impeller shaft (21) will disengage from the drive plate assembly (19).

Tie and tag any leveling shims used under the pump casing mounting feet.

It is not necessary to remove the drive plate assembly from the engine flywheel unless the assembly or the pilot bushing (20) must be replaced. To remove the drive plate assembly, disengage the hardware (15 and 16).

Inspect the pilot bushing for excessive wear or damage. If replacement is required, remove the hardware and retainer plate (supplied with the engine) securing the pilot bushing, and use a suitable puller to remove the bushing from the engine flywheel.

## Shaft And Bearing Removal And Disassembly

**(Figure 2)**

When the pump is properly operated and maintained, the shaft and bearing should not require disassembly. Disassemble the shaft and bearing **only** when there is evidence of wear or damage.

**CAUTION**

> Shaft and bearing disassembly in the field is not recommended. These operations should be performed only in a properly-equipped shop by qualified personnel.

After separating the pump end from the engine, remove the grease cup and piping (5, 6 and 7) from the pump casing. Remove the hardware (30 and 31) and separate

the pump casing from the intermediate. Slide the slinger ring (8) off the shaft.

Use snap ring pliers to remove the retaining rings (9 and 12). Pull the bearing retainers (26 and 28) from the bearing bore. Note the location and position of the parts during disassembly, tie and tag the parts by sets for future reference.

**NOTE**

There are no provisions for draining the grease from the intermediate cavity. Place a drip pan under the intermediate before removing the shaft and bearing.

Place a block of wood against the drive end of the shaft and tap the shaft and assembled bearing from the bearing bore. **Be careful** not to damage the shaft.

Remove the inboard bearing retaining ring (11) and press the bearing (27) from the shaft. It is not necessary to remove the outboard bearing retaining ring from the shaft unless replacement is required.

## Shaft and Bearing Reassembly And Installation

**(Figure 2)**

Clean the intermediate, shaft and all component parts (except the bearing) with a soft cloth soaked in cleaning solvent. Inspect the parts for wear or damage and replace as necessary.

**WARNING**

Most cleaning solvents are toxic and flammable. Use them only in a well-ventilated area free from excessive heat, sparks, and flame. Read and follow all precautions printed on solvent containers.

Inspect the shaft for distortion, nicks or scratches or thread damage on the impeller end. Dress small nicks and burrs with a fine file or emery cloth. Replace the shaft if defective.

Clean the bearing thoroughly in **fresh** cleaning solvent. Dry the bearing with filtered compressed air and coat with light oil.

Rotate the bearing by hand to check for roughness or binding and inspect the bearing balls. If rotation is rough or the bearing balls are discolored, replace the bearing.

**CAUTION**

Bearings must be kept free of all dirt and foreign material. Failure to do so will greatly shorten bearing life. DO NOT spin dry bearings. This may scratch the balls or races and cause premature bearing failure.

The bearing tolerances provide a tight press fit onto the shaft and a snug slip fit into the intermediate. Replace the shaft or intermediate if the proper bearing fit is not achieved.

Pre-pack the bearing by hand (or use a bearing packer if available) with No. 0 lithium base grease until the bearing balls are thoroughly lubricated.

Position the bearing on the shaft with the loading groove facing **toward** the impeller end of the shaft. Press the bearing onto the shaft until it seats squarely against the outboard bearing retaining ring.

**CAUTION**

When installing the bearings onto the shaft, NEVER press or hit against the outer race, balls, or ball cage. Press ONLY on the inner race.

Install the inboard bearing retaining ring.

Install the bearing retainer (28) and retaining ring (9) in the pump side of the bearing bore. **Be sure** the retainer is properly positioned (see Figure 2).

Slide the shaft and assembled bearing into the intermediate bore from the drive end until the bearing seats squarely against the bearing retainer.

**CAUTION**

When installing the shaft and bearings into the bearing bore, push against the outer race. NEVER hit the balls or ball cage.

Position the slotted side of the bearing retainer (26) against the bearing and secure it with the retaining ring (12).

Check the shaft endplay. An acceptable range of .002 to .010 inch of endplay is designed into the intermediate.

Lubricate the bearing cavity as indicated in **LUBRICATION**, Section E.

Before securing the pump casing to the intermediate, inspect the bore of the seal liner for excessive wear or grooves that might cause leakage or damage to

the seal packing rings. If replacement is required, see **Seal Reassembly And Installation**.

Install the slinger ring (8) on the shaft. Carefully position the pump casing over the shaft. **Be careful** not to damage the seal liner or shaft threads. Secure the casing to the intermediate with the hardware (30 and 31).

## Securing Pump And Intermediate To Engine

### (Figure 2)

Apply a thin coating of 'Never-Seez' lubricant to the inside diameter of the pilot bushing (20) and press it into the engine flywheel until it seats against the flywheel shoulder. Secure the bushing with the retainer plate and hardware supplied with the engine.

Secure the drive plate assembly to the flywheel with the hardware (15 and 16).

Slide the shaft splines into the drive plate and secure the intermediate assembly to the engine bellhousing with the hardware (13 and 14).

Be sure to reinstall any leveling shims used under the pump mounting feet before installing the pump casing mounting hardware (33, 34 and 35, Figure 1).

## Seal Reassembly And Installation

### (Figures 2 and 3)

Clean the seal cavity and shaft with a cloth soaked in fresh cleaning solvent.

**WARNING**

Most cleaning solvents are toxic and flammable. Use them only in a well-ventilated area free from excessive heat, sparks, and flame. Read and follow all precautions printed on solvent containers.

The seal is not normally reused because wear patterns on the finished faces cannot be realigned during reassembly. This could result in premature failure. If necessary to reuse an old seal in an emergency, **carefully** wash all metallic parts in fresh cleaning solvent and allow to dry thoroughly.

Handle the seal parts with extreme care to prevent damage. Be careful not to contaminate precision finished faces; even fingerprints on the faces can shorten seal life. If necessary, clean the faces with a non-oil based solvent and a clean lint free tissue. Wipe **lightly** in a concentric pattern to avoid scratching the faces.

Inspect the seal components for wear, scoring, grooves, and other damage that might cause leakage. Clean and polish the seal spacer sleeve, or replace it if

there are nicks or cuts on either end. If any components are worn, replace the complete seal; **never mix old and new seal parts.**

If a replacement seal is being used, remove it from the container and inspect the precision finished faces to ensure that they are free of any foreign matter.

To ease installation of the seal, lubricate the packing rings and seal liner with water or a very **small** amount of oil, and apply a drop of light lubricating oil on the finished faces. Assemble the seal as follows, (see Figure 3).

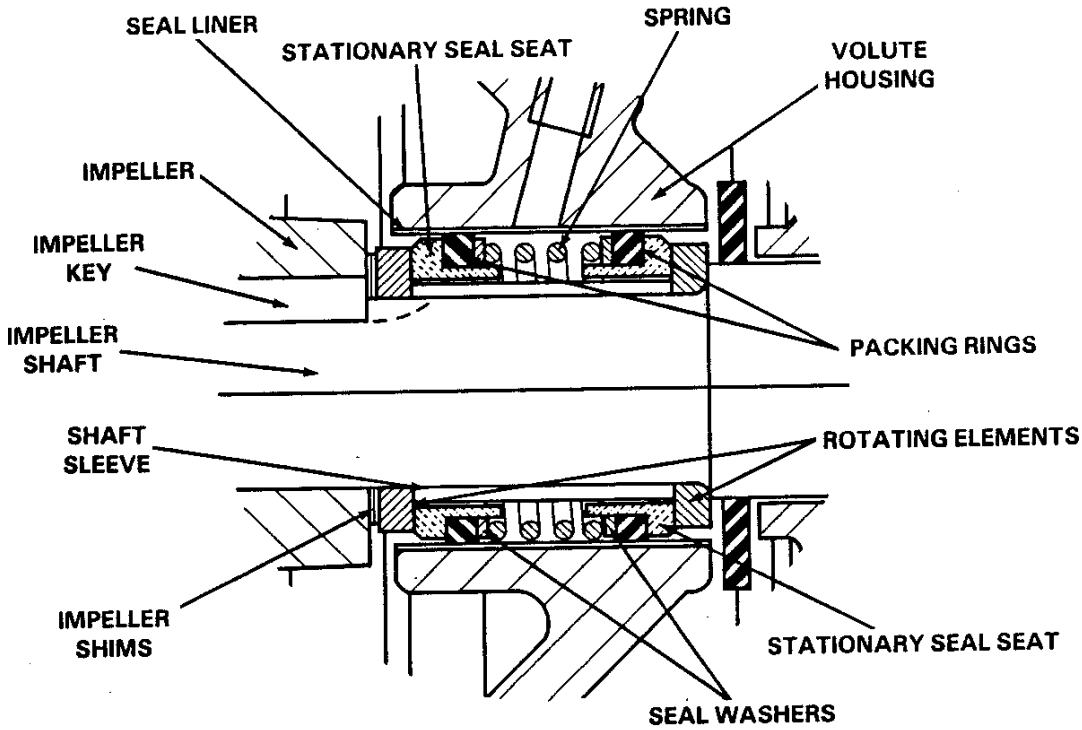


Figure 3. GS01500 Seal Assembly

CAUTION

> This seal is not designed for operation at temperatures above 110°F. Do not use at higher operating temperatures.

Inspect the pump casing, seal liner, and the impeller shaft for burrs or sharp corners, and remove any that exist. Replace the seal liner (18) if wear or grooves exist which could cause leakage or damage to the seal packing rings.

To replace the seal liner, position the pump casing on the bed of an arbor (or hydraulic) press and use a new seal liner to press the old liner out. After the new liner is properly installed, a 1/4 inch diameter hole must be drilled through it to permit the flow of lubricant to the seal assembly. **Be careful** not

to damage the threads in the pump casing when drilling the hole. Deburr the hole from the inside of the seal liner after drilling.

Secure the casing to the intermediate as described in **Shaft And Bearing Reassembly And Installation.**

Slide the inboard rotating element onto the shaft with the chamfered side facing the shaft shoulder.

Subassemble the inboard stationary seat, packing ring, and spring washer and press this subassembly into the lubricated seal liner.

A push tube cut from a length of plastic pipe would aid this installation. The O.D. of the pipe should be approximately the same diameter as the O.D. of the seal spring.

Install the spacer sleeve and spring.

Subassemble the outboard stationary seat, packing ring, and spring washer, and press this subassembly into the lubricated seal liner.

Install the outboard rotating element with chamfered side facing the impeller.

After the impeller has been installed, lubricate the seal as indicated in **LUBRICATION.**

## Impeller Installation

### (Figure 2)

If the balance ring (32) was removed, press the replacement ring into the casing until it seats squarely against the casing shoulder.

**NOTE**

> The balance ring MUST seat squarely in the casing bore; otherwise binding and/or excessive wear will occur as the shaft turns.

Inspect the impeller and replace it if cracked or badly worn. Slide the same thickness of impeller shims as previously removed onto the impeller shaft and install the impeller key (42) and impeller.

For maximum pump efficiency, the impeller vanes must be centered within the volute scroll. Center the impeller by adding or removing adjusting shims.

To verify the impeller positioning, measure the pump casing and impeller as shown in Figure 4. Use these measurements to calculate the required impeller location (dimension E). Add or remove impeller adjusting shims until dimension E is obtained.

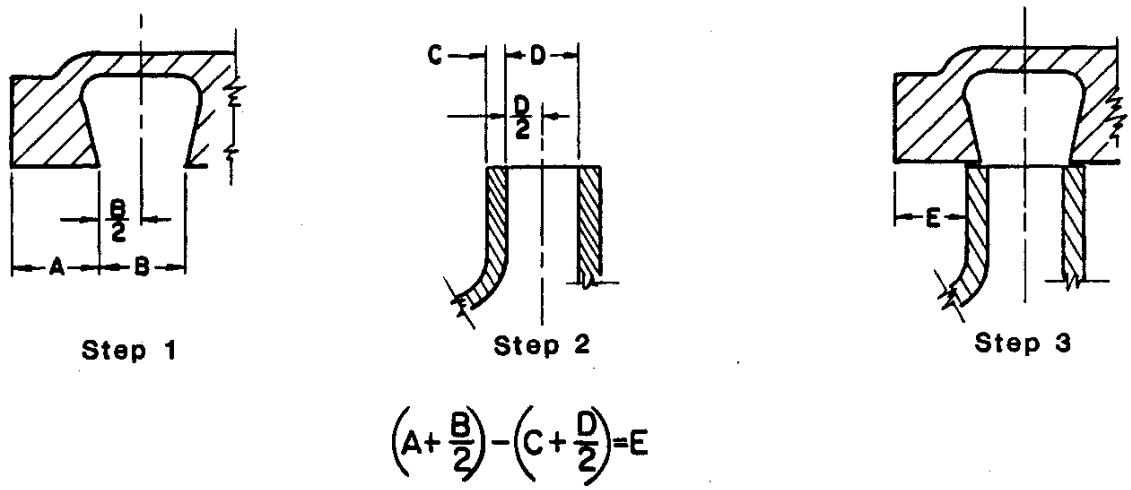


Figure 4. Centering Impeller Within Volute Scroll

NOTE

After the impeller has been properly positioned, check for free rotation. Correct any scraping binding before further reassembly.

- After the impeller is properly positioned, install the impeller nut (38) and O-ring (41) and secure with the fillister head screw (39).

## Suction Head Installation

### (Figure 2)

If removed, position the replacement wear ring (37) in the suction head with the chamfered end toward the suction head bore. Press the wear ring into the suction head until it seats squarely against the bore shoulder.

NOTE

The wear ring MUST seat squarely in the suction head; otherwise binding and/or excessive wear will occur as the shaft turns.

Replace the suction head gasket (44) and secure the suction head to the pump casing with the nuts (35). Make sure the jacking screws (40) do not interfere with the suction head seating.

NOTE

Apply 'Loctite Thread Sealant' (G-R part number 18771-050) or equivalent to the studs before securing.

## Final Pump Reassembly

Turn the shaft to make sure that the impeller is not binding or scraping. If it does, check the installation of the wear ring and balance ring, or remove adjusting shims until the impeller rotates freely when the pump is fully assembled.

Reinstall the automatic grease cup and piping (5, 6 and 7, Figure 2).

Secure the hand primer (41, Figure 1) to the pump casing. If removed, secure the discharge check valve (37, Figure 1) to the pump casing discharge port. Reconnect any instrumentation lines or fittings removed from the check valve or hand primer.

**Be sure** the pump and intermediate are secure to the engine and base.

Install the suction and discharge lines and open all valves in the lines. Make certain that all piping connections are tight, properly supported and secure.

**Be sure** the pump end and engine have been properly lubricated, see **LUBRICATION**.

Before starting the pump, prime the pump using the hand-operated primer (see **OPERATION**, Section C).

# LUBRICATION

## Seal Assembly

Before starting the pump, fill the grease cup through the grease fitting with No. 2 lithium base grease until it escapes from the relief hole. Turn the grease cup arm counterclockwise until it is at the top of the stem; this will release the spring to apply grease to the seal (see Figure 5).

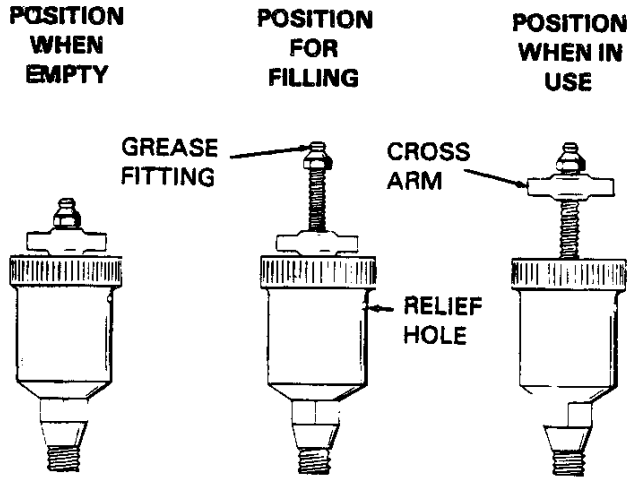


**Figure 5. Automatic Lubricating Grease Cup**

## Bearings

### (Figure 2)

The intermediate was fully lubricated when shipped from the factory. Under normal conditions, add three shots of No. 0 lithium base grease from a grease gun through the grease fitting (10) after each 250 hours of operation or once each month, whichever comes first. **Do not** over-lubricate. Over-lubrication can cause the bearings to over-heat, resulting in premature bearing failure.

**CAUTION**

> If grease is forced out around the shaft as new grease is added, the bearing cavity is full and should be disassembled and cleaned immediately.

There are no provisions in the bearing cavity to drain or flush the lubricant. The pump and intermediate must be disassembled to completely clean and maintain this cavity.

Under normal conditions, change the grease after each 5000 hours of operation, or at 12 month intervals, whichever comes first. Change the grease more frequently if the pump is operated continuously or installed in an environment where variable hot and cold temperatures are common.

When lubricating a dry (overhauled) intermediate, fill the cavity through the lubrication fitting with approximately one quarter of a pound of grease (approximately one-third full).

For cold weather operation, consult the factory or a lubricant supplier for the recommended grade of lubricant.

## ENGINE

Consult the literature supplied with the engine, or contact your local Detroit Diesel Allison representative.

**For U.S. and International Warranty Information,**
**Please Visit www.grpumps.com/warranty**
**or call:**
**U.S.: 419—755—1280**
**International: +1—419—755—1352**

**For Canadian Warranty Information,**
**Please Visit www.grcanada.com/warranty**
**or call:**
**519—631—2870**

THE GORMAN-RUPP COMPANY • MANSFIELD, OHIO
GORMAN-RUPP OF CANADA LIMITED • ST. THOMAS, ONTARIO, CANADA