ACE

OM-01431-OE02
April 11, 1983

60 SERIES

INSTALLATION, OPERATION, PARTS LIST, AND MAINTENANCE MANUAL

MODEL

64B2-F5L

THE GORMAN-RUPP COMPANY • MANSFIELD, OHIO
GORMAN-RUPP OF CANADA LIMITED • ST. THOMAS, ONTARIO, CANADA
Printed in U.S.A.

Copyright by the Gorman-Rupp Company

TABLE OF CONTENTS

INTRODUCTION I-1

WARNINGS - SECTION A A-1

INSTALLATION - SECTION B B-1
Pump Dimensions B-1
PREINSTALLATION INSPECTION B-2
POSITIONING PUMP B-3
Lifting B-3
Mounting B-3
SUCTION AND DISCHARGE PIPING B-3
Materials B-3
Line Configuration B-4
Connections to Pump B-4
Gauges B-4
SUCTION LINES B-4
Fittings B-4
Strainers B-4
Sealing B-5
Suction Lines In Sumps B-5
Suction Line Positioning B-5
DISCHARGE LINES B-6
Siphoning B-6
Valves B-6
ALIGNMENT B-7

OPERATION - SECTION C C-1
PRIMING C-1
Hand-Operated Priming Pump C-2
STARTING C-2
Rotation C-2
OPERATION C-3
Leakage C-3
Liquid Temperature And Overheating C-3
Strainer Check C-4
Pump Vacuum Check C-4
STOPPING C-4
Cold Weather Preservation C-4
BEARING TEMPERATURE CHECK C-5

TROUBLESHOOTING - SECTION D D-1

MAINTENANCE AND REPAIR - SECTION E E-1
PERFORMANCE CURVE E-1
PUMP MODEL - PARTS LIST E-3
PUMP END ASSY - PARTS LIST E-5
DRIVE ASSEMBLY - PARTS LIST E-7
PUMP AND SEAL DISASSEMBLY AND REASSEMBLY E-8
Pump Disassembly E-8
Seal Disassembly E-9
Pump Separation From Engine E-9
Impeller Shaft And Bearing Disassembly E-10
Impeller Shaft And Bearing Reassembly E-10
Attaching Pump To Engine E-12
Seal Reassembly E-12
Pump Reassembly E-15
Final Pump Reassembly E-15
LUBRICATION E-15
Seal Assembly E-15
Bearings E-16
ENGINE E-16

INTRODUCTION

This Installation, Operation, and Maintenance Manual is designed to help you achieve the best performance and longest life from your Gorman-Rupp pump.

This pump is a 60 Series, centrifugal model with an enclosed impeller. This pump is designed for liquids that do not contain large entrained solids for high pressure distribution. The basic material of construction is gray iron with gray iron impeller and brass wearing parts.

If there are any questions regarding the pump or its application which are not covered in this manual or in other literature accompanying this unit, please contact your Gorman-Rupp distributor, or write:

The Gorman-Rupp Company
P.O. Box 1217
Mansfield, Ohio 44901

or

Gorman-Rupp of Canada Limited
70 Burwell Road
St. Thomas, Ontario N5P 3R7

For information or technical assistance on the engine, contact the engine manufacturer's local dealer or representative.

The following are used to alert maintenance personnel to procedures which require special attention, to those which could damage equipment, and to those which could be dangerous to personnel:

NOTE

Instructions to aid in installation, operation, and maintenance or which clarify a procedure.

CAUTION

Instructions which must be followed to avoid causing damage to the product or other equipment incidental to the installation. These instructions describe the requirements and the possible damage which could result from failure to follow the procedures.

WARNING

These instructions must be followed to avoid causing injury or death to personnel, and describe the procedure required and the injury which could result from failure to follow the procedure.

WARNINGS - SECTION A

THESE WARNINGS APPLY TO 60 SERIES ENGINE DRIVEN PUMPS. REFER TO THE MANUAL ACCOMPANYING THE ENGINE BEFORE ATTEMPTING TO BEGIN OPERATION.

WARNING

Before attempting to open or service the pump:

1. Familiarize yourself with this manual.
2. Disconnect the engine to ensure that the pump will remain inoperative.
3. Allow the pump to cool if overheated.
4. Vent the pump slowly and cautiously.
5. Close the suction and discharge valves.
6. Check the temperature before opening any covers, plates, or plugs.
7. Drain the pump.

WARNING

This pump is designed to pump most liquids which do not contain large entrained solids. Do not attempt to pump volatile, corrosive, or flammable liquids which may damage the pump or endanger personnel as a result of pump failure.

WARNING

After the pump has been installed, make certain that the pump and all piping or hose connections are secure before operation.

WARNING

Do not operate the pump against a closed discharge valve for long periods of time. This could bring the liquid to a boil, build pressure, and cause the pump to rupture or explode.

WARNING

Do not remove plates, covers, gauges, pipe plugs, or fittings from an overheated pump. Vapor pressure within the pump can cause parts being disengaged to be ejected with great force. Allow the pump to cool before servicing.

WARNING

Do not operate an internal combustion engine in an explosive atmosphere. When operating internal combustion engines in an enclosed area, make certain that exhaust fumes are piped to the outside. These fumes contain carbon monoxide, a deadly gas that is colorless, tasteless, and odorless.

WARNING

Never tamper with the governor to gain more power. The governor establishes safe operating limits that should not be exceeded. The maximum continuous operating speed of this unit is 2300 RPM.

WARNING

Fuel used by internal combustion engines presents an extreme explosion and fire hazard. Make certain that all fuel lines are securely connected and free of leaks. Never refuel a hot or running engine. Avoid overfilling the fuel tank. Always use the correct type of fuel.

WARNING

Use lifting and moving equipment in good repair and with adequate capacity to prevent injuries to personnel or damage to equipment. The bail is intended for use in lifting the pump assembly only; disconnect suction and discharge hoses and piping from the pump when lifting the pump by the bail.

INSTALLATION - SECTION B

Since pump installations are seldom identical, this section offers only general recommendations and practices required to inspect, position, and arrange the pump and piping.

Most of the information pertains to a standard **static lift application** where the pump is positioned above the free level of liquid to be pumped.

If installed in a **flooded suction application** where the liquid is supplied to the pump under pressure, some of the information such as mounting, line configuration, and priming must be tailored to the specific application. Since the pressure supplied to the pump is critical to performance and safety, **be sure** to limit the incoming pressure to 50% of the maximum pressure developed by the pump. (See Section E, Page 1.) If the pump is fitted with a Gorman-Rupp double grease lubricated seal, the maximum incoming pressure must be reduced to 10 p.s.i..

For further assistance, contact your Gorman-Rupp distributor or the Gorman-Rupp Company.

Pump Dimensions

See Figure 1 for the approximate physical dimensions of this pump.

OUTLINE DRAWING

DIMENSIONS: INCHES / [MILLIMETERS]

POWERED BY: DEUTZ DIESEL MODEL F5L-912

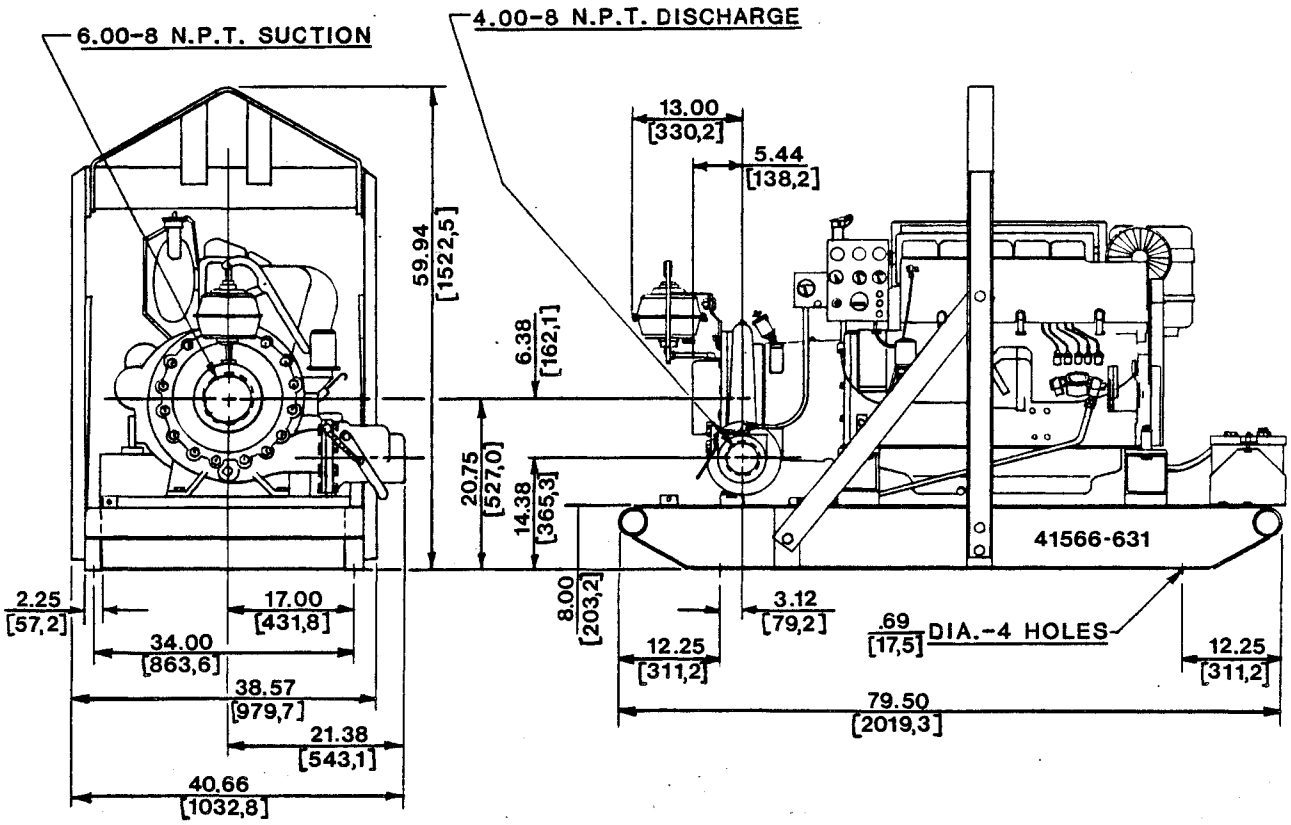

Figure 1. Pump Model 64B2-F5L

PREINSTALLATION INSPECTION

The pump assembly was inspected and tested before shipment from the factory. Before installation, inspect the pump for damage which may have occurred during shipment. Check as follows:

a. Inspect the pump assembly for cracks, dents, damaged threads, and other obvious damage.

b. Check for and tighten loose bolts, nuts, capscrews, and other attaching hardware. Since gaskets tend to shrink after drying, check for and tighten loose nuts and capscrews securing mating surfaces.

c. Carefully read all tags, decals, and markings on the pump assembly, and follow the instructions indicated.

d. Check all lubricant levels and lubricate as necessary. Refer to LUBRICATION in the MAINTENANCE AND REPAIR section of this manual and perform duties as instructed.

e. If the pump and engine have been stored for more than 12 months, some of the components or lubricants may have exceeded their maximum shelf life. These **must be inspected or replaced** to ensure maximum pump service.

If the maximum shelf life has been exceeded, or if anything appears to be abnormal, contact your Gorman-Rupp distributor or the factory to determine the repair or updating policy. **Do not** put the pump into service until appropriate action has been taken.

POSITIONING PUMP

Lifting

Use lifting equipment with a capacity of a least **10,000 pounds**. This pump weighs approximately **2,162 pounds**, not including the weight of accessories and wheel kit.

CAUTION

The pump assembly can be seriously damaged if the cables or chains used to lift and move the unit are improperly wrapped around the pump.

Mounting

Locate the pump in an accessible place as close as practical to the liquid being pumped. Level mounting is essential for proper operation. The pump may have to be supported or shimmed to provide for level operation or to eliminate vibration.

SUCTION AND DISCHARGE PIPING

Materials

Either pipe or hose may be used for suction and discharge lines. Piping materials must be compatible with the liquid being pumped. If hose is used in suction lines, it must be the rigid-wall, reinforced type to prevent collapse under suction. Using piping couplings in suction lines is not recommended.

Line Configuration

Keep suction and discharge lines as straight as possible to minimize friction losses. Make minimum use of elbows and fittings, which substantially increase friction loss. If elbows are necessary, use the long-radius type to minimize friction loss.

Connections to Pump

Before tightening a connecting flange, align it exactly with the pump port. Never pull a pipe line into place by tightening the flange bolts and/or couplings.

Lines near the pump must be independently supported to avoid strain on the pump which could cause excessive vibration, decreased bearing life, and increased shaft and seal wear. If hose-type lines are used, they should have adequate support to secure them when filled with liquid and under pressure.

Gauges

Most pumps are drilled and tapped for installing discharge pressure and vacuum suction gauges. If these gauges are desired for pumps that are not tapped, drill and tap the suction and discharge lines close to the pump before installing the lines.

SUCTION LINES

To avoid air pockets which could affect pump priming, the suction line must be as short and direct as possible. When operation involves a suction lift, the line must always slope upward to the pump from the source of the liquid being pumped; if the line slopes down to the pump at any point along the suction run, air pockets will be created.

Fittings

Suction lines should be the same size as the pump inlet. If reducers are used in suction lines, they should be the eccentric type, and should be installed with the flat part of the reducers uppermost to avoid creating air pockets. Valves are not normally used in suction lines, but if a valve is used, install it with the stem horizontal to avoid air pockets.

Strainers

If a strainer is furnished with the pump, be certain to use it; any spherical solids which pass through a strainer furnished with the pump will also pass

through the pump itself.

If a strainer is not furnished with the pump, but is installed by the pump user, make certain that the total area of the openings in the strainer is at least three or four times the cross section of the suction line, and that the openings will not permit passage of solids larger than the solids handling capability of the pump.

This pump is designed to handle up to .41 inch diameter spherical solids.

Sealing

Since even a slight leak will affect priming, head, and capacity, especially when operating with a high suction lift, all connections in the suction line should be sealed with pipe dope to ensure an airtight seal. The pipe dope should be compatible with the liquid being pumped.

Suction Lines In Sumps

If a single suction line is installed in a sump, it should be positioned away from the wall of the sump at a distance equal to one and one-half times the diameter of the suction line.

If there is a liquid flow from an open pipe into the sump, the flow should be kept away from the suction inlet because the inflow will carry air down into the sump, and air entering the suction line will reduce pump efficiency.

If it is necessary to position inflow close to the suction inlet, install a baffle between the inflow and the suction inlet at a distance one and one-half times the diameter of the suction pipe. The baffle will allow entrained air to escape from the liquid before it is drawn into the suction inlet.

If two suction lines are installed in a single sump, the flow paths may interact, reducing the efficiency of one or both pumps. To avoid this, position the suction inlets so that they are separated by a distance equal to at least three times the diameter of the suction pipe.

Suction Line Positioning

The depth of submergence of the suction line is critical to efficient pump operation. Figure 2 shows recommended minimum submergence vs. velocity.

NOTE

The pipe submergence required may be reduced by installing a standard pipe increaser fitting at the end of the suction line. The larger opening size will reduce the inlet velocity. Calculate the required submergence using the following formula based on the increased opening size (area or diameter).

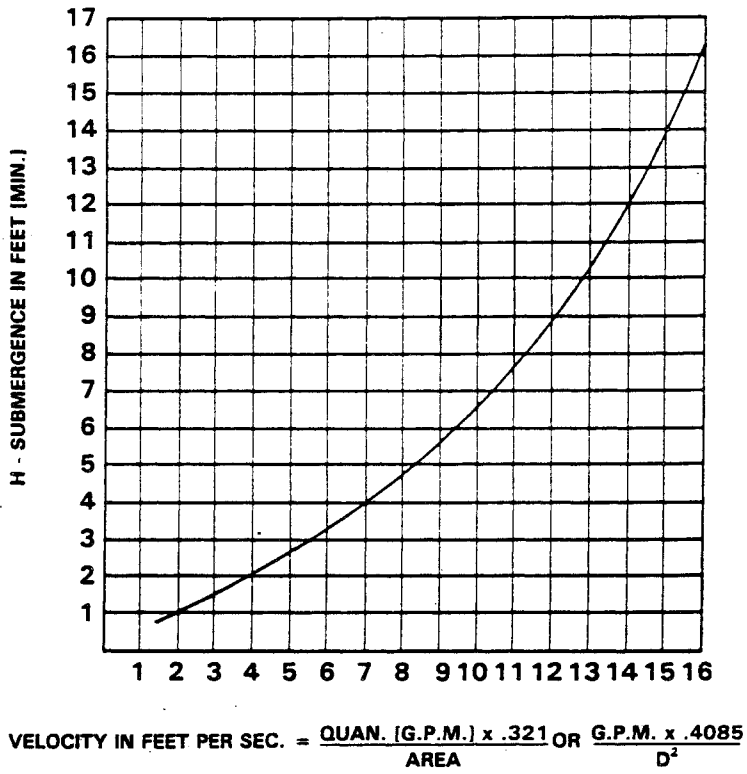

Figure 2. Recommended Minimum Suction Line Submergence Vs. Velocity

DISCHARGE LINES

Siphoning

Do not terminate the discharge line at a level lower than that of the liquid being pumped unless a siphon breaker is used in the line. Otherwise, a siphoning action causing damage to the pump could result.

Valves

If a throttling valve is desired in the discharge line, use a valve as large as the largest pipe in the line to minimize friction losses. Never install a throttling valve in a suction line.

A check valve in the discharge line is normally recommended, but is not necessary in low discharge head applications.

With high discharge heads, it is recommended that a throttling valve and a check valve be installed in the discharge line to protect the pump from excessive shock pressure and reverse rotation when it is stopped.

ALIGNMENT

The alignment of the pump and the engine is critical for trouble free mechanical operation. See Section E, **Attaching Pump To Engine** for detailed information.

OPERATION - SECTION C

WARNING

This pump is designed to pump most liquids which do not contain large entrained solids. Do not attempt to pump volatile, corrosive, or flammable liquids which may damage the pump or endanger personnel as a result of pump failure.

WARNING

Never tamper with the governor to gain more power. The governor establishes safe operating limits that should not be exceeded. The maximum continuous operating speed of this unit is 2300 RPM.

PRIMING

Install the pump and piping as described in INSTALLATION. Make sure that the piping connections are tight, and that the pump is securely mounted. Check that the pump is properly lubricated (see LUBRICATION in MAINTENANCE AND REPAIR).

Since this is not a self-priming pump, it will require an external priming device when installed in a **static lift application**. Many standard centrifugal models are equipped with a hand operated vacuum pump, exhaust primer, or ejector for this purpose. If a priming device was not furnished with the pump, it may be ordered from the factory as an option.

Before attempting to operate the priming device, close the discharge valve. (A spring-loaded type check valve is recommended to provide automatic closing.) Once the pump is fully primed, close the valve between the priming device and pump to preserve the prime. Start the pump and open the discharge valve slowly.

When installed in a **flooded suction application**, simply open the system valves and permit the incoming liquid to evacuate the air. After the pump and piping system have completely filled, evacuate any remaining air pockets in the pump or suction line by loosening pipe plugs or opening bleeder valves.

CAUTION

Never operate this pump unless there is liquid in the pump casing. The pump will not prime when dry. Extended operation of a dry pump will destroy the seal assembly.

Hand-Operated Priming Pump

The hand-operated priming pump, mounted directly on the pump, is designed to draw air out of the suction line and the pump casing.

The hand-operated priming pump can be used while the pump is either stopped or operating.

Close the discharge line throttling valve, and close the spring-loaded check valve before engaging the priming device.

To prime the pump, open the cock in the priming line. Operate the handle of the pump until liquid flows from the check valve (see figure 1).

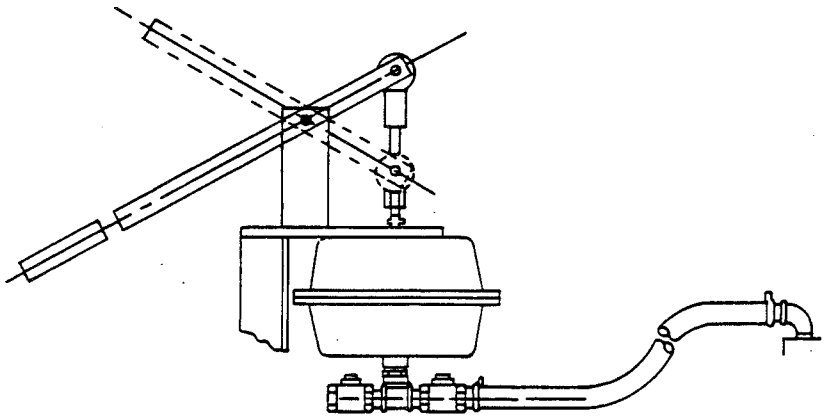

Figure 1. Hand Primer Assembly

Once the pump is fully primed, close the cock in the priming line, and open the spring-loaded check valve.

STARTING

Consult the operations manual furnished with the engine.

Rotation

The correct direction of pump rotation is indicated by an arrow on the pump body, and on the accompanying decal. If the pump is operated in the wrong direction, the impeller could become loosened from the shaft and seriously damage the pump.

CAUTION

Only operate this pump in the direction indicated by the arrow on the pump body and on the accompanying decal. Otherwise, the impeller could become loosened from the shaft and seriously damage the pump.

Consult the operating manual furnished with the engine before attempting to start the engine.

OPERATION

Partially open the discharge throttling valve so that the discharge line fills slowly to prevent damage to piping, gaskets, and other devices in the line which could be affected by shock resulting from rapid filling of the line. When the discharge line is completely filled, adjust the discharge throttling valve to the desired flow rate.

Leakage

No leakage should be visible at pump mating surfaces, or at pump connections or fittings. Keep all line connections and fittings tight to maintain maximum pump efficiency.

Liquid Temperature And Overheating

The **maximum** liquid temperature for this pump is 110° F. Do not apply it at a higher operating temperature.

Overheating can occur if the valves in the suction or discharge lines are closed. Operating against closed valves could bring the liquid to a boil, build pressure, and cause the pump to rupture or explode. If overheating occurs, stop the pump and allow it to cool before servicing it. Refill the pump casing with cool liquid.

WARNING

Do not remove plates, covers, gauges, pipe plugs, or fittings from an overheated pump. Vapor pressure within the pump can cause parts being disengaged to be ejected with great force. Allow the pump to cool before servicing.

Strainer Check

If a suction strainer has been shipped with the pump or installed by the user, check the strainer regularly, and clean it as necessary. The strainer should also be checked if pump flow rate begins to drop.

Pump Vacuum Check

Since this pump does not have a suction check valve, the discharge line must be fitted with a check valve if a pump vacuum reading is to be taken.

With the pump inoperative, install a vacuum gauge in the system, using pipe dope on the threads. Block the suction line and start the pump. At operating speed the pump should pull a vacuum of 20 inches or more of mercury. If it does not, check for air leaks in the seal, gasket, or discharge valve.

Open the suction line, and read the vacuum gauge with the pump primed and at operation speed. Shut off the pump. The vacuum gauge reading will immediately drop proportionate to static suction lift, and should then stabilize. If the vacuum reading falls off rapidly after stabilization, an air leak exists. Before checking for the source of the leak, check the point of installation of the vacuum gauge.

STOPPING

Never halt the flow of liquid suddenly. If the liquid being pumped is stopped abruptly, damaging shock waves can be transmitted to the pump and piping system. Close all connecting valves slowly. If the pump is driven by an engine, reduce the throttle speed slowly and allow the engine to idle briefly before stopping.

CAUTION

If application involves a high discharge head, gradually close the discharge throttling valve before stopping the pump.

After stopping the pump, remove the engine ignition key or take other action to ensure that the pump will remain inoperative.

Cold Weather Preservation

In below freezing conditions, drain the pump to prevent damage from freezing. Also, clean out any solids by flushing with a hose. Operate the pump for approximately one minute; this will remove any remaining liquid that could freeze the pump rotating parts.

If the pump will be idle for more than a few hours, or if it has been pumping liquids containing a large amount of solids, drain the pump, and flush it thoroughly with clean water. To prevent large solids from clogging the drain port and preventing the pump from completely draining, insert a rod or stiff wire in the drain port, and agitate the liquid during the draining process. Clean out any remaining solids by flushing with a hose.

BEARING TEMPERATURE CHECK

Bearings normally run at higher than ambient temperatures because of heat generated by friction. Temperatures up to 160°F are considered normal for bearings, and they can operate safely to at least 180°F.

Checking bearing temperatures by hand is inaccurate. Bearing temperatures can be measured accurately by placing a contact-type thermometer against the housing. Record this temperature for future reference.

A sudden increase in bearing temperatures is a warning that the bearings are at the point of failing to operate properly. Make certain that the bearing lubricant is of the proper viscosity and at the correct level (see LUBRICATION in MAINTENANCE AND REPAIR). Bearing overheating can also be caused by shaft misalignment and/or excessive vibration.

When pumps are first started, the bearings may seem to run at temperatures above normal. Continued operation should bring the temperatures down to normal levels.

TROUBLESHOOTING - SECTION D

WARNING

Before attempting to open or service the pump:

1. Familiarize yourself with this manual.
2. Disconnect the engine to ensure that the pump will remain inoperative.
3. Allow the pump to cool if overheated.
4. Vent the pump slowly and cautiously.
5. Close the suction and discharge valves.
6. Check the temperature before opening any covers, plates, or plugs.
7. Drain the pump.

TROUBLE	POSSIBLE CAUSE	PROBABLE REMEDY
PUMP FAILS TO PRIME	Auxiliary priming device faulty or improperly installed.	Repair priming device or check installation.
	Air leak in suction line.	Correct leak.
	Lining of suction hose collapsed.	Replace suction hose.
	Leaking or worn seal or pump gasket.	Check pump vacuum. Replace leaking or worn seal or gasket.
	Suction lift or discharge head too high.	Check piping installation and install bypass line if needed. See INSTALLATION.
	Strainer clogged.	Check strainer and clean if necessary.
PUMP STOPS OR FAILS TO DELIVER RATED FLOW OR PRESSURE	Air leak in suction line.	Correct leak.
	Suction intake not submerged at proper level or sump too small.	Check installation and correct as needed.Check submergence chart (Section B).
	Lining of suction hose collapsed.	Replace suction hose.
	Impeller or other wearing parts worn or damaged.	Replace worn or damaged parts. Check that impeller is properly centered and rotates freely.

TROUBLE	POSSIBLE CAUSE	PROBABLE REMEDY
PUMP STOPS OR FAILS TO DELIVER RATED FLOW OR PRESSURE(cont.)	Impeller clogged.	Free impeller of debris.
	Pump speed too slow.	Check driver output; check belts or couplings for slippage.
	Suction lift too high.	Reduce suction lift.
	Strainer clogged.	Check strainer and clean if necessary.
PUMP REQUIRES TOO MUCH POWER	Discharge head too low.	Adjust discharge valve.
	Liquid solution too thick.	Dilute if possible.
PUMP CLOGS FREQUENTLY	Discharge flow too slow.	Open discharge valve fully to increase flow rate, and run engine at maximum governed speed.
	Pump speed too high.	Check engine output.
EXCESSIVE NOISE	Cavitation in pump.	Reduce suction lift and/or friction losses in suction line.
	Pumping entrained air.	Locate and eliminate source of air bubble.
	Pump or drive not securely mounted.	Secure mounting hardware.
	Impeller clogged or damaged.	Clean out debris; replace damaged parts.
BEARINGS RUN TOO HOT	Bearing temperature is high, but within limits.	Check bearing temperature regularly to monitor any increase.
	Low or incorrect lubricant.	Check for proper type and level of lubricant.
	Suction and discharge lines not properly supported.	Check piping installation for proper support.
	Drive misaligned.	Align drive properly.

MAINTENANCE AND REPAIR - SECTION E

MAINTENANCE AND REPAIR OF THE WEARING PARTS OF THE PUMP WILL MAINTAIN PEAK OPERATING PERFORMANCE.

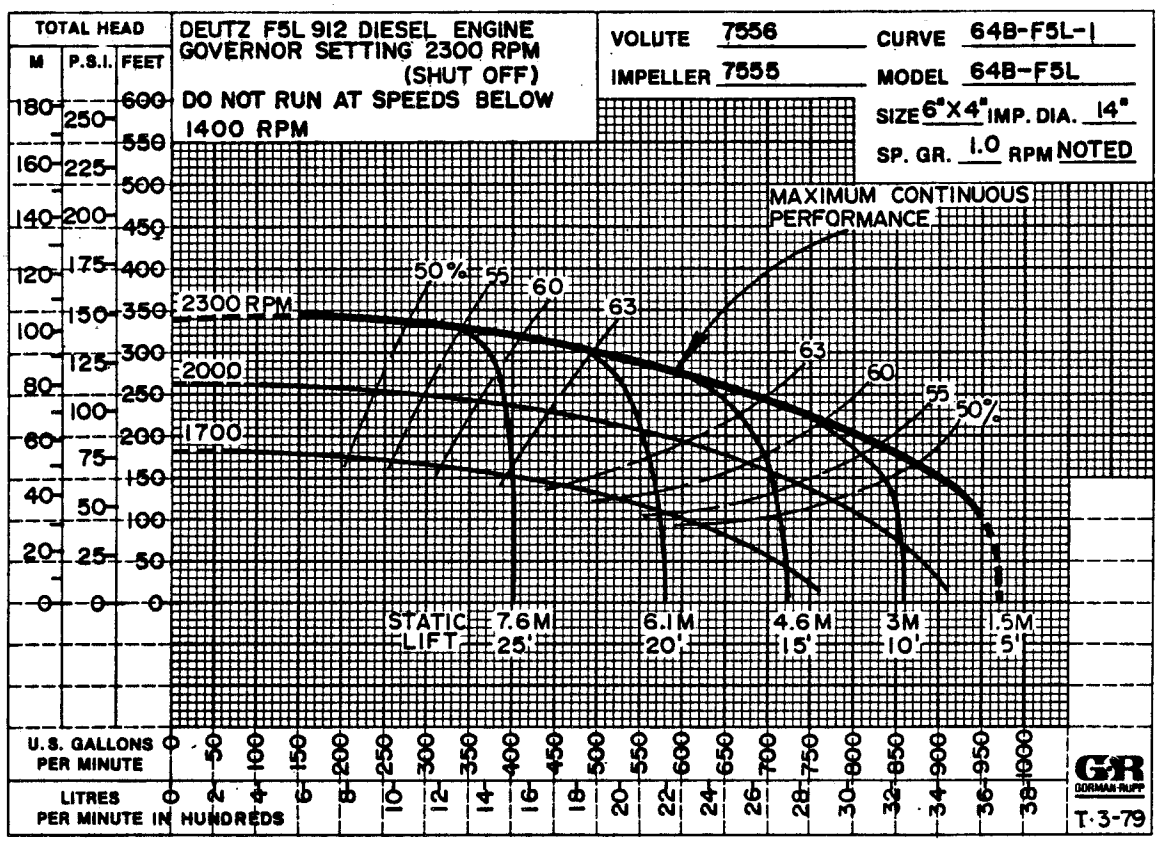

*STANDARD PERFORMANCE FOR PUMP MODEL 64B2-F5L

*Based on 70°F clear water at sea level with minimum suction lift. Since pump installations are seldom identical, your performance may be different due to such factors as viscosity, specific gravity, elevation, temperature, and impeller trim.

If your pump serial number is followed by an "N", your pump is NOT a standard production model. Contact the Gorman-Rupp Company to verify performance or part numbers.

WARNING

Never tamper with the governor to gain more power. The governor establishes safe operating limits that should not be exceeded. The maximum continuous operating speed of this unit is 2300 RPM.

SECTIONAL DRAWING

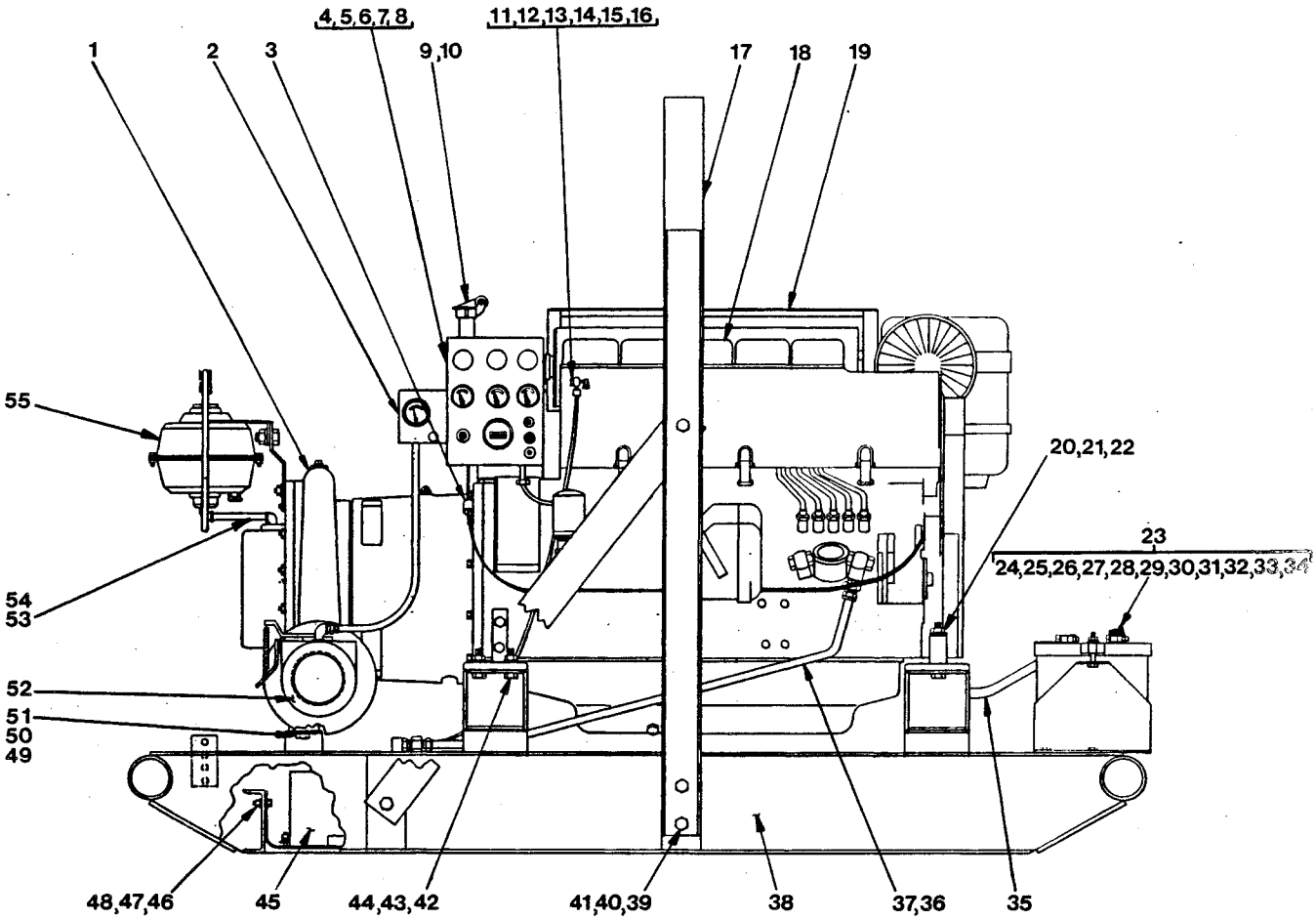

Figure 1. Pump Model 64B2-F5L

PARTS LIST
Pump Model 64B2-F5L
(From S/N 783007 up)

ITEM NO.	PART NAME	PART NUMBER	MATL CODE	QTY
1	PUMP END ASSY	64B2-(F5L)	-----	1
2	PRESS GAUGE KIT	48312-008	-----	1
3	CLIP AIR ELIM	6006	15990	1
4	HOUR/TACHOMETER	29277-004	-----	1
5	TACH BRACKET	34123-014	15020	1
6	WELL NUT	21757-036	-----	2
7	HEX HD CAPSCREW	B00405	15991	2
8	LOCKWASHER	J00004	15991	2
9	EXHAUST ELBOW	31912-024	15990	1
10	WEATHER CAP	S01246	-----	1
11	*FUEL LINE	11308-A	-----	1
12	HOSE CLAMP	26518-642	-----	1
13	*FUEL RETURN ASSY	14294	24030	1
14	RED ELBOW	Q00402	11990	1
15	MALE CONNECTOR	26523-402	-----	1
16	HOSE CLAMP	26518-642	-----	1
17	HOIST BAIL	13351-BB	24000	1
18	DEUTZ F3L ENGINE	29217-061	-----	1
19	MUFFLER GUARD ASSY	42331-011	24150	1
20	T TYPE LOCKWASHER	AK00010	15991	2
21	HEX HD CAPSCREW	B01016	15991	2
22	HEX NUT	D00010	15991	2
23	BATTERY BOX ASSY	GRP40-08-B	-----	1
24	- BATTERY	29331-506	-----	1
25	- HEX HD CAPSCREW	B00610	15991	2
26	- FLAT WASHER	K00006	15991	2
27	- LOCKWASHER	J00006	15991	2
28	- HEX NUT	D00006	15991	2
29	- BATTERY BOX	42431-030	24150	1
30	- BATTERY FRAME	42113-012	24150	1
31	- HEX HD CAPSCREW	B00605	15991	2
32	- LOCKWASHER	J00006	15991	2
33	- HEX NUT	D00006	15991	2
34	*- GRD CABLE ASSY	5795-AC	24040	1
	- BATTERY TAG (NOT SHOWN)	6588-S	00000	1
35	*CABLE ASSY (POS)	6926-S	24040	1
36	*FUEL LINE ASSY	9072-L	-----	1
37	CONNECTOR	S01447	-----	1
38	BASE	41566-631	24150	1
39	HEX HD CAPSCREW	B01006	15991	8
40	LOCKWASHER	J00010	15991	8
41	HEX NUT	D00010	15991	8
42	HEX HD CAPSCREW	B01008	15991	4
43	LOCKWASHER	J00010	15991	4
44	HEX NUT	D00010	15991	4
45	FUEL TANK & GUARD	46711-041	-----	1
46	HEX HD CAPSCREW	B00604	15991	10
47	LOCKWASHER	J00006	15991	10
48	HEX NUT	D00006	15991	10
49	HEX HD CAPSCREW	B01208	15991	2
50	LOCKWASHER	J00012	15991	2
51	HEX NUT	D00012	15991	2
52	CHECK VALVE ASSY	GRP14-04-A	-----	1
53	HAND PRIMER HOSE	31412-121	19360	1
54	ST ELBOW	RS00006	11990	1
55	HAND PRIMER ASSY	GRP43-01	-----	1
NOT SHOWN:				
	STRAINER	S01529	-----	1
OPTIONAL:				
	TRUCK ASSY	GRP30-26	-----	1

*INDICATES PARTS RECOMMENDED FOR STOCK

Above Serial Numbers Do Not Apply To Pumps Made In Canada.

CANADIAN SERIAL NO ..... AND UP

SECTIONAL DRAWING

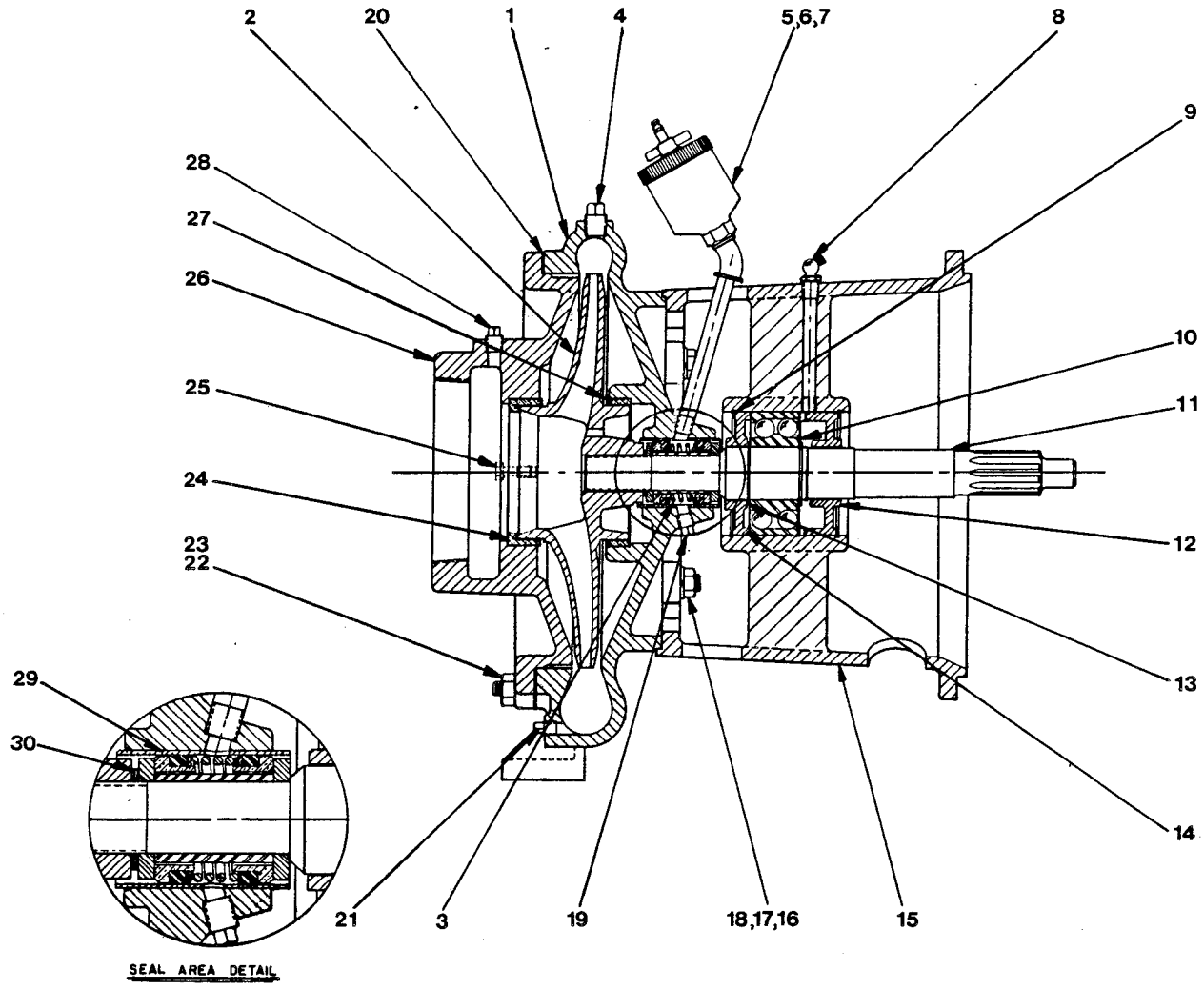

Figure 2. Pump End Assy 64B2-F5L

PARTS LIST
Pump End Assy 64B2-F5L

ITEM NO.		PART NAME	PART NUMBER	MATL CODE	QTY
1		PUMP CASING	7556	10120	1
2	*	IMPELLER	7555	10010	1
3	*	SEAL ASSY	GS01250	-----	1
4		PIPE PLUG	P00008	11990	1
5		GREASE CUP	S01509	-----	1
6		PIPE ELBOW	AG00004	11990	1
7		HEAVY PIPE NIPPLE	THA00424	15070	1
8		LUB FITTING	S00194	-----	1
9		RETAINING RING	S01165	-----	2
10	*	BALL BEARING	S01169	-----	1
11		IMPELLER SHAFT	8396-B	16040	REF
12		BEARING RETAINER	7019	10010	1
13		RETAINING RING	S01164	-----	2
14		BEARING RETAINER	7018	10010	1
15		INTERMEDIATE BRACKET	7013	10010	REF
16		STUD	C01009	15991	4
17		HEX NUT	D00010	15991	4
18		LOCKWASHER	J00010	15991	4
19		PIPE PLUG	P00004	11990	1
20	*	SUCTION HEAD GASKET	7557-G	18000	1
21		PUMP CASING DRAIN PLUG	P00004	11990	1
22		STUD	C01008	15991	16
23		HEX NUT	D00010	15991	16
24	*	WEAR RING	64-H5	14000	1
25		HEX HD CAPSCREW	B00604	15991	2
26		SUCTION HEAD	8569	10010	1
27	*	BALANCE RING	64-H6	14000	1
28		ACCESSORY PLUG	P00006	11990	1
29	*	SEAL LINER	2205-A	14080	REF
30	*	IMPELLER SHIM SET	37-J	17090	REF
NOT SHOWN:					
		NAME PLATE	2613-R	13990	1
		DRIVE SCREW	BM#04-03	15990	2
		PIPE PLUG	P00008	11990	1

*INDICATES PARTS RECOMMENDED FOR STOCK

SECTIONAL DRAWING

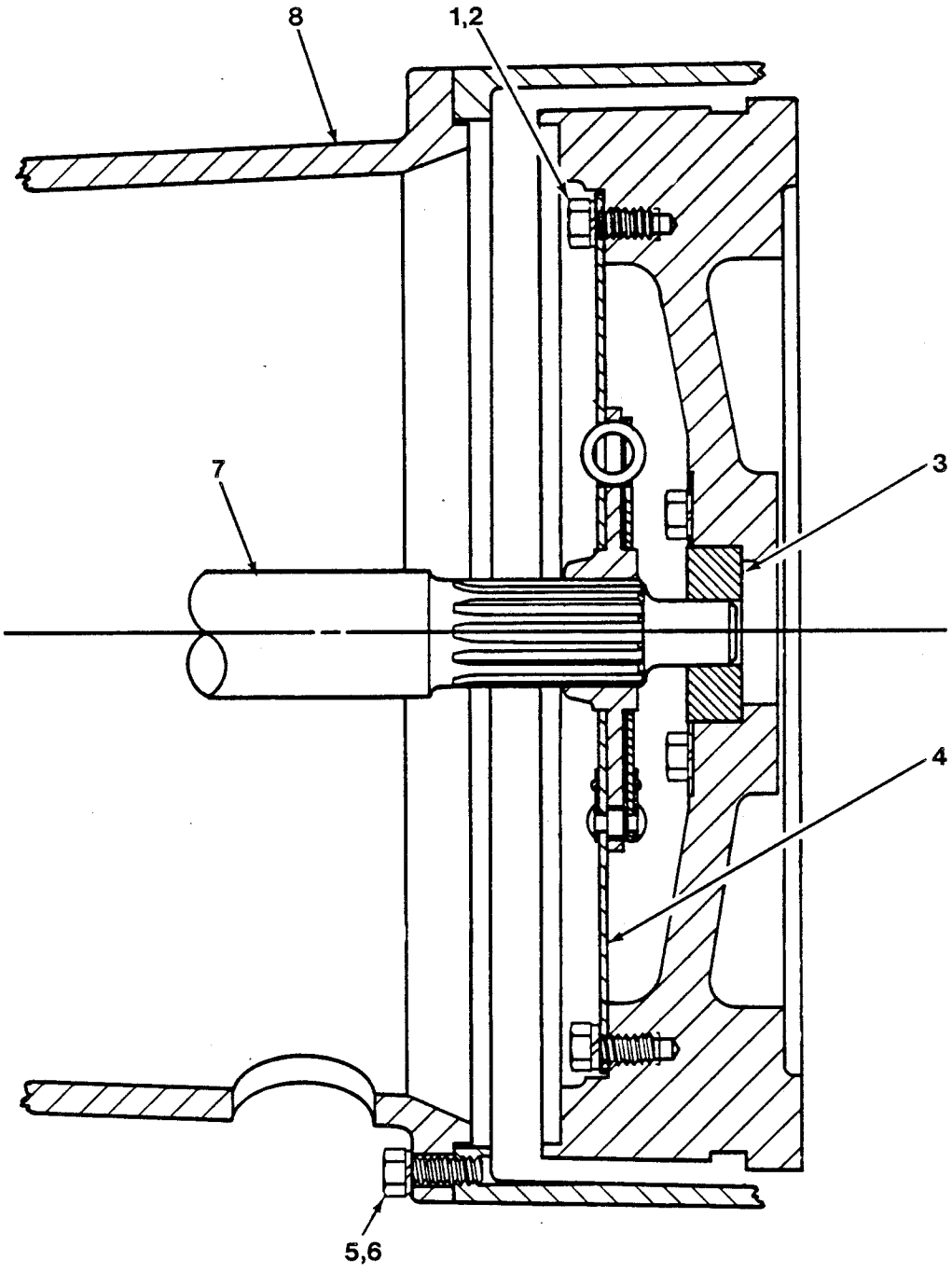

Figure 3. Pump Model 64B2-F5L Drive Assembly

PARTS LIST
Pump Model 64B2-F5L Drive Assembly

ITEM NO.	PART NAME	PART NUMBER	MATL CODE	QTY
1	HEX HD CAPSCREW	22645-158	-----	8
2	LOCKWASHER	21171-511	-----	8
3	PILOT BUSHING	8312-A	15010	1
4	DRIVE PLATE ASSEMBLY	24521-165	-----	1
5	HEX HD CAPSCREW	22645-164	-----	12
6	LOCKWASHER	21171-511	-----	12
7	IMPELLER SHAFT	8396-B	16040	1
8	INTERMEDIATE	7013	10010	1

*INDICATES PARTS RECOMMENDED FOR STOCK

PUMP AND SEAL DISASSEMBLY AND REASSEMBLY

This pump requires little service due to its rugged, minimum-maintenance design. However, if it becomes necessary to inspect or replace the wearing parts follow these instructions which are keyed to Figures 1, 2 and 3 in this section.

Before attempting to service the pump, take precautions to ensure that the engine will remain inoperative while the pump is being serviced and close all valves in the suction and discharge line.

For engine disassembly and repair, consult the literature supplied with the engine or contact your local engine representative.

WARNING

Before attempting to open or service the pump:

1. Familiarize yourself with this manual.
2. Disconnect the engine to ensure that the pump will remain inoperative.
3. Allow the pump to cool if overheated.
4. Vent the pump slowly and cautiously.
5. Close the suction and discharge valves.
6. Check the temperature before opening any covers, plates, or plugs.
7. Drain the pump.

WARNING

Use lifting and moving equipment in good repair and with adequate capacity to prevent injuries to personnel or damage to equipment.

Pump Disassembly

(Figure 2)

Remove the suction and discharge piping. Remove the pump casing drain plug (21) to drain the pump. Clean and reinstall the plug after draining.

For access to the impeller (2) and seal assembly (3), the suction head (26) must be separated from the pump casing (1). Remove the hand primer assembly (55, Figure 1) from the pump casing. Remove the hex nuts (23) and force the suction head out of the pump casing by turning the two jacking screws (25). Turn the screws evenly to prevent binding.

NOTE

For maintenance or repair instructions of the hand primer assembly (55, Figure 1), consult the specific data attached.

Before removing the impeller, turn the cross arm on the seal grease cup (5) clockwise until it rests against the cover (see Figure 5, in **LUBRICATION**). This will prevent the grease in the cup from escaping after the impeller is removed.

To remove the impeller, use an impeller wrench if one was provided. If a wrench is not available, the impeller can be removed by reaching through the discharge port and tightly wedge a block of wood between the vanes of the impeller. Turn the splined end of the shaft in the **opposite** direction of pump rotation. Use caution not to damage the impeller.

Remove the impeller adjusting shims (30). For ease of reassembly, tie and tag the shims, or measure and record their thickness.

Inspect the balancing ring (27) and wear ring (24) and remove them if badly worn or damaged. Both rings are secured by a press fit.

Seal Disassembly

(Figure 4)

Make certain the cross arm on the grease cup has been turned down against the cover before removing the seal assembly.

Carefully remove the rotating elements, stationary seats, packing rings, spring, and the spacer sleeve. Use a stiff wire with a hooked end if necessary.

Inspect the seal liner (29, Figure 2) for wear or grooves which could cause leakage or damage to the seal rings. The seal liner is a press fit in the pump casing (1, Figure 2), and does not normally require replacement. If replacement is necessary, the pump casing must be removed.

If no further disassembly is required, refer to **Seal Reassembly**.

Pump Separation From Engine

(Figure 3)

If it is necessary to separate the pump end from the engine, remove the base mounting hardware under the pump casing.

NOTE

For maintenance or repair instructions of the discharge check valve assembly (52, Figure 1), consult the specific data attached.

Remove the hex nuts and lockwashers (17 and 18, Figure 2) securing the pump casing to the intermediate and separate the two assemblies. Tie and tag any leveling shims used under the pump mounting feet.

Support the intermediate (8) with a sling and hoist. Disengage the hardware (5 and 6) securing the intermediate to the engine and separate the two assemblies by pulling straight away from the engine.

For access to the pilot bushing (3), disengage the hardware (1 and 2) securing the drive plate assembly to the engine flywheel. Remove the pilot bushing if badly worn. It is retained by a press fit.

Impeller Shaft And Bearing Disassembly

(Figure 2)

CAUTION

> Shaft and bearing disassembly in the field is not recommended. These operations should be performed only in a properly-equipped shop by qualified personnel.

Use snap ring pliers to remove the retaining rings (9).

Pull the bearing retainers (12 and 14) from the bearing bore.

Note the location and position of the parts during disassembly, tie and tag the parts by sets for future reference.

Place a block of wood against the drive end of the shaft and force the shaft and assembled bearing from the bearing bore. **Be careful** not to damage the shaft.

NOTE

> There is no provision for draining the grease from the intermediate cavity. Place a drip pan under the intermediate before removing the bearing.

Remove the retaining rings (13) and press the bearing (10) from the shaft.

Impeller Shaft And Bearing Reassembly

(Figure 2)

Remove the grease fitting (8) from the intermediate and flush the old bearing lubricant from the cavity. Clean the shaft, intermediate, and all component parts (except the bearing) with a cloth soaked in cleaning solvent. Inspect the parts for wear, and replace them as necessary.

WARNING

Most cleaning solvents are toxic and flammable. Use them only in a well-ventilated area free from excessive heat, sparks, and flame. Read and follow all precautions printed on solvent containers.

Clean the bearing thoroughly by washing in **fresh** cleaning solvent. Dry the bearing with filtered compressed air and coat with a light oil. Inspect the bearing and replace as necessary.

CAUTION

Bearings must be kept free of all dirt and foreign material. Failure to do so will greatly shorten bearing life. DO NOT spin dry bearings. This may scratch the balls or races and cause premature bearing failure.

The bearing is a light press fit onto the impeller shaft and a snug push fit into the intermediate. If the shaft is worn so that the bearing slips on and off easily, the shaft must be replaced. The intermediate housing must be replaced if the bearing does not fit snugly.

Position the bearing so that the loading groove faces away from the impeller end and press it onto the shaft. Secure the bearing with the two small retaining rings.

NOTE

When installing the bearing onto the shaft, **never** press or hit against the outer race, ball, or ball cage. Press **only** on the inner race.

Install the bearing retainer (14) and retaining ring (9) into the pump side of the bearing bore. Be sure the retainer is properly positioned (see Figure 2).

Slide the shaft and assembled bearing into the intermediate from the drive end until the bearing contacts the bearing retainer.

NOTE

When installing the bearing into the intermediate push against the outer race. **Never** hit the balls or ball cage.

Position the slotted side of the bearing retainer (12) against the bearing and secure the assembly with the retaining ring (9).

An acceptable range of between .002 - .010 inch of shaft endplay is designed into the intermediate.

Lubricate the bearing cavity as indicated in LUBRICATION, Section E.

Attaching Pump To Engine

(Figure 3)

Apply a thin coating of 'Never-Seez' lubricant to the inside diameter of the pilot bushing (3) and press it into the engine flywheel until it seats against the flywheel shoulder. Make certain the bushing does not protrude and preload the shaft and bearings.

CAUTION

> If the pilot bushing and drive plate are not properly positioned on the shaft, excessive wear and a preload condition could cause premature bearing failure.

Secure the drive plate assembly to the flywheel as shown in Figure 3.

Slide the shaft splines into the drive plate and secure the intermediate assembly to the engine bellhousing.

Before securing the pump casing to the intermediate, inspect the bore of the seal liner for excessive wear or grooves that might cause leakage or damage to the seal packing rings. If the seal liner must be replaced, position the pump casing on a bed of an arbor (or hydraulic) press and use a new seal liner to press the old liner out. After the new liner is properly installed, a 1/4 inch diameter hole must be drilled through it to permit the flow of lubricant to the seal assembly. **Be careful** not to damage the threads for the pipe nipple in the pump casing when drilling the hole. Deburr the hole from the inside of the seal liner after drilling.

Shim the pump casing as required to achieve proper alignment and secure it to the intermediate. Install the base mounting hardware. Reinstall the automatic grease cup, pipe elbow and pipe nipple (5, 6 and 7).

Seal Reassembly

(Figure 4)

Clean the seal cavity and shaft with a cloth soaked in cleaning solvent.

WARNING

Most cleaning solvents are toxic and flammable. Use them only in a well-ventilated area free from excessive heat, sparks, and flame. Read and follow all precautions printed on solvent containers.

Inspect the pump casing, seal liner, and the impeller shaft for burrs or sharp corners, and remove any that exist. Replace the seal liner (29) if wear or grooves exist which could cause leakage or damage to the seal packing rings.

NOTE

The pump casing must be removed from the intermediate to install a new seal liner. See **Attaching Pump To Engine** for specific instructions.

The seal is not normally reused since any damage to the precision finished faces could result in premature seal failure. However, if it is necessary to reuse the old seal, wash all metallic parts in fresh cleaning solvent and dry them thoroughly.

Handle the seal parts with extreme care to prevent damage to the precision finished faces. Even finger prints on the faces can shorten seal life. Cleanliness of all seal components is essential.

Inspect the seal components for wear, scoring, grooves, and other damage that might cause leakage. Clean and polish the seal spacer sleeve, or replace it if there are nicks or cuts on either end. If any components are worn, replace the complete seal; **never mix old and new seal parts.**

If replacement seal is being used, remove it from the container and inspect the precision finished faces to ensure that they are free of any foreign matter.

To ease installation of the seal, lubricate the packing rings and seal liner with petroleum jelly or a very small amount of oil, and apply a drop of light lubricating oil on the precision finished faces. Assemble the seal as follows, (see Figure 4).

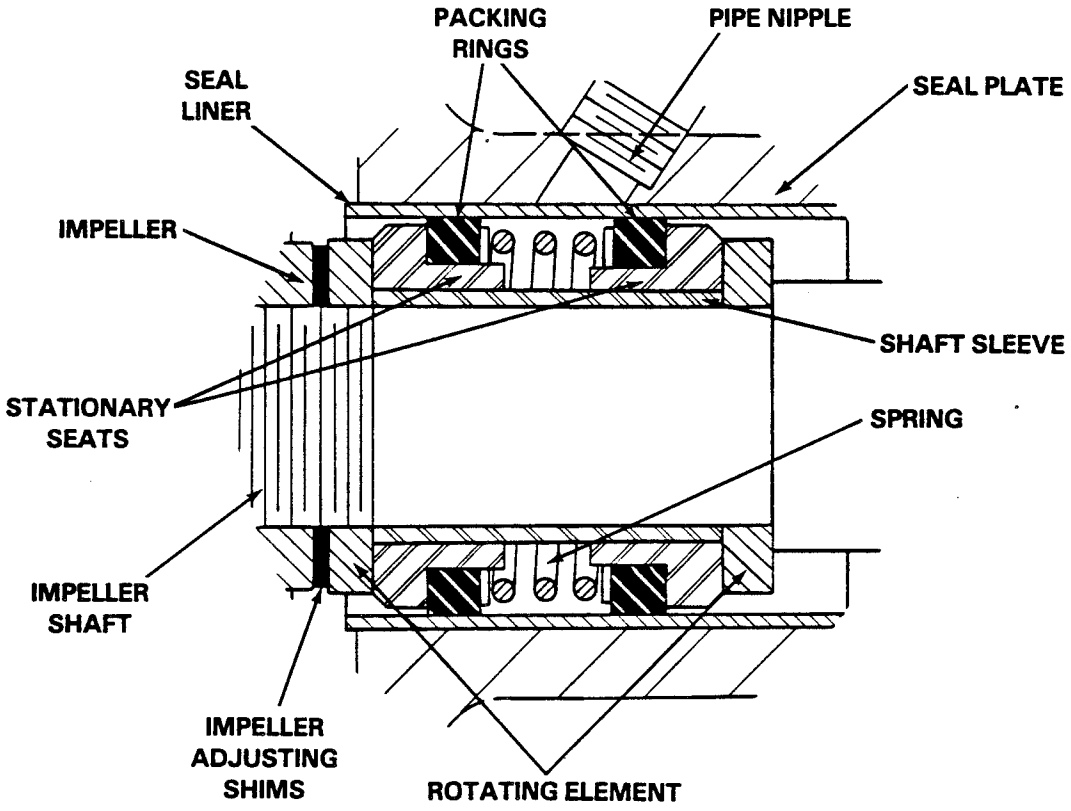

Figure 4. GS01250 Seal Assembly

Slide the inboard rotating element onto the shaft (chamfered side facing the shaft shoulder) until it seats against the shaft shoulder.

Subassemble the inboard stationary seat, packing ring, and spring washer and press the unit into the lubricated seal liner.

Install the spacer sleeve and spring.

Subassemble the outboard stationary seat, packing ring, and spring washer. Press this unit into the lubricated seal liner.

Install the outboard rotating element with chamfered side facing the impeller.

After the impeller has been installed, lubricate the seal as indicated in LUBRICATION.

CAUTION

This seal is not designed for operation at temperatures above 110° F. Do not use at higher operating temperatures.

Pump Reassembly

(Figure 2)

If the balance ring (27) and wear ring (24) were removed, press them into their respective bores until fully seated.

Inspect the impeller and replace it if cracked or badly worn. Slide the correct number of impeller shims on the impeller shaft and screw the impeller completely onto the shaft.

For maximum pump efficiency, the impeller vanes must be centered within the volute scroll. If adjustment is necessary, add or subtract impeller shims.

Replace the suction head gasket (20) and reassemble the suction head and pump casing and secure it with the attaching hardware.

NOTE

Apply 'Loctite Thread Sealant' (G-R part number 18771-050) or equivalent to the studs before securing.

Turn the shaft by hand to make sure that the impeller is not binding or scraping. If it does, check the installation of the wear ring and balance ring, or remove additional shims until the impeller rotates freely when the pump is fully assembled.

Reinstall the hand primer to the pump and install the intake elbow (54, Figure 1) in the suction head.

Final Pump Reassembly

Be sure the pump end assembly is secure to the engine and base.

Install the suction and discharge lines and open all valves in the lines. Make certain that all piping connections are secure.

Be sure the pump end and engine have been properly lubricated, see **LUBRICATION**.

Before starting the pump, prime the pump using the hand-operated primer. Refer to specific data attached.

Refer to **OPERATION**, Section C, and start the pump.

LUBRICATION

Seal Assembly

Before starting the pump, fill the grease cup through the grease fitting with a good grade of No. 2 pressure gun grease until grease escapes from the relief

hole. turn the grease cup arm counterclockwise until it is at the top of the stem; this will release the spring to apply grease to the seal (see Figure 5).

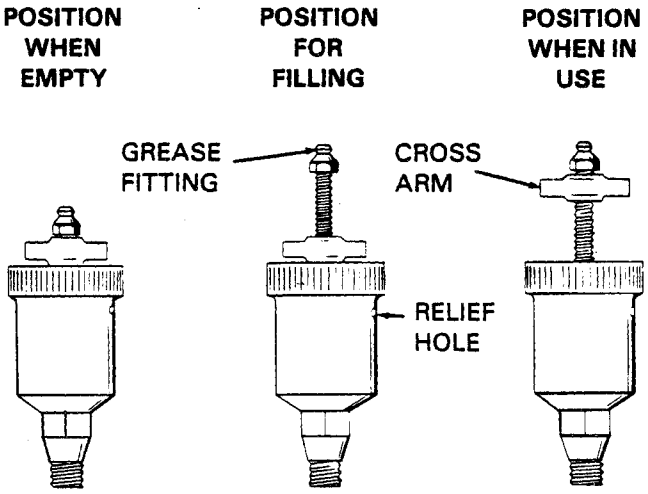

Figure 5. Automatic Lubricating Grease Cup

Bearings

The bearing cavity was fully lubricated when shipped from the factory. When additional lubrication is required, add No. 0 pressure gun grease to the lubrication fitting (8) until grease escapes from the bearing retainers.

There are no provisions in the bearing cavity to drain or flush the lubricant. The pump must be disassembled to completely clean and maintain this cavity.

Under normal conditions, change the grease each 5000 hours of operation, or at 12 month intervals, which ever occurs first. In extremely dirty or humid conditions, change more frequently.

For cold weather operation, consult the factory or a lubricant supplier for the recommended grade of grease.

ENGINE

Consult the literature supplied with the engine, or contact your local engine representative.

For U.S. and International Warranty Information,
Please Visit www.grpumps.com/warranty
or call:
U.S.: 419—755—1280
International: +1—419—755—1352

For Canadian Warranty Information,
Please Visit www.grcanada.com/warranty
or call:
519—631—2870

THE GORMAN-RUPP COMPANY • MANSFIELD, OHIO
GORMAN-RUPP OF CANADA LIMITED • ST. THOMAS, ONTARIO, CANADA