INSTALLATION, OPERATION, PARTS LIST, AND MAINTENANCE MANUAL

A C E

GORMAN-RUPP

OM-01397-0B01

January 3, 1980

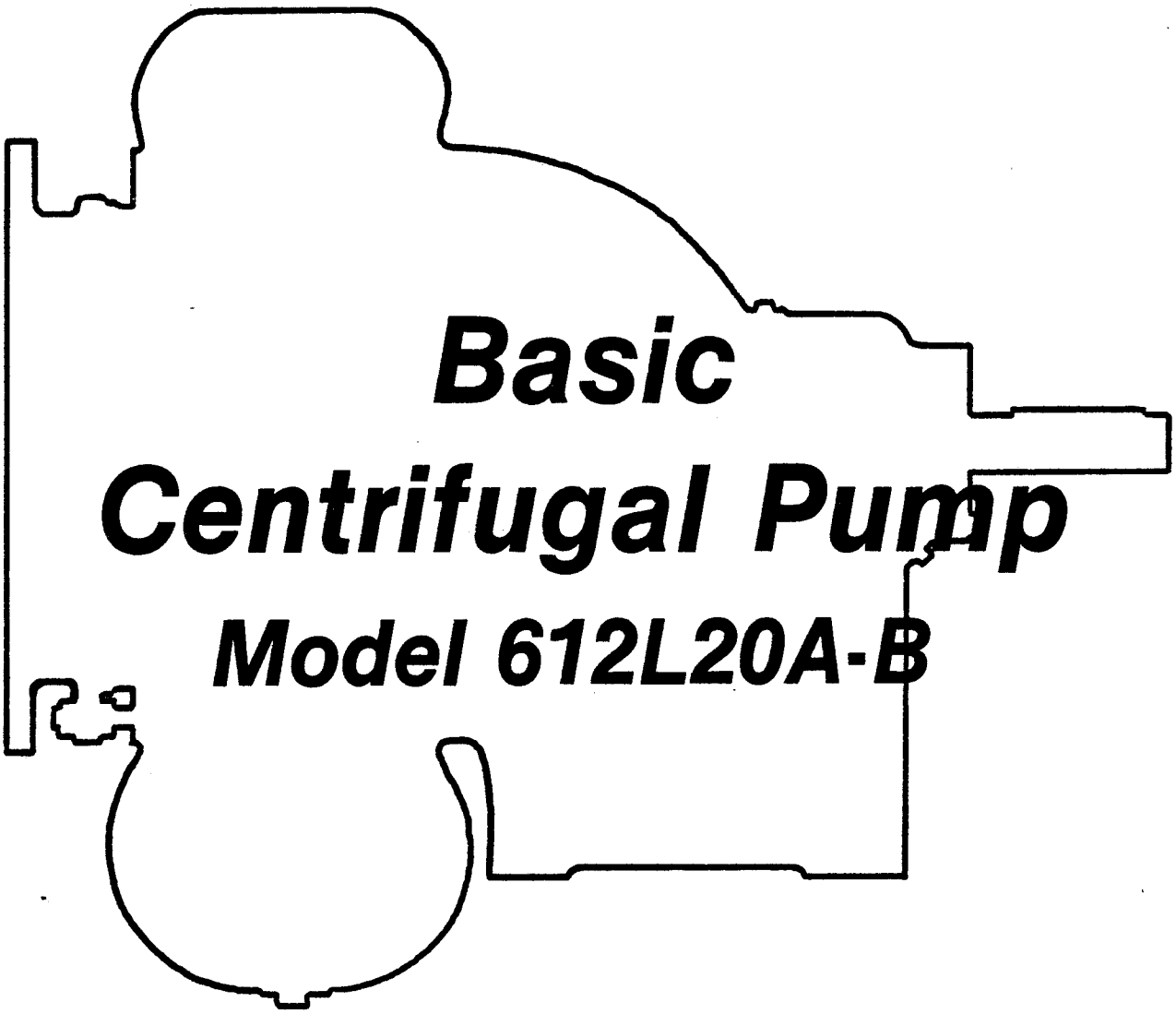

Basic Centrifugal Pump

Model 612L20A-B

THE GORMAN-RUPP COMPANY • MANSFIELD, OHIO

GORMAN-RUPP OF CANADA LIMITED • ST. THOMAS, ONTARIO, CANADA Printed in U.S.A.

Copyright by the Gorman-Rupp Company

This Installation, Operation, and Maintenance Manual is designed to help you get the best performance and longest life from your Gorman-Rupp pump.

This pump is a 60 Series, semi-enclosed impeller, centrifugal model with straight-in suction without a suction check valve. This pump is suitable for pumping liquids which do not contain large solids. For specific service, consult your Gorman-Rupp distributor or the Gorman-Rupp Company.

If there are any questions regarding the pump which are not covered in this manual or in other literature accompanying the unit, please contact your Gorman-Rupp distributor, or write:

The Gorman-Rupp Company
P.O. Box 1217
Mansfield, Ohio 44902

or

Gorman-Rupp of Canada Limited
70 Burwell Road
St. Thomas, Ontario N5P 3R7

The following are used to alert maintenance personnel to procedures which require special attention, to those which could damage equipment, and to those which could be dangerous to personnel:

NOTE

Instructions to aid in installation, operation, or maintenance or which clarify a procedure.

CAUTION

Instructions which must be followed to avoid causing damage to the product or other equipment incidental to the installation. These describe the procedure required and the damage which could result from failure to follow the procedure.

WARNING

Instructions which must be followed to avoid causing injury or death to personnel. These describe the procedure required and the injury which could result from failure to follow the procedure.

TABLE OF CONTENTS

WARNINGS	Section A
INSTALLATION	Section B
OPERATION	Section C
TROUBLESHOOTING	Section D
MAINTENANCE AND REPAIR	Section E
WARRANTY	

WARNINGS

THESE WARNINGS APPLY TO 60 SERIES BASIC PUMPS. GORMAN-RUPP HAS NO CONTROL OVER OR PARTICULAR KNOWLEDGE OF THE POWER SOURCE WHICH WILL BE USED. REFER TO THE MANUAL ACCOMPANYING THE POWER SOURCE BEFORE ATTEMPTING TO START THE POWER SOURCE.

Before attempting to open or service the pump:

1. Familiarize yourself with this manual.
2. Disconnect the power source to ensure that the pump will remain inoperative.
3. Allow the pump to cool if overheated.
4. Vent the pump slowly and cautiously.
5. Close the suction and discharge valves.
6. Check the temperature before opening any covers, plates, or plugs.
7. Drain the pump.

Do not attempt to pump any liquids for which this pump has not been designed.

After the pump has been installed, make certain that the pump and all piping connections are secure before attempting to operate it.

Do not operate the pump without shields and/or guards in place over drive shafts, belts and/or couplings, or other rotating parts. Exposed rotating parts can catch clothing, fingers, or tools, causing severe injury to personnel.

Do not operate the pump against a closed discharge valve for long periods of time. This could bring the liquid to a boil, build pressure, and cause the pump to rupture or explode.

Overheated pumps can cause severe burns and injury. If overheating of the pump casing occurs:

1. Stop the pump immediately.
2. Allow the pump to cool.
3. Refer to instructions in this manual before restarting the pump.

Do not remove plates, covers, gauges, pipe plugs, or fittings from an overheated pump. Vapor pressure within the pump can cause parts being disengaged to be ejected with great force. Allow the pump to cool before servicing.

INSTALLATION

Since pump installations vary, this section is intended only to summarize recommended installation practice. If there are any questions concerning a specific installation, contact your Gorman-Rupp distributor or the Gorman-Rupp Company.

PREINSTALLATION INSPECTION

The pump assembly was inspected and tested before it was shipped from the factory. Before installation, inspect the pump for damage which may have occurred during shipment.

a. Check the pump assembly for cracks, dents, damaged threads, and other obvious damage.

b. Check for and tighten loose bolts, nuts, cap screws, and other attaching hardware. Since gaskets tend to shrink after drying, check for and tighten loose nuts and cap screws securing mating surfaces.

c. Carefully read all tags, decals, and markings on the pump assembly, and perform all duties indicated. Note the direction of rotation indicated on the pump. Check that the pump shaft rotates in the required direction.

CAUTION

Only operate this pump in the direction indicated by the arrow on the pump body and on the accompanying decal. Otherwise, the impeller could become loosened from the shaft and seriously damage the pump.

d. Check all lubricant levels and lubricate as necessary. Refer to the MAINTENANCE AND REPAIR section of this manual.

POSITIONING THE PUMP

Mounting

Locate the pump in an accessible place as close as practical to the liquid being pumped. Level mounting is essential for proper operation. It may be necessary to support or shim the pump for level operation.

Lifting

WARNING

Use lifting and moving equipment in good repair and with adequate capacity to prevent injuries to personnel or damage to equipment.

Make sure that hoists and other lifting equipment are of sufficient capacity to safely handle the pump assembly. If chains and cables are used, make certain that they are positioned so that they will not damage the pump, and so that the load will be balanced.

CAUTION

The pump assembly can be seriously damaged if the cables or chains used to lift and move the unit are improperly wrapped around it.

SUCTION AND DISCHARGE PIPING

Materials

Either pipe or hose may be used for suction and discharge lines. Piping materials must be compatible with the liquid being pumped. If hose is used in suction lines, it must be the rigid-wall, reinforced type to prevent collapse under suction. Using pipe couplings in suction lines is not recommended.

Line Configuration

Keep suction and discharge lines as straight as possible to minimize friction losses. Make minimum use of elbows and fittings, which substantially increase friction loss. If elbows are necessary, use the long-radius type to minimize friction loss.

Connections to Pump

Before tightening a connecting flange, align it exactly with the pump port. Never pull a pipe line into place by tightening the flange bolts.

Lines near the pump must be independently supported to avoid strain on the pump which could cause excessive vibration, decreased bearing life, and increased shaft and seal wear. If hose-type lines are used, they should have adequate support to secure them when filled with liquid and under pressure.

Gauges

Most pumps are drilled and tapped for installing discharge pressure and vacuum suction gauges. If these gauges are desired for pumps that are not tapped, drill and tap the suction and discharge lines close to the pump before installing the lines.

SUCTION LINES

To avoid air pockets which could affect pump priming, the suction line must be as short and direct as possible. When operation involves a suction lift, the line must always slope upward to the pump from the source of the liquid being pumped; if the line slopes down to the pump at any point along the suction run, air pockets will be created.

Fittings

Suction lines should be the same size as the pump inlet. If reducers are used in suction lines, they should be the eccentric type, and should be installed with the flat part of the reducers uppermost to avoid creating air pockets. Valves are not normally used in suction lines, but if a valve is used, install it with the stem horizontal to avoid air pockets.

Strainers

If a strainer is furnished with the pump, be certain to use it; any entrained solids which pass through a strainer furnished with the pump will also pass through the pump itself.

If a strainer is not furnished with the pump, but is installed by the pump user, make certain that the total area of the openings in the strainer is at least three or four times the cross section of the suction line, and that the openings will not permit passage of solids larger than the solids handling capability of the pump.

Sealing

Since even a slight leak will affect priming, head, and capacity, especially when operating with a high suction lift, all connections in the suction line should be sealed with pipe dope to ensure an airtight seal. In volatile and/or corrosive service, the pipe dope should be compatible with the liquid being pumped.

Suction Lines In Sumps

If a single suction line is installed in a sump, it should be positioned away from the wall of the sump at a distance equal to one and one-half times the diameter of the suction pipe.

If there is a liquid flow from an open pipe into the sump, the flow should be kept away from the suction inlet because the inflow will carry air down into the sump, and air entering the suction line will reduce pump efficiency.

If it is necessary to position inflow close to the suction inlet, install a baffle between the inflow and the suction inlet at a distance equal to one and one-half times the diameter of the suction pipe. The baffle will allow entrained air to escape from the liquid before it is drawn into the suction inlet.

If two suction lines are installed in a single sump, the flow paths may interact, reducing the efficiency of one or both pumps. To avoid this, position the suction inlets so that they are separated by a distance at least three times the diameter of the suction pipes.

Suction Line Positioning

The depth of submergence of the suction line is critical to efficient pump operation. Figure 1 shows recommended minimum submergence vs. velocity.

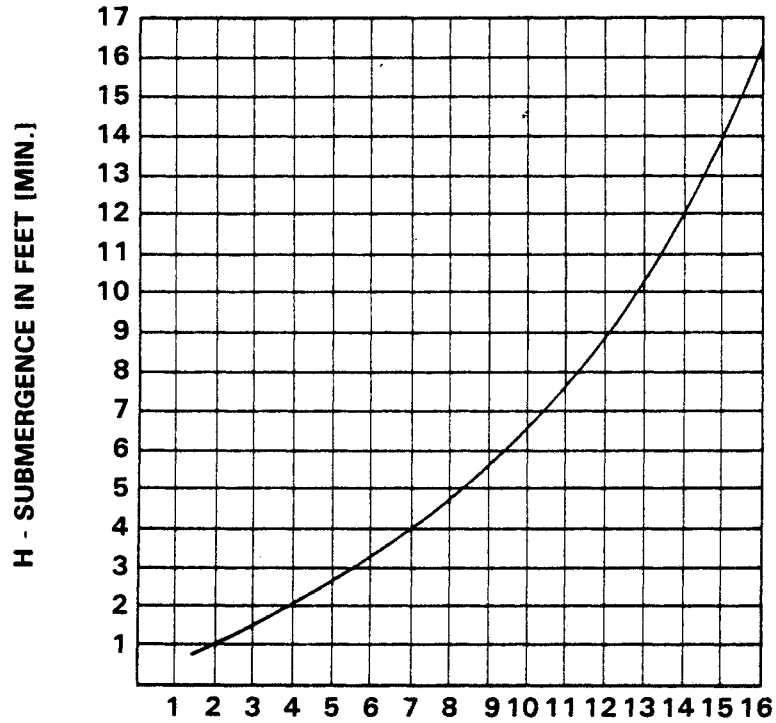

$$\text{VELOCITY IN FEET PER SEC.} = \frac{\text{QUAN. [G.P.M.]} \times .321}{\text{AREA}} \text{ OR } \frac{\text{G.P.M.} \times .4085}{D^2}$$

Figure 1. Recommended Minimum Suction Line Submergence Vs. Velocity

DISCHARGE LINES

Do not terminate the discharge line at a level lower than that of the liquid being pumped unless a siphon breaker is used in the line. Otherwise, a siphoning action causing damage to the pump could result.

Valves

If a throttling valve is desired in the discharge line, use a valve as large as the largest pipe in the line to minimize friction losses. Never install a throttling valve in a suction line.

A check valve in the discharge line is normally recommended, but is not necessary in low discharge head applications.

With high discharge heads, install a throttling valve and a check valve in the discharge line to protect the pump from excessive shock pressure and reverse rotation when it is stopped.

ALIGNMENT

Aligning the pump and its power source is critical for trouble-free mechanical operation.

WARNING

When checking alignment, disconnect the power source to ensure that the pump will remain inoperative.

Before checking alignment, tighten the foundation bolts, pump casing and/or pedestal feet, and power source mounting bolts. Make sure that the pump is level.

CAUTION

Adjusting the alignment in one direction may alter the alignment in another direction. Check each procedure after altering alignment.

Coupling-Driven Pumps

When using couplings, the axis of the power source must be aligned to the axis of the pump shaft in both the horizontal and vertical planes. Most couplings require a specific gap or clearance between the driving and the driven shafts. Refer to the coupling manufacturer's service literature.

Align spider insert type couplings by using calipers to measure the dimensions on the circumference of the outer ends of the coupling hub every 90 degrees. The coupling is in alignment when the hub ends are the same distance apart at all points (see figure 2A).

Align non-spider type couplings by using a feeler gauge or taper gauge between the coupling halves every 90 degrees. The coupling is in alignment when the hubs are the same distance apart at all points (see figure 2B).

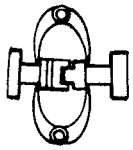

Figure 2A. Aligning Spider-Type Couplings

Figure 2B. Aligning Non-Spider Type Couplings

Check parallel adjustment by laying a straightedge across both coupling rims at the top, bottom, and side. When the straightedge rests evenly on both halves of the coupling, the coupling is in horizontal parallel alignment. If the coupling is misaligned, use a feeler gauge between the coupling and the straightedge to measure the amount of misalignment.

V-Belt Driven Pumps

When using V-belt drives, the power source and the pump must be parallel. Use a straightedge along the sides of the pulleys to ensure that the pulleys are properly aligned (see figure 2C). In drive systems using two or more belts, make certain that the belts are a matched set; unmatched sets will cause accelerated belt wear.

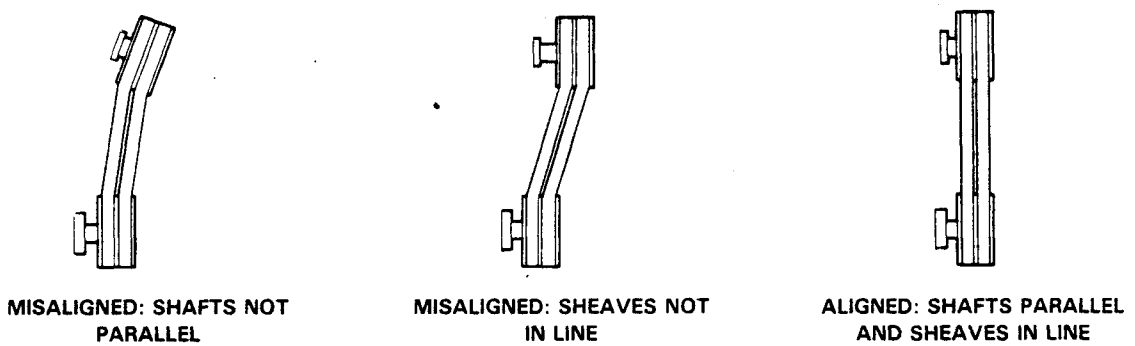

Figure 2C. Alignment of V-Belt Driven Pumps

Tighten the belts in accordance with the belt manufacturer's instructions. If the belts are too loose, they will slip; if the belts are too tight, there will be excessive power loss and possible bearing failure. Select pulleys that will match the proper speed ratio; overspeeding the pump may damage both pump and power source.

WARNING

Do not operate the pump without a guard over the rotating parts. Exposed rotating parts can catch clothing, fingers, or tools, causing severe injury to personnel.

OPERATION

WARNING

Do not attempt to pump any liquids for which this pump has not been designed.

PRIMING

Install the pump and piping as described in INSTALLATION. Make sure that the piping connections are tight, and that the pump is securely mounted. Check that the pump is properly lubricated (see LUBRICATION in MAINTENANCE AND REPAIR).

This pump should never be operated unless there is liquid in the volute.

CAUTION

Never operate this pump unless the volute is filled with liquid. The pump will not prime when dry. Extended operation of a dry pump will destroy the seal assembly.

Add liquid to the volute housing:

1. When the pump is being put into service for the first time.
2. When the pump has not been used for a considerable length of time.
3. When the liquid in the volute housing has evaporated.

WARNING

After filling the volute housing, do not attempt to operate the pump unless all connecting piping is securely installed. Otherwise, liquid in the pump forced out under pressure could cause injury to personnel.

STARTING

Rotation

The correct direction of pump rotation is indicated by an arrow on the pump body, and on the accompanying decal. If the pump is operated in the wrong direction, the impeller could become loosened from the shaft and seriously damage the pump.

> **CAUTION**
>
> Only operate this pump in the direction indicated by the arrow on the pump body and on the accompanying decal. Otherwise, the impeller could become loosened from the shaft and seriously damage the pump.

Consult the operating manual furnished with the power source before attempting to start the power source.

If a three-phase electric motor is being used, check rotation by starting the pump for a moment to see if the rotation is correct. If the shaft, coupling, or V-belt is not visible, rotation can usually be determined by observing the motor cooling fan. If the rotation is incorrect, have qualified personnel interchange any two of the three-phase wires to change direction.

Starting

Open all valves in the discharge line and start the power source. Priming is indicated by a positive reading on the discharge pressure gauge or by quieter operation. The pump may not prime immediately because the suction line must first fill with liquid. If the pump fails to prime within five minutes, stop it and check the suction line for leaks.

After the pump has been primed, partially close the discharge line throttling valve in order to fill the line slowly and guard against excessive shock pressure which could damage pipe ends, gaskets, sprinkler heads, and any other fixtures connected to the line. When the discharge line is completely filled, adjust the throttling valve to the required discharge flow rate.

Leakage

No leakage should be visible at pump mating surfaces, or at pump connections or fittings. Keep all line connections and fittings tight to maintain maximum pump efficiency.

Overheating

Overheating can occur if the valves in the suction or discharge lines are closed. Operating against closed valves could bring the liquid to a boil, build pressure, and cause the pump to rupture or explode. If overheating occurs, stop the pump and allow it to cool before servicing it. Refill the volute casing with cool liquid.

WARNING

Do not remove plates, covers, gauges, pipe plugs, or fittings from an overheated pump. Vapor pressure within the pump can cause parts being disengaged to be ejected with great force. Allow the pump to cool before servicing.

Strainer Check

If a suction strainer has been shipped with the pump or installed by the user, check the strainer regularly, and clean it as necessary. The strainer should also be checked if pump flow rate begins to drop.

Pump Vacuum Check

Since this pump does not have a suction check valve, the discharge line must be fitted with a check valve if a pump vacuum reading is to be taken.

With the pump inoperative, install a vacuum gauge in the system, using pipe dope on the threads. Block the suction line and start the pump. At operating speed the pump should pull a vacuum of 20 inches or more of mercury. If it does not, check for air leaks in the seal or gasket.

Open the suction line, and read the vacuum gauge with the pump primed and at operating speed. Shut off the pump, and read the gauge again to determine if the vacuum remains at the maximum developed by the pump. If the vacuum falls off rapidly, an air leak exists; check to make certain that the air leak is not from the vacuum gauge connection.

Stopping

After stopping the pump, disconnect the power source to ensure that the pump will remain inoperative.

In below freezing conditions, drain the pump to prevent damage from freezing. Also, clean out any solids by flushing with a hose. Operate the pump for approximately one minute; this will remove any remaining liquid that could freeze the pump rotating parts.

If the pump will be idle for more than a few hours, or if it has been pumping liquids containing a large amount of solids, drain the pump, and flush it thoroughly with clean water. To prevent large solids from clogging the drain port and preventing the pump from completely draining, operate the pump during the draining process. Clean out any remaining solids by flushing with a hose.

BEARING TEMPERATURE CHECK

Bearings normally run at higher than ambient temperatures because of heat generated by friction. Temperatures up to 160°F are considered normal for pedestal bearings, and they can operate safely to at least 180°F.

Checking bearing temperatures by hand is inaccurate. Bearing temperatures can be measured accurately by placing a contact-type thermometer against the housing. Record this temperature for future reference.

A sudden increase in bearing temperatures is a warning that the bearings are at the point of failing to operate properly. Make certain that the bearing lubricant is of the proper viscosity and at the correct level (see LUBRICATION in MAINTENANCE AND REPAIR). Bearing overheating can also be caused by shaft misalignment and/or excessive vibration.

When pumps are first started, the bearings may seem to run at temperatures above normal. Continued operation should bring the temperatures down to normal levels.

TROUBLESHOOTING

WARNING

Before attempting to open or service the pump:

1. Consult pump service manual.
2. Disconnect the power source to ensure that the pump will remain inoperative.
3. Allow pump to cool if overheated.
4. Close suction and discharge valves.
5. Drain pump.

Trouble	Possible Cause	Probable Remedy
PUMP FAILS TO PRIME	Air leak in suction line.	Correct leak.
	Lining of suction hose collapsed.	Replace suction hose.
	Leaking or worn seal or pump gasket.	Check pump vacuum. Replace leaking or worn seal or gasket.
	Suction lift or discharge head too high.	Check piping installation and install bypass line if needed. See INSTALLATION.
	Strainer clogged.	Check strainer and clean if necessary.
PUMP STOPS OR FAILS TO DELIVER RATED FLOW OR PRESSURE	Air leak in suction line.	Correct leak.
	Suction intake not submerged at proper level or sump too small.	Check installation and correct as needed. Check submergence chart (Section B, 4).
	Lining of suction hose collapsed.	Replace suction hose.
	Impeller or other wearing parts worn or damaged.	Replace worn or damaged parts. Check that impeller is properly centered and rotates freely.
	Impeller clogged.	Free impeller of debris.
	Pump speed too slow.	Check driver output; check belts or couplings for slippage.
	Discharge head too high.	Install bypass line.
	Suction lift too high.	Reduce suction lift.
	Strainer clogged.	Check strainer and clean if necessary.

Trouble	Possible Cause	Probable Remedy
PUMP STOPS OR FAILS TO DE-LIVER RATED FLOW OR PRESSURE (cont)	Leaking or worn seal or pump gaskets.	Check pump vacuum. Replace leaking or worn seal or pump gaskets.
PUMP REQUIRES TOO MUCH POWER	Pump speed too high.	Check driver output; check that sheaves or couplings are correctly sized.
	Discharge head too low.	Adjust discharge valve.
	Liquid solution too thick.	Dilute if possible.
PUMP CLOGS FREQUENTLY	Discharge flow too slow.	Open discharge valve fully to increase flow rate, and run engine at maximum governed speed.
EXCESSIVE NOISE	Cavitation in pump.	Reduce suction lift and/or friction losses in suction line.
	Pumping entrained air.	Locate and eliminate source of air bubble.
	Pump or drive not securely mounted.	Secure mounting hardware.
	Impeller clogged or damaged.	Clean out debris; replace damaged parts.
BEARINGS RUN TOO HOT	Bearing temperature is high, but within limits.	Check bearing temperature frequently to monitor any increase.
	Low or incorrect lubricant.	Check for proper type and level of lubricant.
	Suction and discharge lines not properly supported.	Check piping installation for proper support.
	Drive misaligned.	Align drive properly.

Basic Centrifugal Pump
Model 612L20A-B

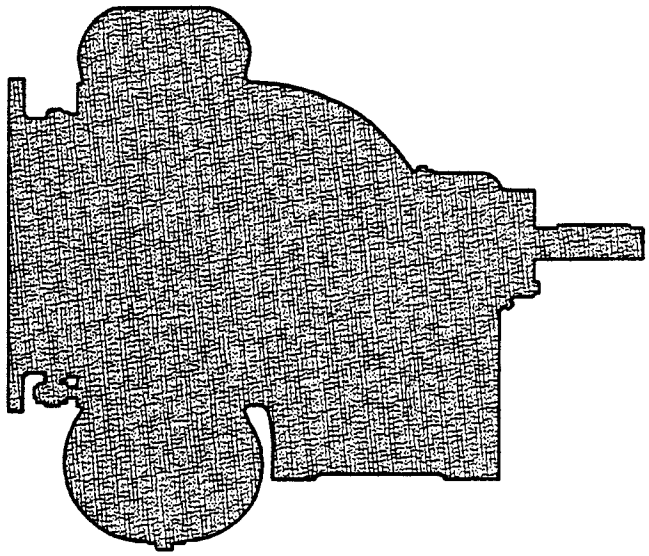

The only moving parts of this pump are the impeller, impeller wear ring, seal rotating elements, and the shaft. The adjustable wear ring, impeller, and seal, which receive the most wear, are easily accessible and can be replaced. Maintenance and replacement of these parts will maintain the peak operating efficiency of the pump.

SECTIONAL DRAWING

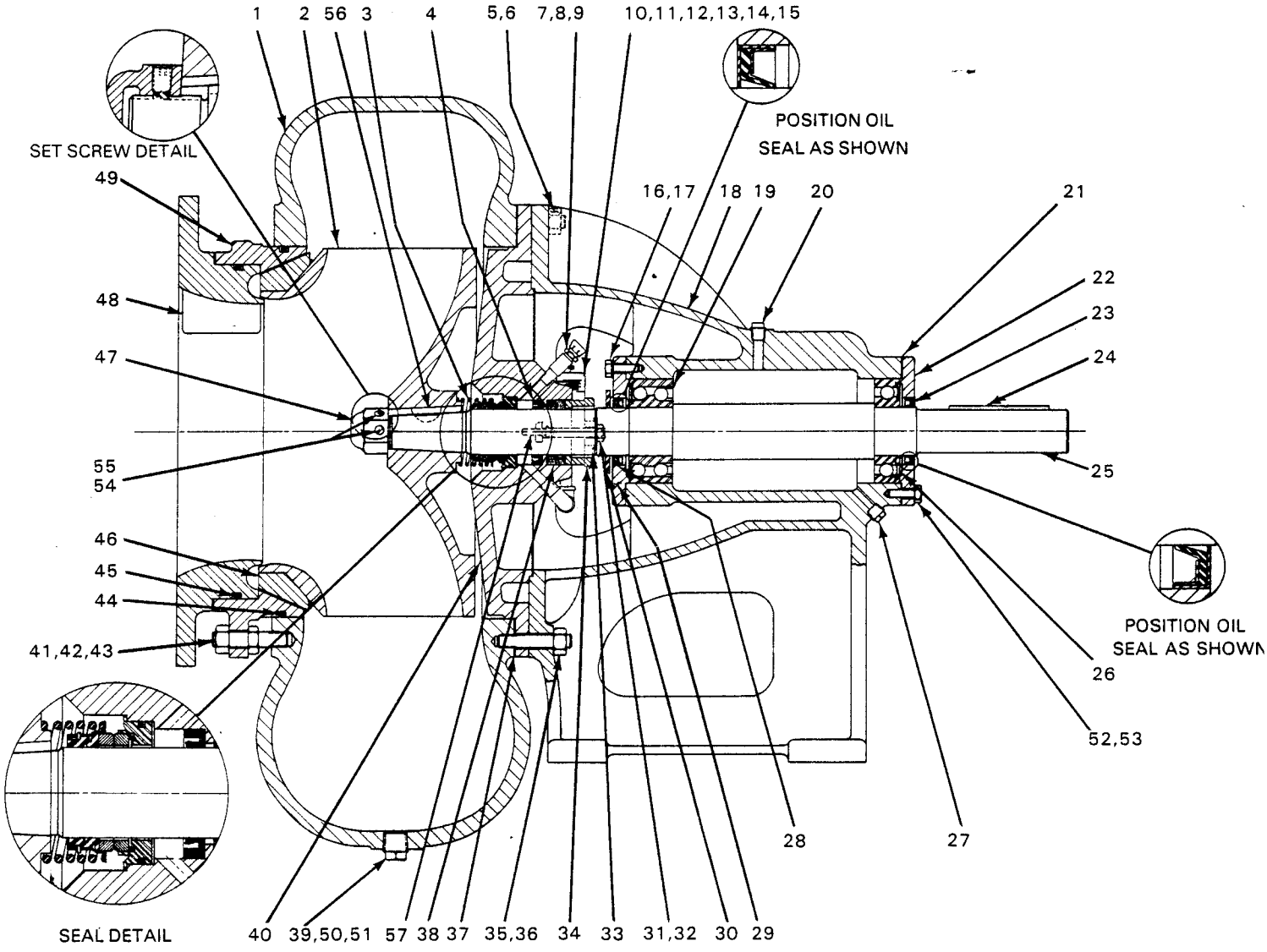

Figure 1. Pump Model 612L20A-B

PARTS LIST

PUMP MODEL 612L20A-B

(From S/N 671412 up)

Above Serial Numbers Do Not Apply To Pumps Made In Canada.

ITEM NO.	PART NAME	PART NUMBER	MATL CODE	QTY
1	VOLUTE HOUSING	4178	10010	1
2	★IMPELLER ASSEMBLY	46151-012	—	1
3	★SEAL ASSEMBLY	12590-B	—	1
4	★OIL SEAL	25217-601	—	1
5	STUD	C-1011	15991	10
6	HEX NUT	D-10	15991	10
7	PIPE NIPPLE	T-02	15070	1
8	PIPE COUPLING	AE-02	11990	1
9	AIR VENT FITTING	S-2162	—	1
10	BOTTLE OILER	S-1933	—	1
11	PIPE COUPLING	AE-02	11990	1
12	PIPE NIPPLE	T-0208	15070	1
13	PIPE ELBOW	R-02	11990	1
14	PIPE NIPPLE	T-0224	15070	1
15	STREET ELBOW	RS-02	11990	1
16	HEX HEAD CAPSCREW	B-0605	15991	6
17	LOCKWASHER	J-06	15991	6
18	PEDESTAL	3233-B	10010	1
19	★BALL BEARING	S-1032	—	1
20	VENT PIPE PLUG	4823	11990	1
21	★BEARING GASKET	5413-G	18000	1
22	BEARING CAP	4185-A	10010	1
23	★OIL SEAL	25227-631	—	1
24	SHAFT KEY	N-0616	15990	1
25	★IMPELLER SHAFT	38516-202	—	1
26	★BALL BEARING	S-616	—	1
27	PEDESTAL DRAIN PLUG	P-04	11990	1
28	★OIL SEAL	25227-631	—	1
29	BEARING CAP	4184-A	10010	1
30	SLINGER RING	5053	19120	1
31	MACHINE BOLT	A-0610	15991	2
32	GLAND NUT	DD-06	15991	2
33	GLAND CLIP	4192	15991	2
34	SPLIT PACKING GLAND	5047-C	10010	1
35	STUD	C-1013	15991	2
36	HEX NUT	D-10	15991	2
37	★VOLUTE HOUSING GASKET	4180-G	18000	1
38	★PACKING	PP-0629	22050	2
39	VOLUTE DRAIN PLUG	P-12	11990	2
40	★SEAL PLATE	4179-F	10010	1
41	STUD	12739	15010	4
42	JAM NUT	AT-10	15991	4
43	HEX NUT	D-10	15991	4
44	★O-RING	S-1914	—	1
45	★O-RING	S-1991	—	1
46	★WEAR RING	12734	11010	1
47	IMPELLER NUT	4190-B	10090	1
48	SUCTION PLATE	12737	11010	1
49	★ADJUSTABLE WEAR RING	12736	11010	1
50	PIPE PLUG (NOT SHOWN)	P-06	11990	1
51	PIPE PLUG (NOT SHOWN)	P-24	11990	1
52	HEX HEAD CAPSCREW	B-0605	15991	4
53	LOCKWASHER	J-06	15991	4
54	SET SCREW	GA-0601½	17090	2
55	INSERT	31111-003	—	2
56	WOODRUFF KEY	AV-1210	15990	1
57	RD HD MACHINE SCREW	X-0404	15991	2
NOT SHOWN:				
	NAME PLATE	2613-D	13990	1
	ROTATION DECAL	2613-CU	00000	1
OPTIONAL:				
	STRAINER ASSEMBLY	4990	—	1

NOTE: P/N 46151-012 IMPELLER ASSEMBLY INCLUDES P/N 12734 WEAR RING.

★INDICATES PARTS RECOMMENDED FOR STOCK

CANADIAN SERIAL NO. . . . . AND UP

PUMP AND SEAL AND PACKING DISASSEMBLY AND REASSEMBLY

This pump requires little service due to its rugged, minimum-maintenance design. If it becomes necessary to inspect or replace components in and adjacent to the rotating assembly, however, follow these instructions, which are keyed to the sectional view (see figure 1) and the accompanying parts list.

Pump Disassembly

WARNING

Before attempting to open or service the pump:

1. Familiarize yourself with this manual.
2. Disconnect the power source to ensure that the pump will remain inoperative.
3. Allow the pump to cool if overheated.
4. Vent the pump slowly and cautiously.
5. Close the suction and discharge valves.
6. Check the temperature before opening any covers, plates, or plugs.
7. Drain the pump.

Disconnect the power source, making certain that it will remain inoperative while the pump is being serviced, and close all connecting valves.

Remove the volute housing drain plug (39) to drain the pump. Clean and reinstall the plug after the pump has been drained.

For access to the rotating assembly, remove hex nuts (6 and 36) securing the volute housing (1) and seal plate (40) to the pedestal (18), and separate the assemblies.

To remove the impeller (2), immobilize it by placing a block of wood between the vanes. Loosen the set screws (54) and inserts (55), and remove the impeller nut (47).

Slide the impeller off the shaft (25), retaining the impeller key (56). Use caution when sliding the impeller off the shaft; tension on the seal spring will be released as the impeller is removed.

Seal and Packing Disassembly

Remove the seal spring. Using a stiff wire with a hooked end if necessary, remove the remainder of the seal components.

Slide the seal plate off the shaft. Remove the oil seal (4). Disengage the gland nuts (32), and remove the gland clips (33) and the split packing gland (34). Remove the packings (38).

Clean the seal cavity, the packing cavity, and the shaft with a soft cloth soaked in cleaning solvent.

WARNING

Most cleaning solvents are toxic and flammable. Use them only in a well-ventilated area free from excessive heat, sparks, and flame. Read and follow all precautions printed on solvent containers.

ADJUSTABLE WEAR RING DISASSEMBLY AND REASSEMBLY

Inspect the adjustable wear ring (49) and replace if scored or worn. For access to the wear ring, slip the volute housing and attached wear ring off the suction plate (48). Disengage the hex nuts (43), and slip the wear ring off the studs (41).

Replace the wear ring O-ring (44), and secure the wear ring to the volute housing. Replace the suction plate O-ring (45) and position the wear ring and volute housing on the suction plate. Make certain that the O-rings are not pinched or sheared during reassembly

Seal and Packing Reassembly

The seal is not normally reused because of the high polish on its lapped faces, but if it is necessary to reuse the old seal, wash all metallic parts in cleaning solvent and dry thoroughly.

Inspect the seal components for wear, scoring, grooves, and other damage that might cause leakage. If any components are worn, replace the complete seal; never mix old and new seal parts.

CAUTION

This seal is not designed for operation at temperatures above 160°F. Do not use at higher operating temperatures.

See figure 2 for the correct order of installation of seal components.

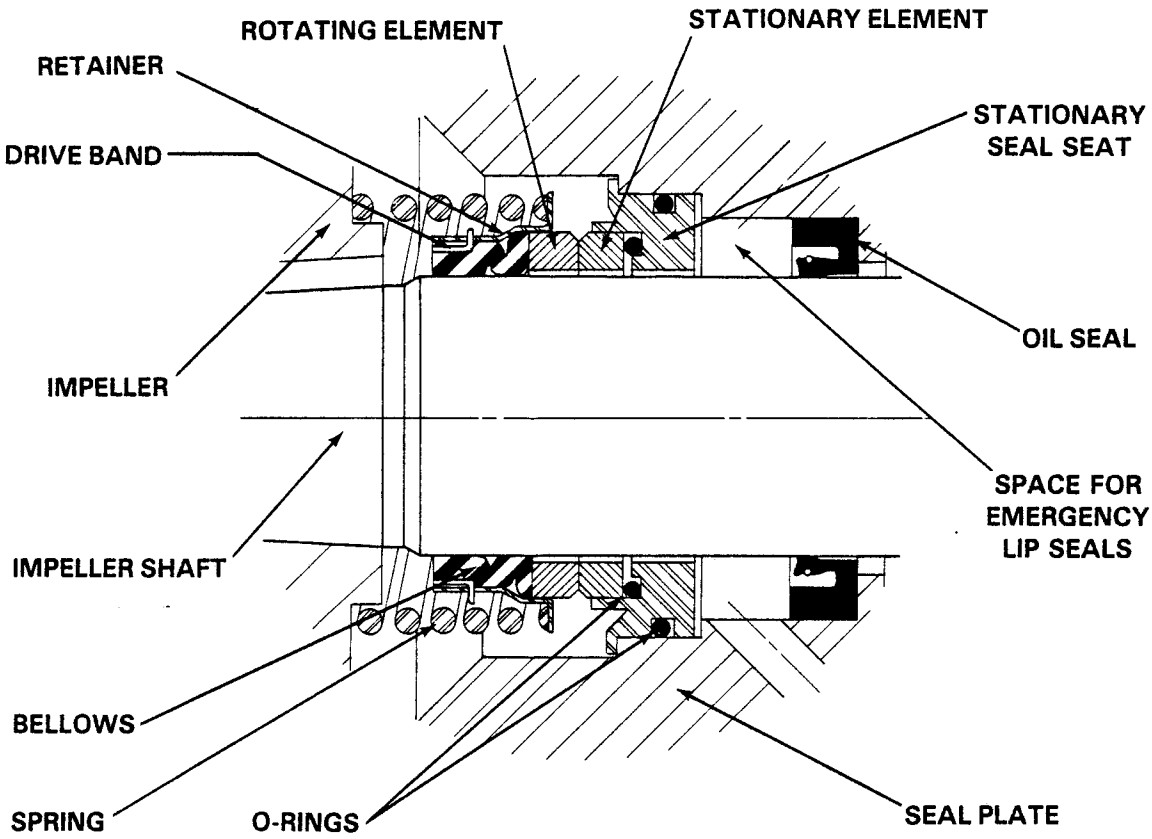

Figure 2. 12590-B Seal Assembly

Inspect the packings and replace if necessary. Dip new packings in non-detergent SAE No. 30 oil before installation.

Install the packings, split packing gland, and gland clips in the seal plate. Install the gland nuts and draw up evenly until they are snug, then back off the nuts until they are only finger tight.

Install the oil seal in the seal plate, and position the seal plate on the shaft.

Place a drop of light lubricating oil on the lapped faces of the seal and lubricate the stationary seat O-rings with soft grease or oil.

Install the stationary seat O-rings in the stationary seat, and position the stationary seat, and stationary and rotating elements on the shaft. Lubricate the bellows with soft grease or oil, and install the bellows assembly. Install the seal spring, making certain that all components of the seal are seated squarely.

Pump Reassembly

The impeller wear ring (46) is welded to the impeller. Inspect this assembly, and replace if cracked or badly worn. Install the impeller shaft key, and slide the impeller on the shaft. Check that the key is seated properly and projects no more than 1/8" beyond the impeller.

Install the inserts and set screws into the impeller locknut — using Loctite #35 on the set screws — then torque the set screws to 18 ft. lbs.

Replace the volute housing gasket (37) and secure the volute housing and seal plate to the pedestal.

A clearance of approximately .015 inch between the impeller assembly and the adjustable wear ring is necessary for maximum pump efficiency.

To adjust wear ring (49) to a .015 inch impeller clearance, loosen the jam nuts (42). Tighten hex nuts (43) until the adjustable wear ring is in contact with the impeller assembly. Back off the hex nuts a half turn to obtain .015 inch clearance, then secure the adjustable wear ring by tightening the jam nuts.

Add clean liquid to the volute, and make certain that all piping is securely tightened before starting the pump.

LUBRICATION

Seal Assembly

Before starting the pump, fill the seal bottle oiler (10) with SAE No. 30 non-detergent motor oil. Remove the air vent fitting (9) when filling the seal bottle oiler, and replace the fitting when the bottle oiler is filled.

Bearings

When shipped from the factory, this pump contained sufficient grease to lubricate the bearings for approximately 5,000 operating hours. Do not lubricate sooner than required. When additional grease is required, remove the vented pedestal plug (20), and fill the cavity with 1 ¼ lbs. of No. 0 pressure gun grease. Clean and reinstall the vented plug.

For U.S. and International Warranty Information,
Please Visit www.grpumps.com/warranty
or call:
U.S.: 419—755—1280
International: +1—419—755—1352

For Canadian Warranty Information,
Please Visit www.grcanada.com/warranty
or call:
519—631—2870

THE GORMAN-RUPP COMPANY • MANSFIELD, OHIO
GORMAN-RUPP OF CANADA LIMITED • ST. THOMAS, ONTARIO, CANADA