INSTALLATION, OPERATION, PARTS LIST, AND MAINTENANCE MANUAL

ACE

GORMAN-RUPP

OM-01363-0E04

August 11, 1980

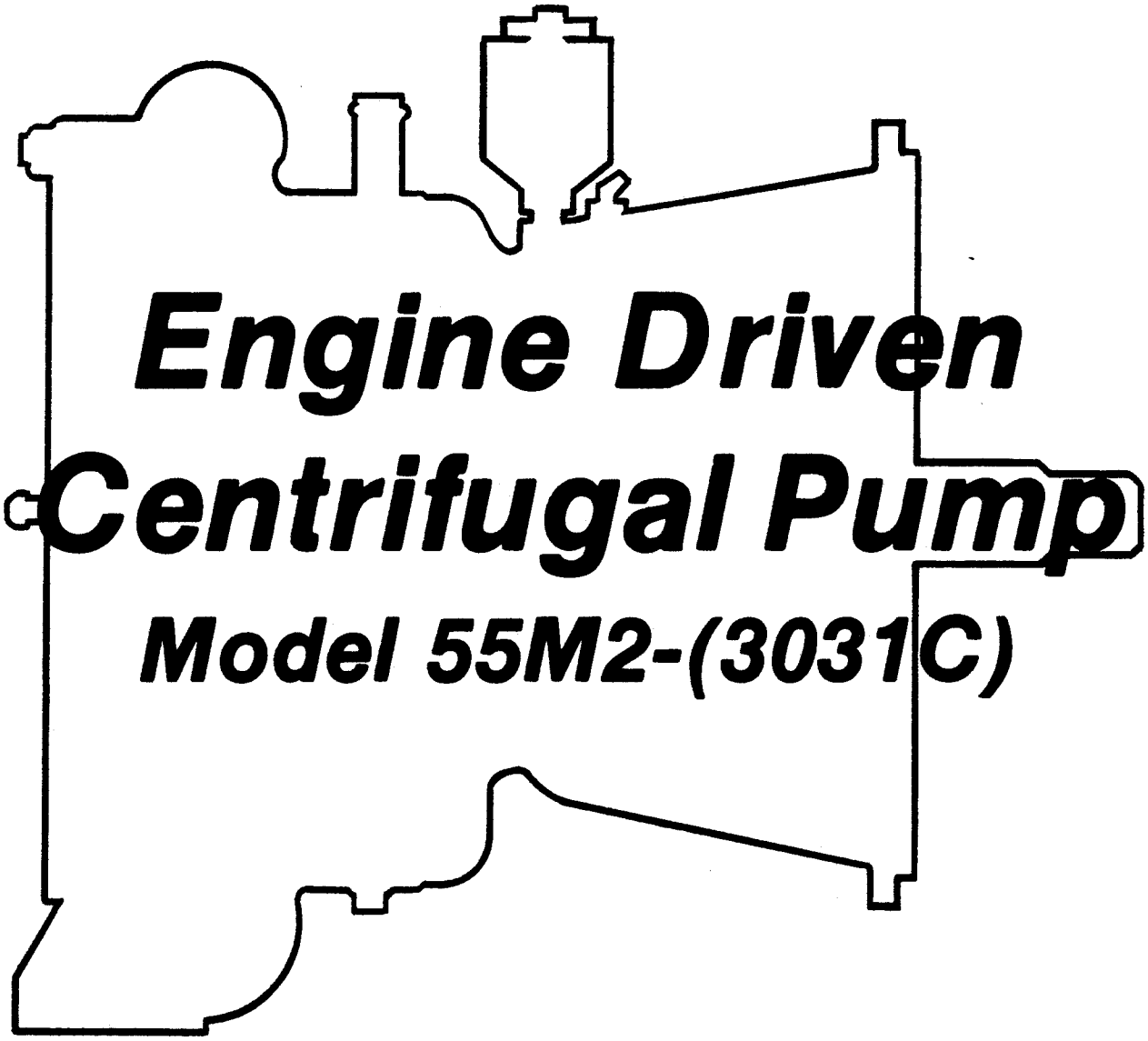

Engine Driven Centrifugal Pump

Model 55M2-(3031C)

THE GORMAN-RUPP COMPANY • MANSFIELD, OHIO

GORMAN-RUPP OF CANADA LIMITED • ST. THOMAS, ONTARIO, CANADA

Printed in U.S.A.

Copyright by the Gorman-Rupp Company

This Installation, Operation, and Maintenance Manual is designed specifically to help you get the best performance and longest life from your Gorman-Rupp pump.

This pump is a 50 Series, enclosed impeller, centrifugal model. It is specifically designed for the pumping of clean liquids at high heads and high discharge pressures.

If there are any questions regarding the pump which are not covered in this manual or in other literature accompanying the unit, please contact your Gorman-Rupp distributor, or write:

The Gorman-Rupp Company
P.O. Box 1217
Mansfield, Ohio 44902

Gorman-Rupp of Canada Limited
70 Burwell Road
St. Thomas, Ontario N5P 3R7

For information or technical assistance on the power source, contact the power source manufacturer's local dealer or representative.

The following are used to alert maintenance personnel to procedures which require special attention, to those which could damage equipment, and to those which could be dangerous to personnel:

NOTE

Instructions to aid in installation, operation, or maintenance or which clarify a procedure.

CAUTION

Instructions which must be followed to avoid causing damage to the product or other equipment incidental to the installation. These describe the procedure required and the damage which could result from failure to follow the procedure.

WARNING

Instructions which must be followed to avoid causing injury or death to personnel. These describe the procedure required and the injury which could result from failure to follow the procedure.

TABLE OF CONTENTS

WARNINGS	Section A
INSTALLATION	Section B
OPERATION	Section C
TROUBLESHOOTING	Section D
MAINTENANCE AND REPAIR	Section E
WARRANTY	

WARNINGS

THESE WARNINGS APPLY TO ALL ENGINE DRIVEN PUMPS. REFER TO THE MANUAL ACCOMPANYING THE ENGINE BEFORE ATTEMPTING TO START THE ENGINE.

Before attempting to open or service the pump:

1. Familiarize yourself with this manual.
2. Disconnect the power source to ensure that the pump will remain inoperative.
3. Allow the pump to cool if overheated.
4. Vent the pump slowly and cautiously.
5. Close the suction and discharge valves.
6. Check the temperature before opening any covers, plates, or plugs.
7. Drain the pump.

Do not attempt to pump volatile or corrosive materials for which this pump has not been designed.

After the pump has been located in its operating position, make certain that the pump has been secured before attempting to operate it.

Do not operate the pump without shields and/or guards in place over drive shafts, belts and/or couplings, or other rotating parts. Exposed rotating parts can catch clothing, fingers, or tools, causing severe injury to personnel.

Do not operate the pump against a closed discharge valve for long periods of time. This could bring the liquid to a boil, build pressure, and cause the pump to rupture or explode.

Overheated pumps can cause severe burns and injury. If overheating of the pump casing occurs:

1. Stop the pump immediately.
2. Allow the pump to cool.
3. Refer to instructions in this manual before restarting the pump.

Do not remove plates, covers, gauges, pipe plugs, or fittings from an overheated pump. Vapor pressure within the pump can cause parts being disengaged to be ejected with great force. Allow the pump to cool before servicing.

Do not operate an internal combustion engine in an explosive atmosphere. When operating internal combustion engines in an enclosed area, make certain that exhaust fumes are piped to the outside. These fumes contain carbon monoxide, a deadly gas that is colorless, tasteless, and odorless.

Fuel used by internal combustion engines presents an extreme explosion and fire hazard. Make certain that all fuel lines are securely connected and free of leaks. Never refuel a hot or running engine. Avoid overfilling the fuel tank. Always use the correct type of fuel.

Never tamper with the governor to gain more power. The governor establishes safe operating limits that should not be exceeded.

INSTALLATION

Seldom are two pump installations identical. The information presented in this section is a summary of the recommended installation practices related to inspection, pump positioning, hardware, suction and discharge piping, and sumps. For further assistance, contact your Gorman-Rupp distributor or the Gorman-Rupp Company.

PREINSTALLATION INSPECTION

The pump assembly was inspected and tested before it was shipped from the factory. Before installation, inspect the pump for damage which may have occurred during shipment. Check as follows:

a. Inspect the pump assembly for cracks, dents, damaged threads, and other obvious damage.

b. Check for and tighten loose bolts, nuts, cap screws, and other attaching hardware. Since gaskets tend to shrink after drying, check for and tighten loose nuts and cap screws securing mating surfaces.

c. Carefully read all tags, decals, and markings on the pump assembly, and perform all duties indicated. Note the direction of rotation indicated on the pump.

d. Check all lubricant levels and lubricate as necessary. Refer to the MAINTENANCE AND REPAIR section of this manual.

POSITIONING THE PUMP

Mounting

Locate the pump in an accessible place as close as practical to the liquid to be pumped. Level mounting is essential for proper operation. The pump may have to be supported to provide for level operation or to eliminate vibration.

Lifting

WARNING

Use lifting and moving equipment in good repair and with adequate capacity to prevent injuries to personnel or damage to equipment.

Make sure that hoists and other lifting equipment are of sufficient capacity to safely handle the pump assembly. If chains and cables are used, make certain that they are positioned so that they will not damage the pump, and so that the load will be balanced.

CAUTION

The pump assembly can be seriously damaged if the cables or chains used to lift and move the unit are improperly wrapped around it.

SUCTION AND DISCHARGE PIPING

Materials

Either pipe or hose may be used for suction and discharge lines, but hose used in suction lines must be the rigid-wall, reinforced type to prevent collapse under suction. Using pipe couplings in suction lines is not recommended.

Line Configuration

Keep suction and discharge lines as straight as possible to minimize friction losses. Make minimum use of elbows and fittings, which substantially increase friction loss. If elbows are necessary, use the long-radius type to minimize friction loss.

Connections to Pump

Never pull a pipe line into place by tightening the flange bolts. The connecting flange must be aligned exactly with the pump port. Lines near the pump must be independently supported to avoid strain on the pump which could cause serious vibration, decreased bearing life, and increased shaft and seal wear. Hose-type lines should have supports strong enough to secure the line when it is filled with liquid and under pressure.

Gauges

Most pumps are drilled and tapped for installing discharge pressure and vacuum suction gauges. If these gauges are desired for pumps that are not tapped, drill and tap the suction and discharge lines close to the pump before installing the lines.

SUCTION LINES

To avoid air pockets which could affect pump priming, the suction line must be as short and direct as possible. When operation involves a suction lift, the line must always slope upward to the pump from the source of the liquid being pumped; if the line slopes down to the pump at any point along the suction run, air pockets will be created.

Fittings

Suction lines should be the same size as the pump inlet. If reducers are used in suction lines, they should be the eccentric type, and should be installed with the flat part of the reducers uppermost to avoid creating air pockets. Valves are not normally used in suction lines, but if a valve is used, install it with the stem down or to either side to avoid air pockets.

Strainers

Install a strainer at the end of the suction line to avoid possible clogging or damage to the pump. The total area of the openings in the strainer should be at least three or four times the cross section of the suction line, but no opening should be larger than the solids handling capability of the pump. Clean the strainer regularly during operation.

Sealing

All connections in the suction line should be sealed with pipe dope to ensure an airtight seal. Even a slight leak will affect priming, head, and capacity, especially when operating with a high suction lift. After installation, inspect the suction line carefully for potential leaks.

DISCHARGE LINES

Throttling Valves

If a throttling valve is desired, install it in the discharge line. Use a valve as large as the largest pipe in the line to minimize friction losses. Never install a throttling valve in the suction line.

Check Valves

A check valve in the discharge line is normally recommended, but is not necessary in low discharge head applications.

With high discharge heads, install a throttling valve and a check valve in the discharge line to protect the pump from excessive shock pressure and reverse rotation when it is stopped.

Do not terminate the discharge line at a level lower than that of the liquid being pumped unless a siphon breaker is used in the line. Otherwise, a siphoning action could result, causing damage to the pump.

SUCTION LINE POSITIONING

The depth of submergence of the suction line is critical to efficient pump operation. Figure 1 shows recommended minimum submergence vs. velocity.

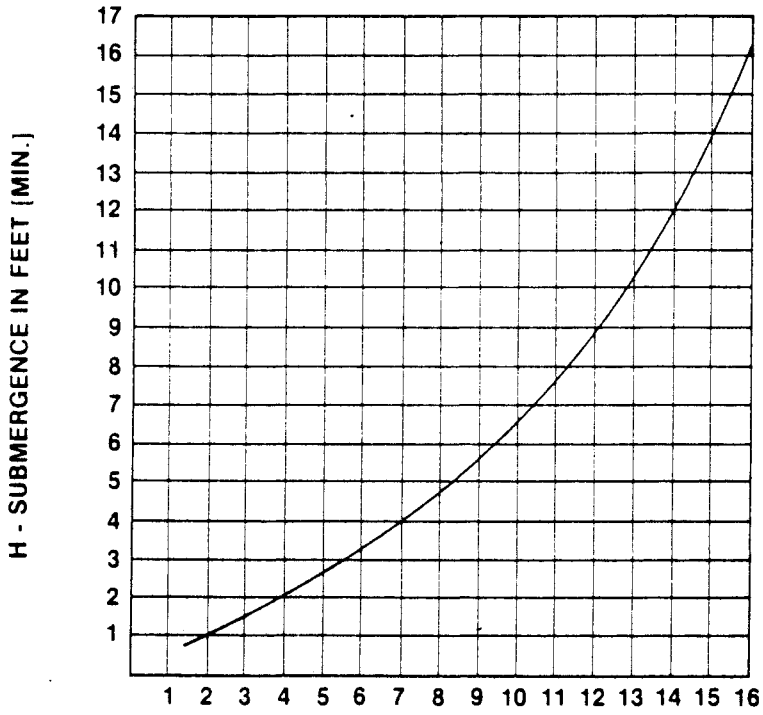

$$\text{VELOCITY IN FEET PER SEC.} = \frac{\text{QUAN. (G.P.M.)} \times .321}{\text{AREA}} \quad \text{OR} \quad \frac{\text{G.P.M.} \times .4085}{D^2}$$

Figure 1. Recommended Minimum Suction Line Submergence Vs. Velocity

OPERATION

WARNING

Do not attempt to pump volatile or corrosive materials for which this pump has not been designed.

PRIMING

Install the pump and piping as described in INSTALLATION. Make sure that the piping connections are tight, and that the pump is securely mounted. Check that the pump is properly lubricated (see LUBRICATION in MAINTENANCE AND REPAIR).

This is not a self-priming pump and therefore will normally require an external priming device. Many Gorman-Rupp pumps are equipped with an exhaust primer or a hand-operated vacuum pump for priming purposes. Pumps not equipped with either of these devices require the use of an external priming device such as an ejector or vacuum pump.

Normally, pumps are equipped with a spring-loaded check valve, and this valve should be closed before priming. Once the pump is primed, close the valve between the priming device and the pump so that the prime will not be lost.

Hand Primers

Hand-operated primers are usually mounted on the pump and, when operated, draw air out of the suction line and volute.

To prime a pump with a hand vacuum pump, open the cock on the pump priming line. Operate the hand pump until liquid flows out of the check valve on the bottom of the primer pump. Once the pump is primed, close the valve located between the primer and the pump so that the prime will not be lost.

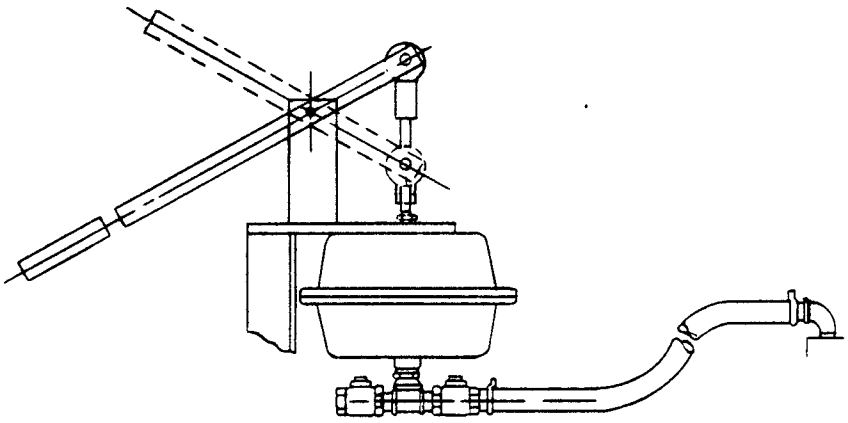

Figure 1. Hand Primer Assembly

Exhaust Primers

Engine driven pumps normally take advantage of the engine exhaust gases by using them to operate an exhaust primer. The exhaust is directed through a venturi which creates a vacuum in the pump volute in order to fill the suction line and volute with liquid.

To prime a pump using an exhaust primer, open the gas cock in the priming line and engage the exhaust primer until liquid is thrown out of the ejector nozzle.

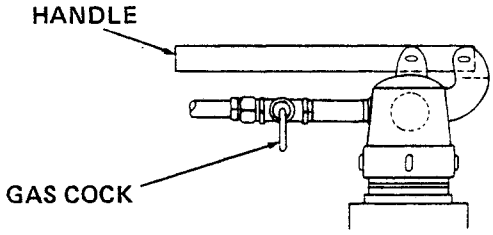

Figure 1. Exhaust Primer Assembly

Auxiliary Ejectors

Ejectors function much like exhaust primers. They may be operated by steam, compressed air, water or exhaust gases. To prime a pump using an ejector, open the gas cock in the priming line and operate the ejector until liquid is thrown out the ejector nozzle.

Vacuum Pumps

Air can be exhausted to prime a pump by using a vacuum pump. Either a wet type or a dry type vacuum pump may be used; however, a wet type is preferred since it will not be damaged if liquid enters it. If a dry vacuum pump is used, provisions must be made to keep liquid from entering it.

STARTING

Starting procedures will vary slightly depending on the pump application, type of priming device, and type of drive.

Consult the operating manual furnished with the power source.

OPERATION

Lines

Open all valves in the discharge line and start the power source. Priming is indicated by a positive reading on the discharge pressure gauge or by quieter operation. The pump may not prime immediately because the suction line must first fill with liquid. If the pump fails to prime within five minutes, stop it and check the suction line for leaks.

After the pump has been primed, partially close the discharge line throttling valve in order to fill the line slowly and guard against excessive shock pressure which could damage pipe ends, gaskets, sprinkler heads, and any other fixtures connected to the line. When the discharge line is completely filled, adjust the throttling valve to the required discharge flow rate.

Leakage

No leakage should be visible at pump mating surfaces, or at pump connections or fittings. Keep all line connections and fittings tight to maintain maximum pump efficiency.

Overheating

Overheating can occur if the valves in the suction or discharge lines are closed. Operating against closed valves could bring the liquid to a boil, build pressure, and cause the pump to rupture or explode. If overheating occurs, stop the pump and allow it to cool before servicing it. Refill the volute casing with cool liquid.

WARNING

Do not remove plates, covers, gauges, pipe plugs, or fittings from an overheated pump. Vapor pressure within the pump can cause parts being disengaged to be ejected with great force. Allow the pump to cool before servicing.

Strainer Check

Check the suction strainer regularly during pump operation, or if the pump flow rate begins to drop, and clean it as necessary. Be especially alert for unusual noises when pumping liquids containing solids.

Pump Vacuum Check

Install a vacuum gauge in the system, using pipe dope on the threads.

The pump should pull a vacuum of 20 inches or more of mercury at operating speed with the suction line blocked. If it does not, check for air leaks in the seals or gaskets.

With the pump primed and at operating speed, and the suction line open, read the vacuum gauge. Shut off the pump, keep the vacuum line open, and read the gauge again to see if the vacuum remains at the maximum developed by the pump. If the vacuum falls off rapidly, an air leak exists. If the liquid level at the source of supply remains at a constant level, check to make certain that the air leak is not from the vacuum gauge connection.

STOPPING

After stopping the pump, disconnect the power source to ensure that the pump will remain inoperative.

In below freezing conditions, drain the pump to prevent damage from freezing. Also, clean out any solids by flushing with a hose. Operate the pump for approximately one minute; this will remove any remaining liquid that could freeze the pump rotating parts.

If the pump will be idle, or if it has been pumping liquids containing a large amount of solids, drain the pump, and flush it thoroughly with clean water. To prevent large solids from clogging the drain port and preventing the pump from completely draining, operate the pump during the draining process. Clean out any remaining solids by flushing with a hose.

BEARING TEMPERATURE CHECK

Bearings normally run at higher than ambient temperatures because of heat generated by friction. Temperatures up to 160°F are considered normal for intermediate bearings, and they can operate safely to at least 180°F.

Checking bearing temperatures by hand is inaccurate. They can be measured accurately by placing a contact-type thermometer against the housing. Record this temperature for future reference.

A sudden increase in bearing temperatures is a warning that the bearings are at the point of failing to operate properly. Make certain that the bearing lubricant is of the proper viscosity and at the correct level (see LUBRICATION in MAINTENANCE AND REPAIR). Bearing overheating can also be caused by shaft misalignment and/or excessive vibration.

When pumps are first started, the bearings may seem to run at temperatures above normal. Dynamic operation will bring the temperatures down to normal levels.

TROUBLESHOOTING

WARNING

Before attempting to open or service the pump:

1. Consult pump service manual.
2. Disconnect the power source to ensure that the pump will remain inoperative.
3. Allow pump to cool if overheated.
4. Close suction and discharge valves.
5. Drain pump.

Trouble	Possible Cause	Probable Remedy
PUMP FAILS TO PRIME	Air leak in suction line.	Correct leak.
	Lining of suction hose collapsed.	Replace suction hose.
	Suction check valve clogged or binding.	Clean valve.
	Leaking or worn seal or pump gasket.	Check pump vacuum. Replace leaking or worn seal or gasket.
	Suction lift or discharge head too high.	Check piping installation and install bypass line if needed. See INSTALLATION.
	Suction strainer clogged.	Clean suction strainer.
PUMP STOPS OR FAILS TO DELIVER RATED FLOW OR PRESSURE	Air leak in suction line.	Correct leak.
	Suction intake not submerged at proper level or sump too small.	Check installation and correct as needed. Check submergence chart (Section B, page 4).
	Lining of suction hose collapsed.	Replace suction hose.
	Impeller or other wearing parts worn or damaged.	Check impeller clearance. Replace worn parts as needed.
	Impeller clogged.	Free impeller of debris.
	Pump speed too slow.	Check driver output.
	Discharge head too high.	Install bypass line.
	Suction lift too high.	Reduce suction lift.

Trouble	Possible Cause	Probable Remedy
PUMP STOPS OR FAILS TO DE-LIVER RATED FLOW OR PRESSURE (cont)	Leaking or worn seal or pump gaskets.	Check pump vacuum. Replace leaking or worn seal or pump gaskets.
	Suction strainer clogged.	Clean suction strainer.
PUMP REQUIRES TOO MUCH POWER	Pump speed too high.	Reduce speed of power source.
	Discharge head too low.	Adjust discharge valve.
	Liquid solution too thick.	Dilute if possible.
PUMP CLOGS FREQUENTLY	Discharge flow too slow.	Open discharge valve fully to increase flow rate, and run engine at maximum governed speed.
	Suction check valve clogged or binding.	Free valve, and clean or replace it.
EXCESSIVE NOISE	Cavitation in pump.	Reduce suction lift and/or friction losses in suction line.
	Pumping entrained air.	Locate and eliminate source of air bubble.
	Pump or drive not securely mounted.	Secure mounting hardware.
	Impeller clogged or damaged.	Clean out debris; replace damaged parts.
BEARINGS RUN TOO HOT	Bearing temperature is high, but within limits.	Check bearing temperature frequently to monitor any increase.
	Low or incorrect lubricant.	Check for proper type and level of lubricant.
	Suction and discharge lines not properly. supported.	Check piping installation for proper support.
	Drive misaligned.	Align drive properly.

Engine Driven Centrifugal Pump

Model 55M2-(3031C)

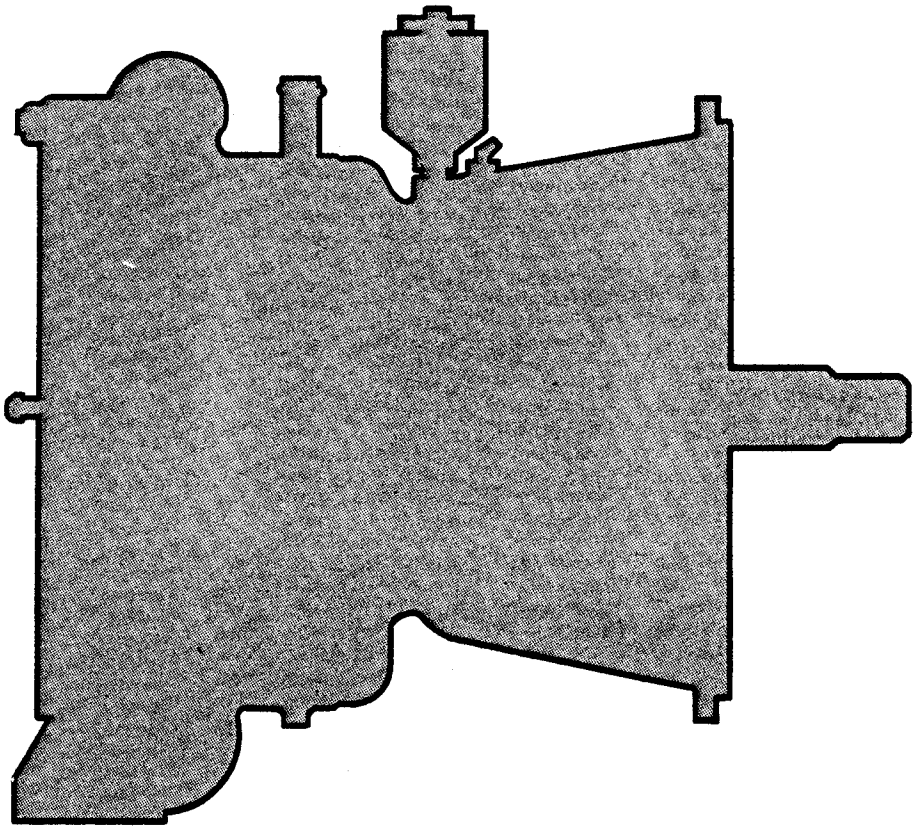

The only moving parts of this pump are the impeller, seal rotating elements, and the shaft. The wear rings, impeller, and seal, which receive the most wear, are easily accessible and can be replaced by removing the cover without disturbing the volute casing and piping. Maintenance and replacement of these parts will maintain the peak operating efficiency of the pump.

SECTIONAL DRAWING

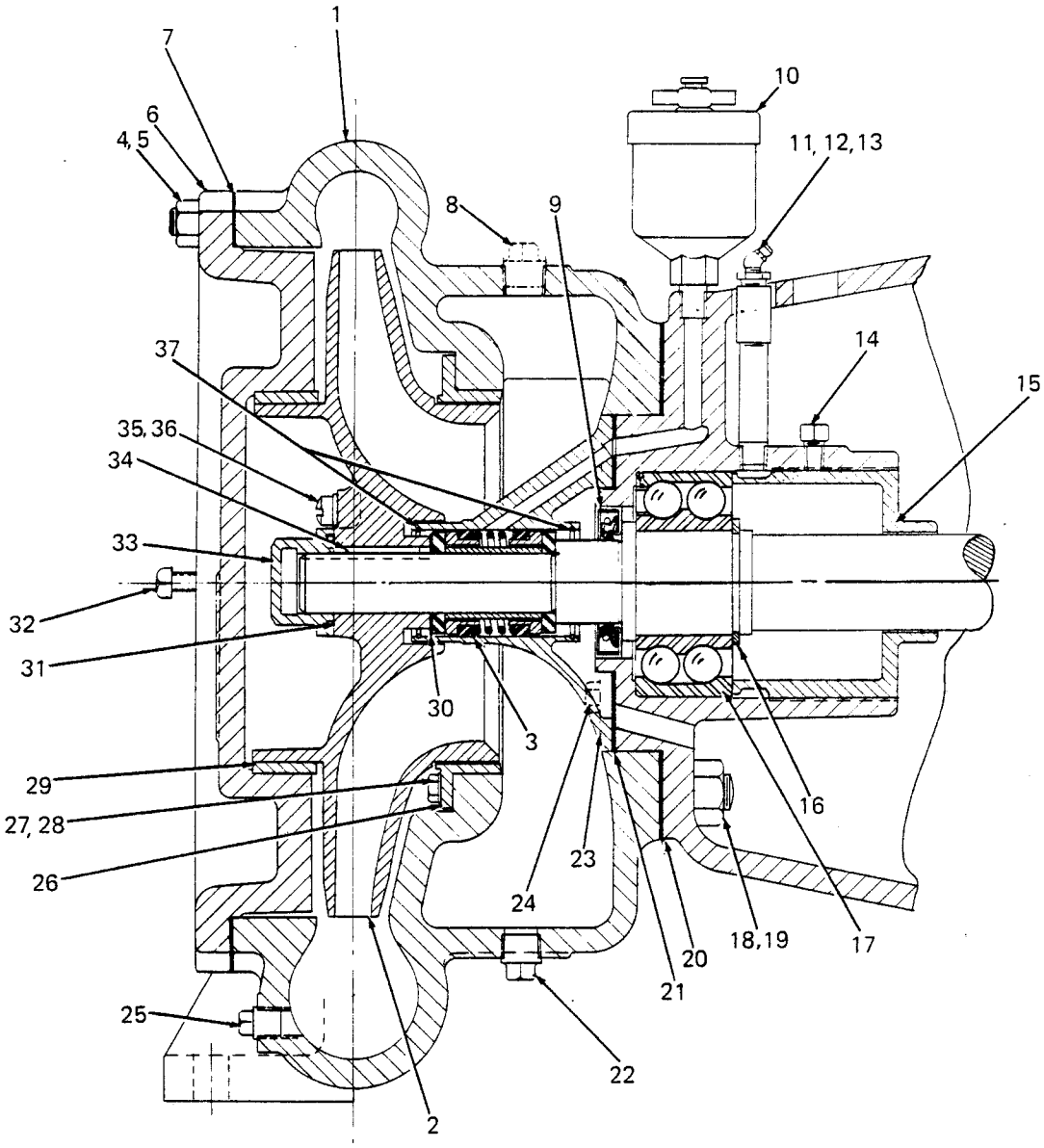

Figure 1. Pump End Only Model 55M2-(3031C)

PARTS LIST

ITEM NO.	MODEL 55M2-(3031C) PART NAME	PART NUMBER	MATERIAL CODE	NUMBER REQUIRED
1	VOLUTE CASING	2055	10030	1
2	☆IMPELLER	2137-A	10010	1
3	☆SEAL ASSEMBLY	GS-1250		1
4	STUD	C-1008	15991	12
5	HEX NUT	D-10	15991	12
6	COVER PLATE	953-E	10010	1
7	☆COVER GASKET	1210-G	18000	1
8	ACCESSORY PLUG	P-08	11990	1
9	☆OIL SEAL	S-79		1
10	☆SEAL GREASE CUP	S-1509		1
11	☆BEARING LUBE FITTING	S-194		1
12	PIPE COUPLING	AE-04	11990	1
13	PIPE NIPPLE	T-0412	15070	1
14	☆SQUARE HEAD SETSCREW	G-0604	15990	1
15	☆BEARING RETAINING NUT	2196	10010	1
16	☆BEARING RETAINING RING	S-215		1
17	☆BALL BEARING	S-1033		1
18	STUD	C-1209	15991	8
19	HEX NUT	P-12	15991	8
20	☆VOLUTE GASKET	922-G	18000	1
21	☆SEAL HOUSING GASKET	2178-G	18000	1
22	VOLUTE DRAIN PLUG	P-08	11990	1
23	☆SEAL HOUSING	2178	14000	1
24	HEX HEAD CAP SCREW	B-0603	14990	6
25	VOLUTE DRAIN PLUG	P-06	11990	1
26	☆IMPELLER REAR WEAR RING	2057	14000	1
27	LOCKWASHER	J-05	15991	2
28	HEX HEAD CAP SCREW	B-0503	14990	2
29	☆IMPELLER FACE WEAR RING	12095	14000	1
30	☆IMPELLER SHIM SET	37-J	17090	1
31	☆IMPELLER CAP O-RING	S-461		1
32	☆SQUARE HEAD SETSCREW	BX-0605	15990	6
33	☆IMPELLER CAP NUT	2177-A	14000	1
34	☆SHAFT KEY	N-0407	15990	1
35	LOCKWASHER	J-06	15991	1
36	☆FILLISTER HEAD SCREW	AW-0602	14990	1
37	☆ LOCK SPRING	947-A	16030	2
NOT SHOWN:				
	STRAINER	S-1529		1
	STREET ELBOW	RS-04	11990	1

☆Indicates parts recommended for stock

Note: This parts list applies to pumps from serial no.

Above serial numbers do not apply to pumps made in Canada.

CANADIAN SERIAL NO. . . . . AND UP

SECTIONAL DRAWING

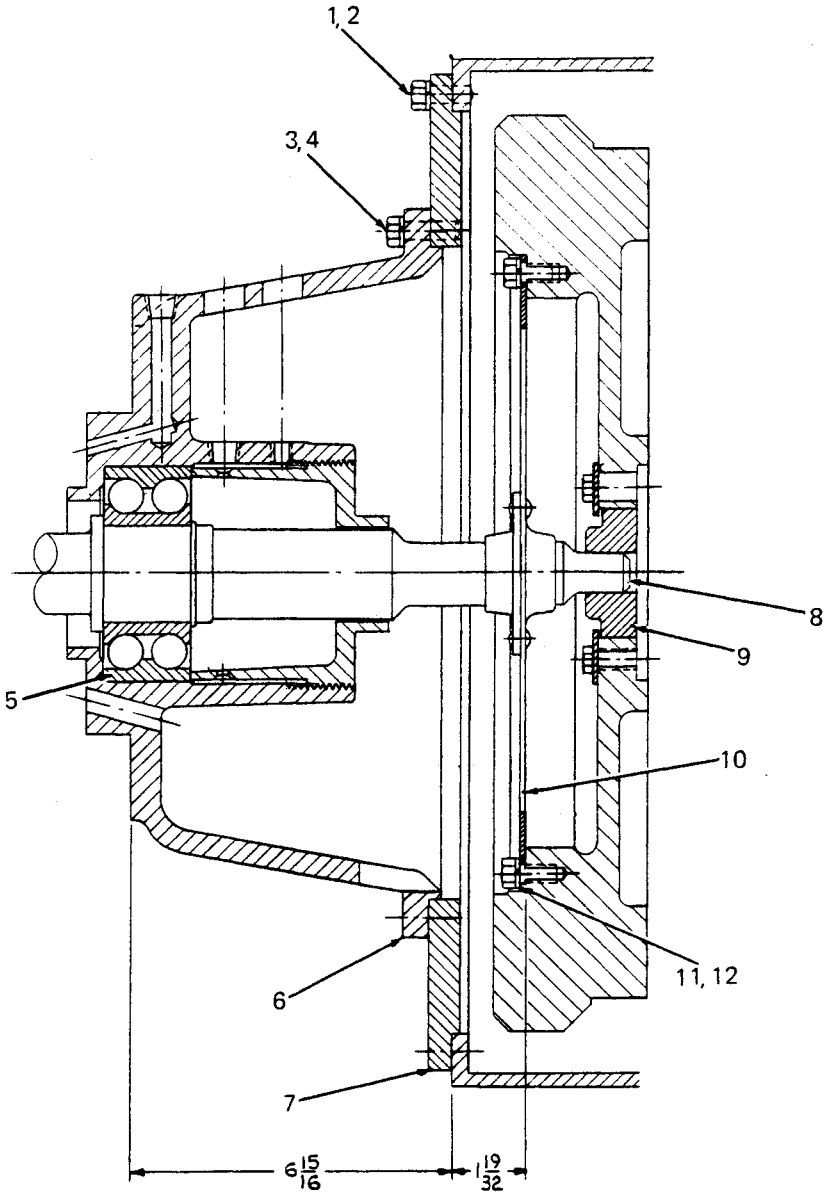

Figure 2. Drive Assembly

PARTS LIST

ITEM NO.	DRIVE ASSEMBLY PART NAME	PART NUMBER	MATERIAL CODE	NUMBER REQUIRED
1	HEX HEAD CAP SCREW	B-0705	15991	12
2	LOCKWASHER	J-07	15991	12
3	HEX HEAD CAP SCREW	B-0605	15991	12
4	LOCKWASHER	J-06	15991	12
5	☆BEARING	S-1033		1
6	INTERMEDIATE	2175-C	10010	1
7	☆ADAPTER RING	3283	10010	1
8	☆IMPELLER SHAFT	3441	16040	1
9	☆PILOT BUSHING	2479	15010	1
10	DRIVE PLATE	2194	24020	1
11	HEX HEAD CAP SCREW	B-0603	15991	8
12	LOCKWASHER	J-06	15991	8

☆Indicates parts recommended for stock

ENGINE SEPARATION

If it is necessary to separate the pump from the engine, disengage the hex head cap screws (1) securing the adapter ring (7) to the engine housing, and separate the assemblies.

It is not necessary to remove the drive plate assembly (10) unless the pilot bushing (9) needs replacing. To remove the drive plate assembly, disengage the attaching hex head cap screws (11).

The pilot bushing is a press fit in the flywheel assembly. If replacing the pilot bushing be certain to apply "Never-Seez" compound or equivalent to the inside diameter of the bushing before reassembling the engine and pump end.

CAUTION

If the drive assembly is not properly positioned on the shaft, a preload condition can occur and cause premature thrust bearing failure.

PUMP AND SEAL DISASSEMBLY AND REASSEMBLY

This pump requires little service due to its rugged, minimum-maintenance design. If it becomes necessary to inspect and/or replace the wearing parts, however, follow these instructions, which are keyed to the sectional view (see figure 1) and the accompanying parts list.

Pump Disassembly

Disconnect the power source, making certain that it will remain inoperative while the pump is being serviced, and close all connecting valves. Remove the volute drain plugs (22 and 25) to drain the pump.

Remove the hex nuts (5) securing the cover plate (6) to the volute casing (1) for access to the wear rings (26 and 29), impeller (2), and seal assembly (3).

To remove the impeller, remove the fillister head screw (36), impeller cap nut (33), and O-ring (31). The impeller is keyed onto the shaft and may require the use of an impeller puller for removal. Remove the impeller and replace it if cracked or badly worn.

Remove the impeller adjusting shims (30). For ease of reassembly, tag and tie the shims, or measure and record their thickness.

Inspect the wear ring, and replace it if scored or worn. If impeller face wear ring (29) is scored or worn, use Loctite Bearing Mount or equivalent to assemble the replacement ring to the cover plate.

Seal Disassembly

Before removing the seal assembly, turn the cross arm on the seal grease cup (10) clockwise until it rests against the cover (see figure 4). This will prevent the grease in the cup from escaping after the seal is removed.

Remove the seal lock spring (37) and carefully remove the seal spring, the shaft sleeve, and the stationary and rotating seal elements, using a still wire with a hooked end if necessary.

Clean the seal cavity and shaft with a soft cloth soaked in cleaning solvent.

WARNING

Most cleaning solvents are toxic and flammable. Use them only in a well-ventilated area free from excessive heat, sparks, and flame. Read and follow all precautions printed on solvent containers.

Seal Reassembly

The seal is not normally reused because of the high polish on its lapped faces, but if it is necessary to reuse the old seal, wash all metallic parts in cleaning solvent and dry thoroughly.

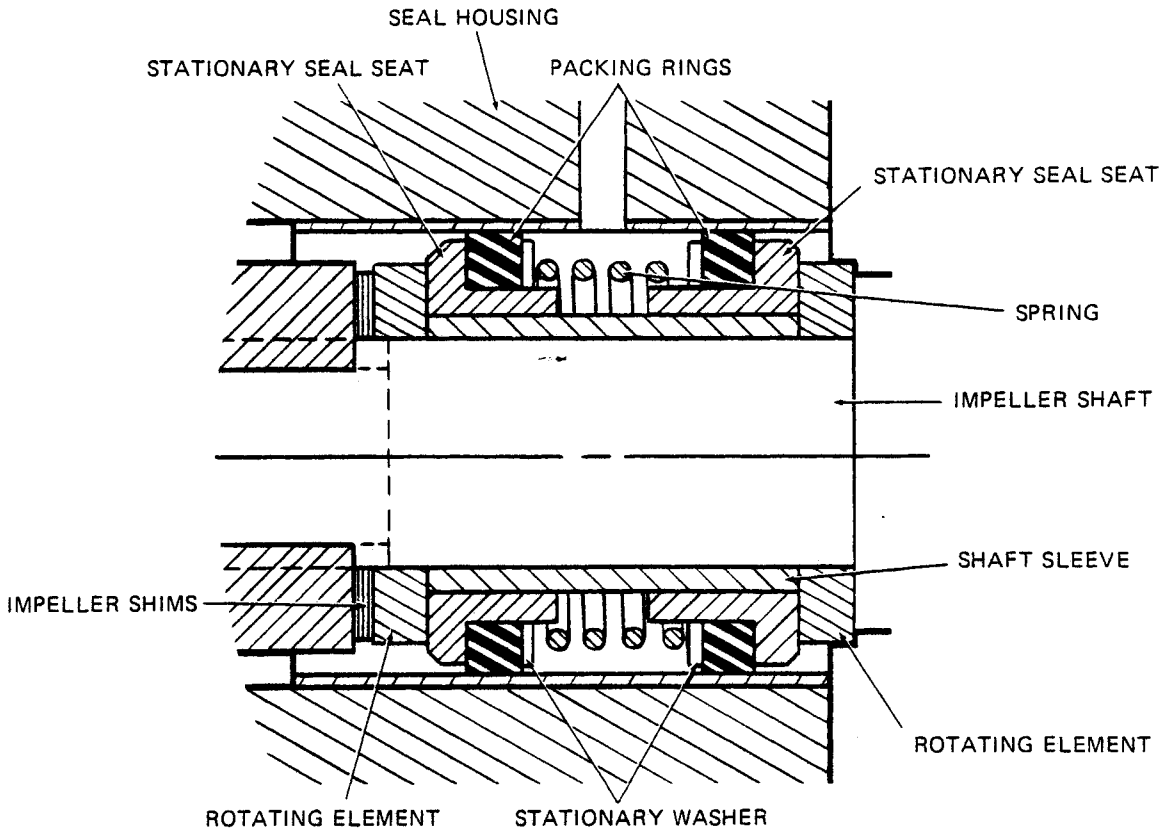

Figure 3. GS-1250 Seal Assembly

Inspect the seal components for wear, scoring, grooves, and other damage that might cause leakage. If any components are worn, replace the complete seal; never mix old and new seal parts. Clean and polish the shaft sleeve, or replace it if there are nicks or cuts on the end.

CAUTION

This seal is not designed for operation at temperatures above 110°F. Do not use at higher operating temperatures.

Reinstall the shaft sleeve, and install the replacement seal as a complete unit.

Lubricate the packing rings with soft grease or oil when installing the seal, and place a drop of light lubricating oil on the lapped faces. Assemble the seal as shown in figure 3.

Reinstall the seal lock spring.

Pump Reassembly

Reinstall the impeller adjusting shims and the impeller. Replace the cap nut O-ring and reinstall the impeller cap nut.

It is necessary for the impeller to be centered in the volute scroll for maximum pump efficiency. Measure this clearance and add or subtract impeller shims until it is reached. When the proper clearance is reached, tighten the impeller cap nut and lock into position with the fillister head screw.

Reassemble the cover plate to the volute casing, replacing the cover gasket (7).

Before starting the pump, turn the shaft to be sure the impeller does not bind or scrape.

Clean and reinstall the volute drain plug.

LUBRICATION

Seal Assembly

Before starting the pump, fill the grease cup through the grease fitting with a good grade of No. 2 pressure gun grease until grease escapes from the relief hole. Turn the grease cup arm counterclockwise until it is at the top of the stem; this will release the spring to apply grease to the seal (see figure 4).

Bearings

When shipped from the factory, the pump contains sufficient grease to lubricate the bearings for approximately 5,000 operating hours. Do not lubricate sooner than required. When additional grease is required, fill the bearing cavity with 1/4 pound of No. 0 pressure gun grease through the bearing lube fitting (11).

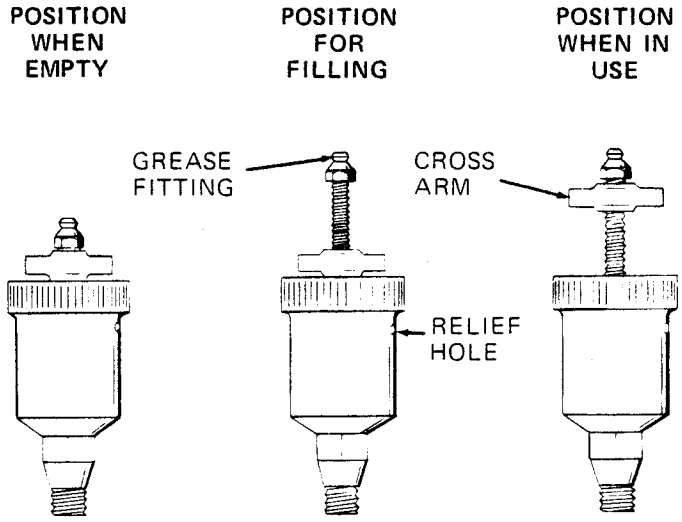

Figure 4. Automatic Lubricating Grease Cup

For U.S. and International Warranty Information,
Please Visit www.grpumps.com/warranty
or call:
U.S.: 419—755—1280
International: +1—419—755—1352

For Canadian Warranty Information,
Please Visit www.grcanada.com/warranty
or call:
519—631—2870

THE GORMAN-RUPP COMPANY • MANSFIELD, OHIO
GORMAN-RUPP OF CANADA LIMITED • ST. THOMAS, ONTARIO, CANADA