ACE

OM-01339-OE02
April 10, 1984

50 SERIES

INSTALLATION, OPERATION, PARTS LIST, AND MAINTENANCE MANUAL

MODEL

54J20-(4031C)

THE GORMAN-RUPP COMPANY • MANSFIELD, OHIO
GORMAN-RUPP OF CANADA LIMITED • ST. THOMAS, ONTARIO, CANADA
Printed in U.S.A.

Copyright by the Gorman-Rupp Company

TABLE OF CONTENTS

INTRODUCTION I-1

WARNINGS - SECTION A A-1

INSTALLATION - SECTION B B-1
PREINSTALLATION INSPECTION B-1
POSITIONING PUMP B-2
Lifting B-2
Mounting B-2
SUCTION AND DISCHARGE PIPING B-2
Materials B-2
Line Configuration B-2
Connections to Pump B-3
Gauges B-3
SUCTION LINES B-3
Fittings B-3
Strainers B-3
Sealing B-4
Suction Lines In Sumps B-4
Suction Line Positioning B-4
DISCHARGE LINES B-5
Siphoning B-5
Valves B-5
ALIGNMENT B-6

OPERATION - SECTION C C-1
PRIMING C-1
Hand-Operated Priming Pump C-2
STARTING C-2
OPERATION C-2
Leakage C-2
Liquid Temperature And Overheating C-3
Strainer Check C-3
Pump Vacuum Check C-3
STOPPING C-4
Cold Weather Preservation C-4
BEARING TEMPERATURE CHECK C-4

PUMP TROUBLESHOOTING - SECTION D D-1

PUMP MAINTENANCE AND REPAIR - SECTION E E-1
PERFORMANCE CURVE E-1
PUMP END ASSY - PARTS LIST E-3
DRIVE ASSY - PARTS LIST E-5
PUMP AND SEAL DISASSEMBLY AND REASSEMBLY E-6
Cover Plate Removal E-6
Impeller Disassembly E-7
Seal Disassembly E-7
Separating Pump From Engine E-7
Impeller Shaft And Bearing Disassembly E-8
Impeller Shaft And Bearing Reassembly E-8
Securing Pump To Engine E-10
Seal Reassembly E-11
Pump Reassembly E-13
Final Pump Reassembly E-14
LUBRICATION E-14
Seal Assembly E-14
Bearings E-14
Engine E-14

INTRODUCTION

This Installation, Operation, and Maintenance Manual is designed to help you achieve the best performance and longest life from your Gorman-Rupp pump.

This pump is a 50 Series, centrifugal model with an enclosed impeller. This pump is designed for pumping clean liquids at high heads and high discharge pressures. The basic material of construction for wetted parts is gray iron with gray iron impeller and wear ring and steel impeller shaft.

If there are any questions regarding the pump or its application which are not covered in this manual or in other literature accompanying this unit, please contact your Gorman-Rupp distributor, or write:

The Gorman-Rupp Company P.O. Box 1217 Mansfield, Ohio 44901	or	Gorman-Rupp of Canada Limited 70 Burwell Road St. Thomas, Ontario N5P 3R7

For information or technical assistance on the engine, contact the engine manufacturer's local dealer or representative.

The following are used to alert maintenance personnel to procedures which require special attention, to those which could damage equipment, and to those which could be dangerous to personnel:

NOTE

Instructions to aid in installation, operation, and maintenance or which clarify a procedure.

CAUTION

Instructions which must be followed to avoid causing damage to the product or other equipment incidental to the installation. These instructions describe the requirements and the possible damage which could result from failure to follow the procedures.

WARNING

These instructions must be followed to avoid causing injury or death to personnel, and describe the procedure required and the injury which could result from failure to follow the procedure.

WARNINGS - SECTION A

THESE WARNINGS APPLY TO 50 SERIES ENGINE DRIVEN PUMPS. REFER TO THE MANUAL ACCOMPANYING THE ENGINE BEFORE ATTEMPTING TO BEGIN OPERATION.

WARNING

Before attempting to open or service the pump:

1. Familiarize yourself with this manual.
2. Switch off the engine ignition key and remove the key to ensure that the pump will remain inoperative.
3. Allow the pump to cool if overheated.
4. Vent the pump slowly and cautiously.
5. Close the suction and discharge valves.
6. Check the temperature before opening any covers, plates, or plugs.
7. Drain the pump.

WARNING

This pump is designed to pump clear water. Do not attempt to pump volatile, corrosive, or flammable liquids which may damage the pump or endanger personnel as a result of pump failure.

WARNING

After the pump has been installed, make certain that the pump and all piping are secure before operation.

WARNING

Do not operate the pump without shields and/or guards in place over rotating parts. Exposed rotating parts can catch clothing, fingers, or tools, causing severe injury to personnel.

WARNING

Overheated pumps can cause severe burns and injury. If overheating of the pump occurs:

1. Stop the pump immediately.
2. Allow the pump to cool.
3. Refer to instructions in this manual before restarting the pump.

WARNING

Do not remove plates, covers, gauges, pipe plugs, or fittings from an overheated pump. Vapor pressure within the pump can cause parts being disengaged to be ejected with great force. Allow the pump to cool before servicing.

WARNING

Do not operate an internal combustion engine in an explosive atmosphere. When operating internal combustion engines in an enclosed area, make certain that exhaust fumes are piped to the outside. These fumes contain carbon monoxide, a deadly gas that is colorless, tasteless, and odorless.

WARNING

Fuel used by internal combustion engines presents an extreme explosion and fire hazard. Make certain that all fuel lines are securely connected and free of leaks. Never refuel a hot or running engine. Avoid overfilling the fuel tank. Always use the correct type of fuel.

WARNING

Never tamper with the governor to gain more power. The governor establishes safe operating limits that should not be exceeded. The maximum continuous operating speed is 1800 RPM.

INSTALLATION - SECTION B

Since pump installations are seldom identical, this section offers only general recommendations and practices required to inspect, position, and arrange the pump and piping.

Most of the information pertains to a standard **static lift application** where the pump is positioned above the free level of liquid to be pumped.

If installed in a **flooded suction application** where the liquid is supplied to the pump under pressure, some of the information such as mounting, line configuration, and priming must be tailored to the specific application. Since the pressure supplied to the pump is critical to performance and safety, **be sure** to limit the incoming pressure to 50% of the maximum pressure developed by the pump.

For further assistance, contact your Gorman-Rupp distributor or the Gorman-Rupp Company.

PREINSTALLATION INSPECTION

The pump assembly was inspected and tested before shipment from the factory. Before installation, inspect the pump for damage which may have occurred during shipment. Check as follows:

a. Inspect the pump for cracks, dents, damaged threads, and other obvious damage.

b. Check for and tighten loose bolts, nuts, capscrews, and other attaching hardware. Since gaskets tend to shrink after drying, check for and tighten loose nuts and capscrews securing mating surfaces.

c. Carefully read all tags, decals, and markings on the pump assembly, and follow the instructions indicated.

d. Check all lubricant levels and lubricate as necessary. Refer to LUBRICATION in the MAINTENANCE AND REPAIR section of this manual and perform duties as instructed.

e. If the pump and engine have been stored for more than 12 months, some of the components or lubricants may have exceeded their maximum shelf life. These **must be inspected or replaced** to ensure maximum pump service.

If the maximum shelf life has been exceeded, or if anything appears to be abnormal, contact your Gorman-Rupp distributor or the factory to determine the repair or updating policy. **Do not** put the pump into service until appropriate action has been taken.

POSITIONING PUMP

Lifting

Use lifting equipment with a capacity of a least **2,750 pounds**. This pump weighs approximately **550 pounds**, not including the weight of accessories and the options. Customer installed equipment such as hoses **must** be removed before attempting to lift.

CAUTION

> The pump assembly can be seriously damaged if the cables or chains used to lift and move the unit are improperly wrapped around the pump.

Mounting

Locate the pump in an accessible place as close as practical to the liquid being pumped. Level mounting is essential for proper operation. The pump may have to be supported or shimmed to provide for level operation or to eliminate vibration.

If the pump has been mounted on a moveable base, make certain the base is stationary by setting the brake and blocking the wheels before attempting to operate the pump.

SUCTION AND DISCHARGE PIPING

Materials

Either pipe or hose may be used for suction and discharge lines; however, the materials must be compatible with the liquid being pumped. If hose is used in suction lines, it must be the rigid-wall, reinforced type to prevent collapse under suction. Using piping couplings in suction lines is not recommended.

Line Configuration

Keep suction and discharge lines as straight as possible to minimize friction losses. Make minimum use of elbows and fittings, which substantially increase friction loss. If elbows are necessary, use the long-radius type to minimize friction loss.

Connections to Pump

Before tightening a connecting flange, align it exactly with the pump port. Never pull a pipe line into place by tightening the flange bolts and/or couplings.

Lines near the pump must be independently supported to avoid strain on the pump which could cause excessive vibration, decreased bearing life, and increased shaft and seal wear. If hose-type lines are used, they should have adequate support to secure them when filled with liquid and under pressure.

Gauges

Most pumps are drilled and tapped for installing discharge pressure and vacuum suction gauges. If these gauges are desired for pumps that are not tapped, drill and tap the suction and discharge lines not less than 18 inches from the suction and discharge ports and install the lines. Installation closer to the pump may result in erratic readings.

SUCTION LINES

To avoid air pockets which could affect pump priming, the suction line must be as short and direct as possible. When operation involves a suction lift, the line must always slope upward to the pump from the source of the liquid being pumped; if the line slopes down to the pump at any point along the suction run, air pockets will be created.

Fittings

Suction lines should be the same size as the pump inlet. If reducers are used in suction lines, they should be the eccentric type, and should be installed with the flat part of the reducers uppermost to avoid creating air pockets. Valves are not normally used in suction lines, but if a valve is used, install it with the stem horizontal to avoid air pockets.

Strainers

If a strainer is furnished with the pump, be certain to use it; any spherical solids which pass through a strainer furnished with the pump will also pass through the pump itself.

If a strainer is not furnished with the pump, but is installed by the pump user, make certain that the total area of the openings in the strainer is at least three or four times the cross section of the suction line, and that the openings will not permit passage of solids larger than the solids handling capability of the pump.

This pump is designed to handle up to 1/2 inch diameter spherical solids.

Sealing

Since even a slight leak will affect priming, head, and capacity, especially when operating with a high suction lift, all connections in the suction line should be sealed with pipe dope to ensure an airtight seal. Follow the sealant manufacturer's recommendations when selecting and applying the pipe dope. The pipe dope should be compatible with the liquid being pumped.

Suction Lines In Sumps

If a single suction line is installed in a sump, it should be positioned away from the wall of the sump at a distance equal to one and one-half times the diameter of the suction line.

If there is a liquid flow from an open pipe into the sump, the flow should be kept away from the suction inlet because the inflow will carry air down into the sump, and air entering the suction line will reduce pump efficiency.

If it is necessary to position inflow close to the suction inlet, install a baffle between the inflow and the suction inlet at a distance one and one-half times the diameter of the suction pipe. The baffle will allow entrained air to escape from the liquid before it is drawn into the suction inlet.

If two suction lines are installed in a single sump, the flow paths may interact, reducing the efficiency of one or both pumps. To avoid this, position the suction inlets so that they are separated by a distance equal to at least three times the diameter of the suction pipe.

Suction Line Positioning

The depth of submergence of the suction line is critical to efficient pump operation. Figure 1 shows recommended minimum submergence vs. velocity.

NOTE

The pipe submergence required may be reduced by installing a standard pipe increaser fitting at the end of the suction line. The larger opening size will reduce the inlet velocity. Calculate the required submergence using the following formula based on the increased opening size (area or diameter).

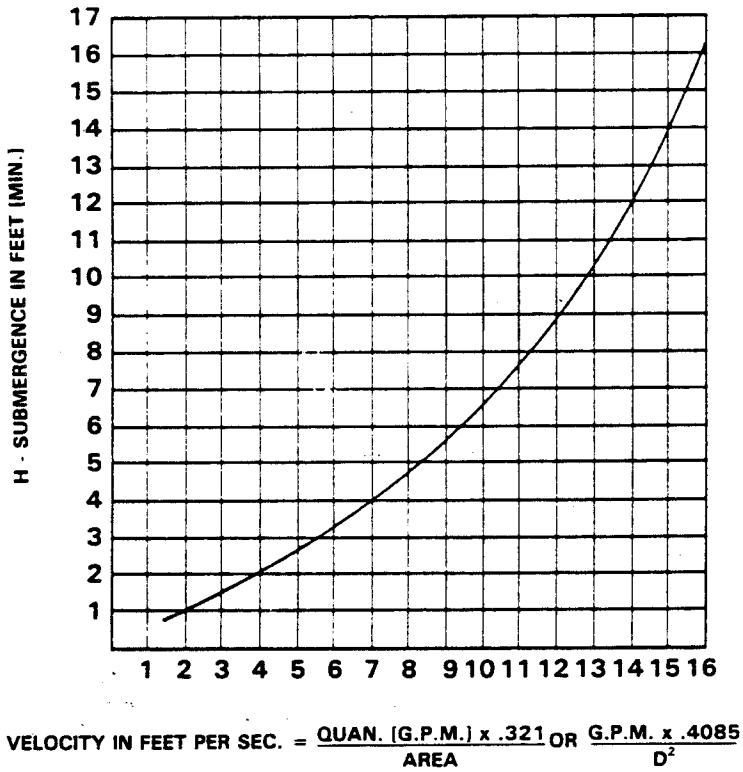

Figure 1. Recommended Minimum Suction Line Submergence Vs. Velocity

DISCHARGE LINES

Siphoning

Do not terminate the discharge line at a level lower than that of the liquid being pumped unless a siphon breaker is used in the line. Otherwise, a siphoning action causing damage to the pump could result.

Valves

If a throttling valve is desired in the discharge line, use a valve as large as the largest pipe to minimize friction losses. Never install a throttling valve in a suction line.

With high discharge heads, it is recommended that a throttling valve and a check valve be installed in the discharge line to protect the pump from excessive shock pressure and reverse rotation when it is stopped.

ALIGNMENT

The alignment of the pump and the engine is critical for trouble free mechanical operation. See Section E, **Securing Pump To Engine** for detailed information.

OPERATION - SECTION C

WARNING

This pump is designed to pump clear water. Do not attempt to pump volatile, corrosive, or flammable liquids which may damage the pump or endanger personnel as a result of pump failure.

WARNING

Never tamper with the governor to gain more power. The governor establishes safe operating limits that should not be exceeded. The maximum continuous operating speed is 1800 RPM.

PRIMING

Install the pump and piping as described in INSTALLATION. Make sure that the piping connections are tight, and that the pump is securely mounted. Check that the pump is properly lubricated (see LUBRICATION in MAINTENANCE AND REPAIR).

Since this is not a self-priming pump, it will require an external priming device when installed in a **static lift application**. Many standard centrifugal models are equipped with a hand operated vacuum pump, exhaust primer, or ejector for this purpose. If a priming device was not furnished with the pump, it may be ordered from the factory as an option.

Before attempting to operate the priming device, close the discharge throttling valve. (Installation of a spring-loaded check valve is also recommended to facilitate priming.) Once the pump is fully primed, close the valve between the priming device and pump to preserve the prime. Start the pump, if not already in operation, and open the discharge valve slowly and fill the discharge line.

When installed in a **flooded suction application**, simply open the system valves and permit the incoming liquid to evacuate the air. After the pump and piping system have completely filled, evacuate any remaining air pockets in the pump or suction line by loosening pipe plugs or opening bleeder valves.

CAUTION

Never operate this pump unless there is liquid in the pump casing. The pump will not prime when dry. Extended operation of a dry pump will destroy the seal assembly.

Hand-Operated Priming Pump

The hand-operated priming pump (see Figure 1) is designed to draw air out of the suction line and the pump casing.

The hand-operated priming pump can be used while the pump is either stopped or operating.

Close the discharge line throttling valve and spring-loaded check valve (if so equipped) before engaging the priming device.

To prime the pump, open the cock in the bottom of the priming pump. Operate the handle of the pump until all of the air is expelled from the line and a small amount of liquid flows from the drain cock.

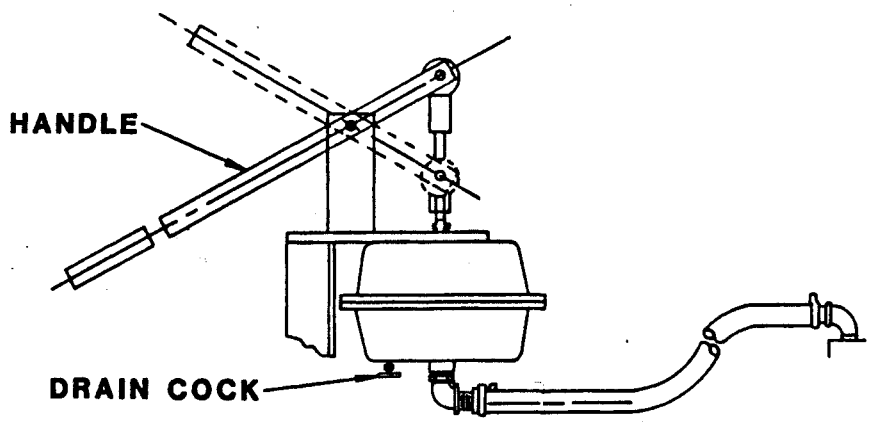

Figure 1. Hand Primer Assembly

Once the pump is fully primed, close the cock, open the discharge line throttling valve and start the pump.

STARTING

Consult the operations manual furnished with the engine.

OPERATION

Leakage

No leakage should be visible at pump mating surfaces, or at pump connections or fittings. Keep all line connections and fittings tight to maintain maximum pump efficiency.

Liquid Temperature And Overheating

The **maximum** liquid temperature for this pump is 160°F. Do not apply it at a higher operating temperature.

Overheating can occur if operated with the valves in the suction or discharge lines closed. Operating against closed valves could bring the liquid to a boil, build pressure, and cause the pump to rupture or explode. If overheating occurs, stop the pump and allow it to cool before servicing it. Refill the pump casing with cool liquid.

WARNING

Do not remove plates, covers, gauges, pipe plugs, or fittings from an overheated pump. Vapor pressure within the pump can cause parts being disengaged to be ejected with great force. Allow the pump to cool before servicing.

Strainer Check

If a suction strainer has been shipped with the pump or installed by the user, check the strainer regularly, and clean it as necessary. The strainer should also be checked if pump flow rate begins to drop. If a vacuum suction gauge has been installed, monitor and record the readings regularly to detect strainer blockage.

Pump Vacuum Check

Since this pump does not have a suction check valve, the discharge line must be fitted with a check valve if a pump vacuum reading is to be taken.

With the pump inoperative, install a vacuum gauge in the system, using pipe dope on the threads. Block the suction line and start the pump. At operating speed the pump should pull a vacuum of 20 inches or more of mercury. If it does not, check for air leaks in the seal, gasket, or discharge valve.

Open the suction line, and read the vacuum gauge with the pump primed and at operation speed. Shut off the pump. The vacuum gauge reading will immediately drop proportionate to static suction lift, and should then stabilize. If the vacuum reading falls off rapidly after stabilization, an air leak exists. Before checking for the source of the leak, check the point of installation of the vacuum gauge.

STOPPING

Never halt the flow of liquid suddenly. If the liquid being pumped is stopped abruptly, damaging shock waves can be transmitted to the pump and piping system. Close all connecting valves slowly. If the pump is driven by an engine, reduce the throttle speed slowly and allow the engine to idle briefly before stopping.

CAUTION

> If application involves a high discharge head, gradually close the discharge throttling valve before stopping the pump.

After stopping the pump, remove the engine ignition key or take other action to ensure that the pump will remain inoperative.

Cold Weather Preservation

In below freezing conditions, drain the pump to prevent damage from freezing. Also, clean out any solids by flushing with a hose. Operate the pump for approximately one minute; this will remove any remaining liquid that could freeze the pump rotating parts.

If the pump will be idle for more than a few hours, or if it has been pumping liquids containing a large amount of solids, drain the pump, and flush it thoroughly with clean water. To prevent large solids from clogging the drain port and preventing the pump from completely draining, insert a rod or stiff wire in the drain port, and agitate the liquid during the draining process. Clean out any remaining solids by flushing with a hose.

BEARING TEMPERATURE CHECK

Bearings normally run at higher than ambient temperatures because of heat generated by friction. Temperatures up to 160°F are considered normal for bearings, and they can operate safely to at least 180°F.

Checking bearing temperatures by hand is inaccurate. Bearing temperatures can be measured accurately by placing a contact-type thermometer against the housing. Record this temperature for future reference.

A sudden increase in bearing temperatures is a warning that the bearings are at the point of failing to operate properly. Make certain that the bearing lubricant is of the proper viscosity and at the correct level (see LUBRICATION in MAINTENANCE AND REPAIR). Bearing overheating can also be caused by shaft misalignment and/or excessive vibration.

When pumps are first started, the bearings may seem to run at temperatures above normal. Continued operation should bring the temperatures down to normal levels.

PUMP TROUBLESHOOTING - SECTION D

WARNING

Before attempting to open or service the pump:

1. Familiarize yourself with this manual.
2. Switch off the engine ignition key and remove the key to ensure that the pump will remain inoperative.
3. Allow the pump to cool if overheated.
4. Vent the pump slowly and cautiously.
5. Close the suction and discharge valves.
6. Check the temperature before opening any covers, plates, or plugs.
7. Drain the pump.

TROUBLE	POSSIBLE CAUSE	PROBABLE REMEDY
PUMP FAILS TO PRIME	Air leak in suction line.	Correct leak.
	Lining of suction hose collapsed.	Replace suction hose.
	Leaking or worn seal or pump gasket.	Check pump vacuum. Replace leaking or worn seal or gasket.
	Suction check valve or foot valve clogged or binding.	Clean valve.
	Suction lift or discharge head too high.	Check piping installation and install bypass line if needed. See INSTALLATION.
	Strainer clogged.	Check strainer and clean if necessary.
PUMP STOPS OR FAILS TO DELIVER RATED FLOW OR PRESSURE	Air leak in suction line.	Correct leak.
	Suction intake not submerged at proper level or sump too small.	Check installation and correct as needed.Check submergence chart (Section B).
	Lining of suction hose collapsed.	Replace suction hose.
	Impeller or other wearing parts worn or damaged.	Replace worn or damaged parts. Check that impeller is properly centered and rotates freely.

TROUBLE	POSSIBLE CAUSE	PROBABLE REMEDY
PUMP STOPS OR FAILS TO DELIVER RATED FLOW OR PRESSURE(cont.)	Impeller clogged.	Free impeller of debris.
	Pump speed too slow.	Check engine output; consult engine operation manual.
	Discharge head too high.	Install bypass line.
	Suction lift too high.	Measure lift w/vacuum gauge. Reduce lift and/or friction losses in suction line.
	Leaking or worn seal or pump gasket.	Check pump vacuum. Replace leaking or worn seal or gasket.
	Strainer clogged.	Check strainer and clean if necessary.
PUMP REQUIRES TOO MUCH POWER	Pump speed too high.	Check engine output.
	Discharge head too low.	Adjust discharge valve.
	Liquid solution too thick.	Dilute if possible.
PUMP CLOGS FREQUENTLY	Discharge flow too slow.	Open discharge valve fully to increase flow rate, and run engine at maximum governed speed.
	Suction check valve or foot valve clogged or binding.	Clean valve.
EXCESSIVE NOISE	Cavitation in pump.	Reduce suction lift and/or friction losses in suction line. Record vacuum and pressure gauge readings and consult local representative or factory.
	Pumping entrained air.	Locate and eliminate source of air bubble.
	Pump or drive not securely mounted.	Secure mounting hardware.
	Impeller clogged or damaged.	Clean out debris; replace damaged parts.

TROUBLE	POSSIBLE CAUSE	PROBABLE REMEDY
BEARINGS RUN TOO HOT	Bearing temperature is high, but within limits.	Check bearing temperature regularly to monitor any increase.
	Low or incorrect lubricant.	Check for proper type and level of lubricant.
	Suction and discharge lines not properly supported.	Check piping installation for proper support.
	Drive misaligned.	Align drive properly.

PUMP MAINTENANCE AND REPAIR - SECTION E

MAINTENANCE AND REPAIR OF THE WEARING PARTS OF THE PUMP WILL MAINTAIN PEAK OPERATING PERFORMANCE.

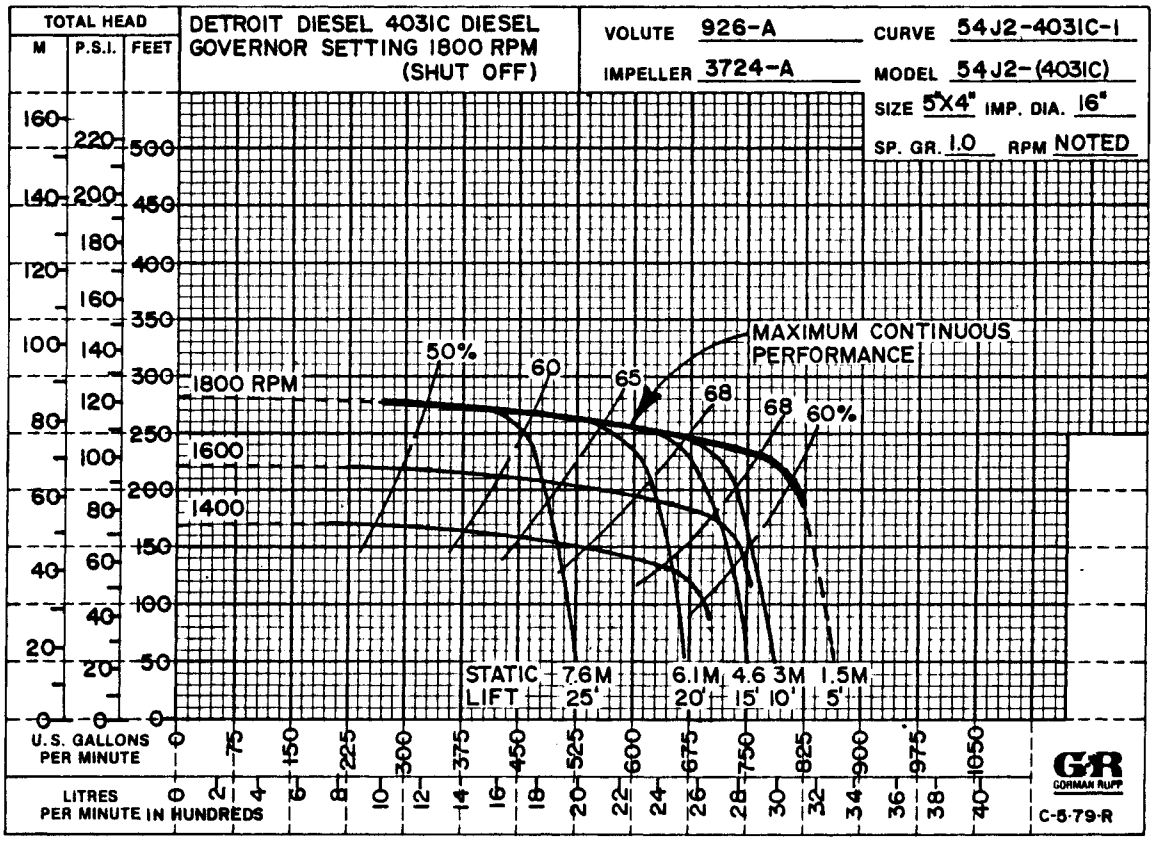

*STANDARD PERFORMANCE FOR PUMP MODEL 54J20-(4031C)

*Based on 70°F clear water at sea level with minimum suction lift. Since pump installations are seldom identical, your performance may be different due to such factors as viscosity, specific gravity, elevation, temperature, and impeller trim.

If your pump serial number is followed by an "N", your pump is **NOT** a standard production model. Contact the Gorman-Rupp Company to verify performance or part numbers.

CAUTION

> Pump speed and operating condition points must be within the continuous performance range shown on the curve.

SECTIONAL DRAWING

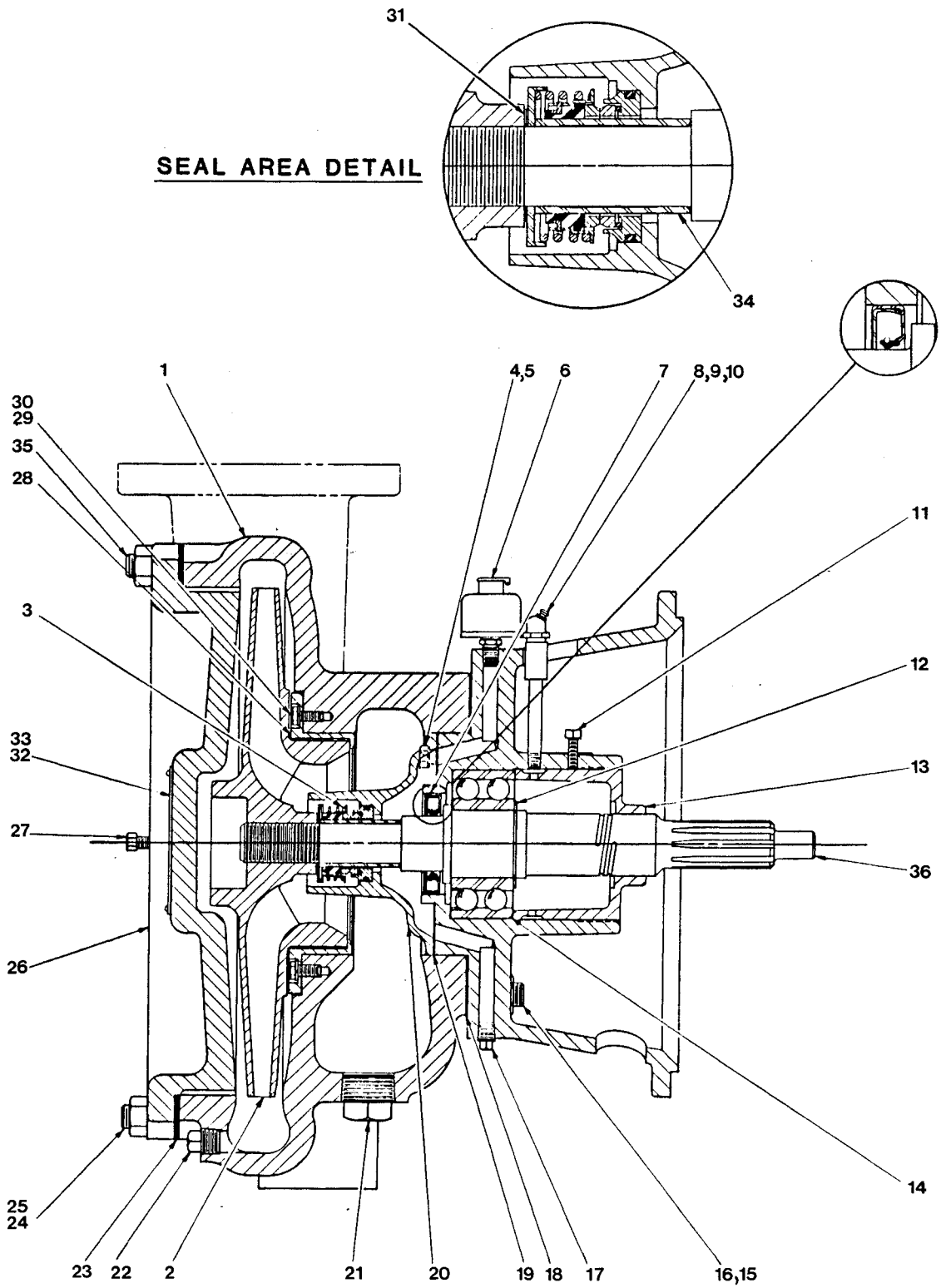

Figure 1. Pump End Assembly 54J20-(4031C)

PARTS LIST
Pump End Assembly 54J20-(4031C)
(From S/N 767201 up)

ITEM NO.		PART NAME	PART NUMBER	MATL CODE	QTY
1		PUMP CASING	926-A	10020	1
2	*	IMPELLER	3724-A	10010	1
3	*	SEAL ASSY	12364-E	-----	1
4		HEX HD CAPSCREW	B00603	14990	6
5		LOCKWASHER	J00006	15991	6
6		BOTTLE OILER	46711-505	-----	1
7	*	OIL SEAL	S00079	-----	1
8		LUB FITTING	S00194	-----	1
9		PIPE COUPLING	AE00004	11990	1
10		PIPE NIPPLE	T00412	15070	1
11		SQUARE HD SETSCREW	G00604	15990	1
12		RETAINING RING	S00215	-----	1
13		RETAINING NUT	2196	10010	1
14		BALL BEARING	S01033	-----	1
15		STUD	C01209	15991	8
16		HEX NUT	D00012	15991	8
17		SEAL DRAIN PLUG	P00006	11990	1
18	*	PUMP CASING GSKT	922-G	18000	1
19	*	SEAL HOUSING GSKT	38683-431	18000	1
20		SEAL HOUSING	38333-611	10010	1
21		CASING DRAIN PLUG	P00020	11990	1
22		CASING DRAIN PLUG	P00008	11990	1
23	*	COVER PLATE GSKT	926-G	18000	1
24		STUD	C01210	15991	16
25		HEX NUT	D00012	15991	16
26		COVER PLATE	13021	10010	1
27		HEX HD CAPSCREW	B00604	15991	2
28	*	WEAR RING	6597	10010	1
29		HEX HD CAPSCREW	B00503	15991	4
30		LOCKWASHER	J00005	15991	4
31	*	IMPELLER ADJUSTING SHIM SET	37-J	17090	REF
32		NAME PLATE	2613-D	13990	1
33		DRIVE SCREW	BM#04-03	15990	4
34	*	SHAFT SLEEVE	31414-063	-----	1
35		STUD	C01211	15991	2
36	*	IMPELLER SHAFT	6819-E	16040	REF
NOT SHOWN:					
		PIPE PLUG	P00008	11990	2
		PIPE PLUG	P00016	11990	1
		STRAINER	46641-005	24151	1
		REDUCER PIPE BUSHING	AP09680	11990	1
		PRESSURE GAUGE	S00180	-----	1

*INDICATES PARTS RECOMMENDED FOR STOCK

Above Serial Numbers Do Not Apply To Pumps Made In Canada.

CANADIAN SERIAL NO. ..... AND UP

SECTIONAL DRAWING

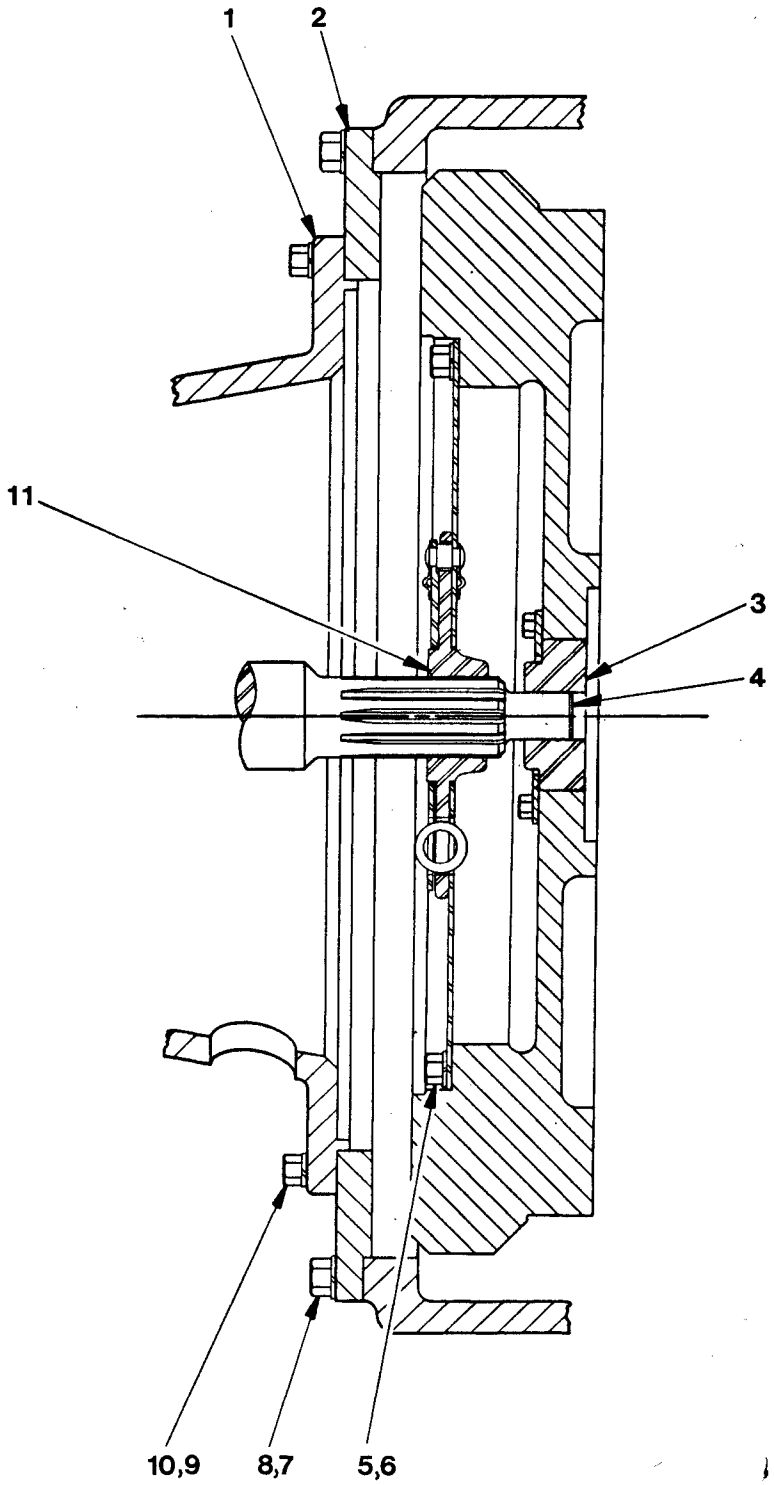

Figure 2. Drive Assembly For Model 54J20-(4031C)

PARTS LIST
Drive Assembly For Model 54J20-(4031C)

ITEM NO.		PART NAME	PART NUMBER	MATL CODE	QTY
1		INTERMEDIATE	2175-D	10010	1
2		ADAPTOR	3319	10010	1
3	*	PILOT BUSHING	2479	15010	1
4	*	IMPELLER SHAFT	6819-E	16040	1
5		HEX HD CAPSCREW	B00603	15991	8
6		LOCKWASHER	J00006	15991	8
7		HEX HD CAPSCREW	B00705	15991	12
8		LOCKWASHER	J00007	15991	12
9		HEX HD CAPSCREW	B00605	15991	12
10		LOCKWASHER	J00006	15991	12
11		DRIVE PLATE ASSEMBLY	24521-168	-----	1

*INDICATES PARTS RECOMMENDED FOR STOCK

PUMP AND SEAL DISASSEMBLY AND REASSEMBLY

This pump requires little service due to its rugged, minimum-maintenance design. However, if it becomes necessary to inspect or replace the wearing parts, follow these instructions which are keyed to the sectional views (see Figures 1, 2, and 3) and the accompanying parts lists.

Most service functions may be performed by draining the pump and removing the cover plate. If major repair is required, the piping and/or engine must be disconnected.

Before attempting to service the pump, take precautions to ensure that the engine will remain inoperative. Close all connecting valves in the suction and discharge lines.

For engine disassembly and repair, consult the literature supplied with the engine or contact your local engine representative.

WARNING

Before attempting to open or service the pump:

1. Familiarize yourself with this manual.
2. Switch off the engine ignition key and remove the key to ensure that the pump will remain inoperative.
3. Allow the pump to cool if overheated.
4. Vent the pump slowly and cautiously.
5. Close the suction and discharge valves.
6. Check the temperature before opening any covers, plates, or plugs.
7. Drain the pump.

Cover Plate Removal

(Figure 1)

The impeller, wear ring and seal assembly may be serviced by removing the cover plate (26).

Remove the casing drain plugs (21 and 22) and drain the pump. Clean and reinstall the drain plugs.

Remove the hardware (25) and use the jacking screws (27) to break the cover plate loose from the pump casing. Remove the cover plate and gasket (23).

Impeller Disassembly

(Figure 1)

The impeller bore is designed to accept a 2 inch square block of wood or a steel bar to aid in removal of the impeller. Use an impeller wrench if one is available. Turn the impeller counterclockwise (when facing the impeller end of shaft) to remove it from the impeller shaft. Use caution when removing the impeller; tension on the seal spring will be released as the impeller is removed.

Inspect the impeller and replace it if it is cracked or badly worn. Slide the impeller adjusting shims (31) from the shaft. To ease reassembly, tag and tie the shims.

Inspect the wear ring (28) for excessive wear or damage. If replacement is necessary, remove the hardware (29 and 30) and install 5/16 - 18 X 2 1/2 inch NC jacking screws in the threaded holes in the wear ring. Tighten the jacking screws evenly (to prevent binding) until the wear ring separates from the pump casing.

Seal Disassembly

(Figure 1)

Before removing the seal assembly, remove the seal cavity drain plug (17) to drain the seal lubricant. Clean and reinstall the drain plug.

Carefully remove the spring seat, spring, bellows and the rotating and stationary seal elements. Use a stiff wire with a hooked end if necessary. Remove the stationary seat and O-rings.

If no further disassembly is required, refer to **Seal Reassembly**.

Separating Pump From Engine

(Figure 2)

To service the impeller shaft, bearings, or drive plate assembly, the pump must be separated from the engine. To accomplish this, disconnect the suction and discharge piping and remove the hardware securing the pump assembly to the base.

Use a hoist and sling to support the pump assembly and remove the hardware (7 and 8) securing the intermediate (1) and adaptor (2) to the engine bellhousing. Separate the two assemblies by pulling the pump straight away from the engine.

As the assemblies are separated the impeller shaft (4) will disengage from the drive plate assembly (11).

It is not necessary to remove the drive plate assembly from the engine flywheel unless the pilot bushing (3) is worn and requires replacement. If replacement is necessary, disengage the hardware (5 and 6) and remove the drive plate assembly. Remove the hardware and plate (supplied with the engine) covering the pilot bushing and use a bearing puller to remove the pilot bushing.

Impeller Shaft And Bearing Disassembly

(Figure 1).

Properly lubricated bearings should provide long service life. Do not disassemble the intermediate unless there are indications of bearing failure, or unless damage to the intermediate or impeller shaft is suspected.

CAUTION

> Shaft and bearing disassembly in the field is not recommended. These operations should be performed only in a properly-equipped shop by qualified personnel.

After separating the pump end from the engine reach through the back of the intermediate and disengage the hex nuts (16). Separate the intermediate from the pump casing (1) and remove the gasket (18). To remove the seal housing (20) and gasket (19), disengage the hardware (4 and 5) from the intermediate.

Loosen the square head set screw (11) and unscrew the retaining nut (13) out of the intermediate.

NOTE

> There is no provision for draining the grease from the intermediate cavity. Place a drip pan under the intermediate before removing the retaining nut.

Place a block of wood against the impeller end of the shaft and drive the shaft and assembled bearing (14) out of the intermediate.

Remove the bearing retaining ring (12) and use a bearing puller to remove the bearing from the impeller shaft.

Press the oil seal (7) from the intermediate bore and inspect for wear or damage.

Impeller Shaft And Bearing Reassembly

(Figure 1)

Remove the grease fitting and hardware (8, 9, and 10) from the intermediate and flush the old bearing lubricant from the cavity. Clean the bore of the intermediate, impeller shaft, and all component parts (except the bearing) with a soft cloth soaked in cleaning solvent. Inspect the parts for wear, and replace as necessary.

WARNING

Most cleaning solvents are toxic and flammable. Use them only in a well-ventilated area free from excessive heat, sparks, and flame. Read and follow all precautions printed on solvent containers.

Inspect the shaft for distortion, for nicks and scratches on the oil seal seating surfaces, and for thread damage on the impeller end. Dress the threads, nicks and burrs on the shaft with a fine file or honing stone. Replace the impeller shaft if defective.

To prevent contamination, wash the bearing thoroughly in **fresh** cleaning solvent, agitating to remove all old lubricant. Dry the bearing with filtered compressed air and coat with a light oil.

Rotate the bearing by hand to check for rough or binding rotation, and inspect the bearing balls. If the bearing rotation is rough or the balls are discolored replace the bearing.

CAUTION

Bearings must be kept free of all dirt and foreign material. Failure to do so will greatly shorten bearing life. DO NOT spin dry bearings. This may scratch the balls or races and cause premature bearing failure.

Pre-pack the bearing with #0 grease by hand (or use a bearing packer if available) until the bearing balls are thoroughly lubricated.

The bearing is a tight press fit onto the impeller shaft and a snug push fit into the intermediate. If the shaft is worn so that the bearing slips on and off easily, the shaft must be replaced. The intermediate housing must be replaced if the bearing does not fit snugly.

Position the bearing so that the loading groove faces toward the impeller end of the shaft and press it on until squarely seated against the shaft shoulder. Secure the bearing with the retaining ring (12).

CAUTION

When installing the bearings onto the shaft, NEVER press or hit against the outer race, balls, or ball cage. Press ONLY on the inner race.

Install the oil seal (7) into the intermediate bore with the lip positioned as shown in Figure 1.

Push the shaft and assembled bearing into the intermediate bore until the outer race of the bearing seats squarely against the intermediate shoulder. **Be careful** not to damage the oil seal already installed.

CAUTION

> When installing the shaft and bearings into the bearing bore, push against the outer race. NEVER hit the balls or ball cage.

Reinstall the retaining nut (13) into the intermediate and secure it with the square head set screw (11).

NOTE

> Shaft endplay should be between .002 - .010 inch. Adjust the retaining nut to establish the correct endplay.

Replace the seal housing gasket (19). Be sure to align the lubrication ports in the intermediate with holes in the gasket. Secure the seal housing to the intermediate using the attaching hardware.

Replace the casing gasket (18) and reassemble the intermediate onto the pump casing using hex nuts (16).

Reinstall the pipe nipple, pipe coupling and lubrication fitting (8, 9, and 10) and lubricate the bearing cavity as indicated in **LUBRICATION**, Section E.

Securing Pump To Engine

(Figure 2)

Press the pilot bushing (3) into the engine flywheel and apply a coating of 'Never-Seez' lubricant to the inside diameter. Make certain the bushing does not protrude and preload the shaft and bearing.

CAUTION

> If the pilot bushing and drive plate are not properly positioned on the shaft, excessive wear and a preload condition could cause premature thrust bearing failure.

Install the retainer plate.

Secure the drive plate assembly to the flywheel as shown in Figure 2 with the previously removed hardware.

Slide the shaft splines into the drive plate and use the hardware (7 and 8) to secure the intermediate and adaptor to the engine bellhousing.

Be sure to reinstall any leveling shims used under the pump mounting feet before installing the base mounting hardware.

Seal Reassembly

(Figure 3)

Clean the seal cavity and shaft with a cloth soaked in fresh cleaning solvent.

WARNING

Most cleaning solvents are toxic and flammable. Use them only in a well-ventilated area free from excessive heat, sparks, and flame. Read and follow all precautions printed on solvent containers.

The seal is not normally reused because wear patterns on the finished faces cannot be realigned during reassembly. This could result in premature failure. If necessary to reuse an old seal in an emergency, **carefully** wash all metallic parts in fresh cleaning solvent and allow to dry thoroughly.

Handle seal parts with extreme care to prevent damage. Be careful not to contaminate precision finished faces; even fingerprints on the faces can shorten seal life. If necessary, clean the faces with a non-oil based solvent and a clean lint-free tissue. Wipe **lightly** in a concentric pattern to avoid scratching the faces.

Inspect the seal components for wear, scoring, grooves, and other damage that might cause leakage. Clean and polish the shaft sleeve or replace it if there are nicks or cuts on either end. If any components are worn, replace the complete seal; **never mix old and new seal parts**.

If a replacement seal is being used, remove it from the container and inspect the precision finished faces to ensure that they are free of any foreign matter. Assemble the seal as follows (see Figure 3).

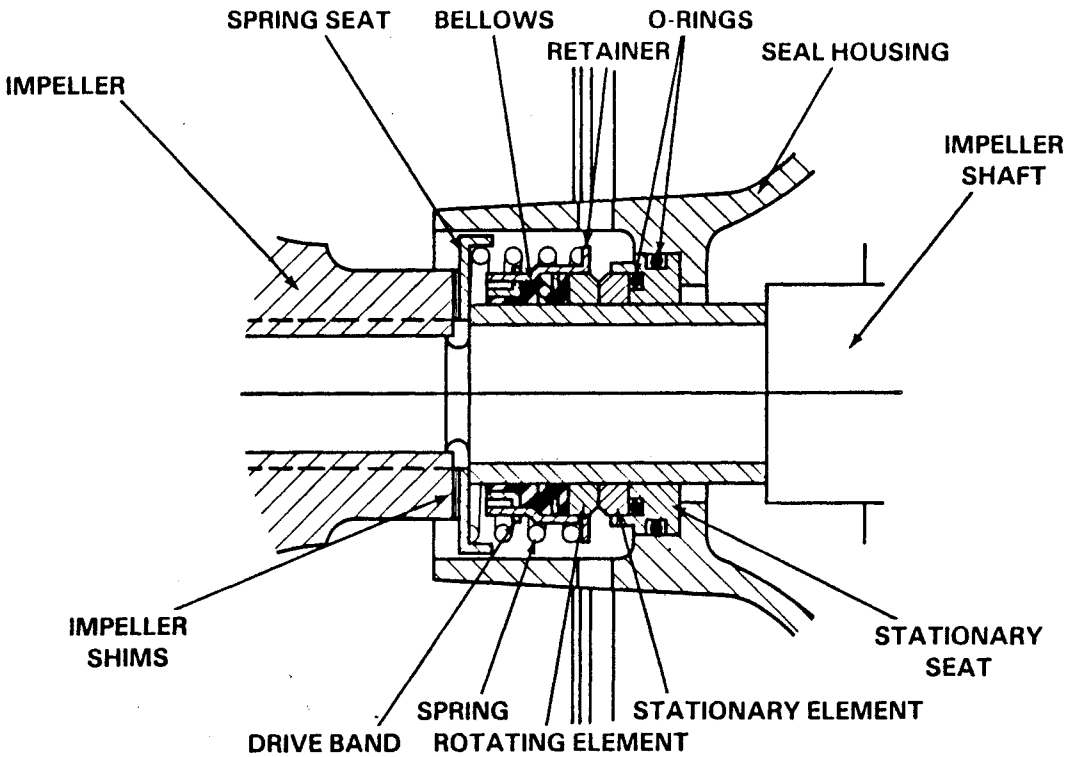

Figure 3. 12364-E Seal Assembly

CAUTION

This seal is not designed for operation at temperatures above 160°F. Do not use at higher operating temperatures.

Slide the shaft sleeve onto the impeller shaft with the chamfered end facing away from the impeller.

Lubricate the stationary seat O-rings with water or light oil and install them in the stationary seat. Subassemble the stationary element in the stationary seat. Press this assembly squarely into the seal housing bore. Be careful not to damage the seal face. A push tube cut from a length of plastic pipe would aid this installation. The I.D. of the tube should be approximately the same as the I.D. of the seal spring.

Lubricate the I.D. of the bellows assembly with water or light oil and place a drop of light oil on each of the precision seal faces, **never** use grease. Slide this assembly onto the shaft until the seal elements contact. Reinstall the spring and spring seat.

After the impeller has been installed see **LUBRICATION**, Section E for seal assembly lubricating.

Pump Reassembly

(Figure 1)

If the wear ring (28) was removed, remove the jacking screws from the wear ring, align the mounting holes, and press the wear ring into the pump casing. Apply "Never-Seez" lubricant (or equivalent) to the attaching hardware (29 and 30) and secure the wear ring to the pump casing.

Inspect the impeller and replace it if cracked or badly worn. For maximum pump efficiency, the vanes of the impeller must be centered within the casing scroll. If adjustment is necessary, add or subtract impeller shims. Slide the correct number of impeller shims on the impeller shaft and screw the impeller completely onto the shaft.

To verify the impeller positioning, measure the pump casing and impeller as shown in Figure 4. Use these measurements to calculate the required impeller location (dimension E). Add or remove impeller adjusting shims until dimension E is obtained.

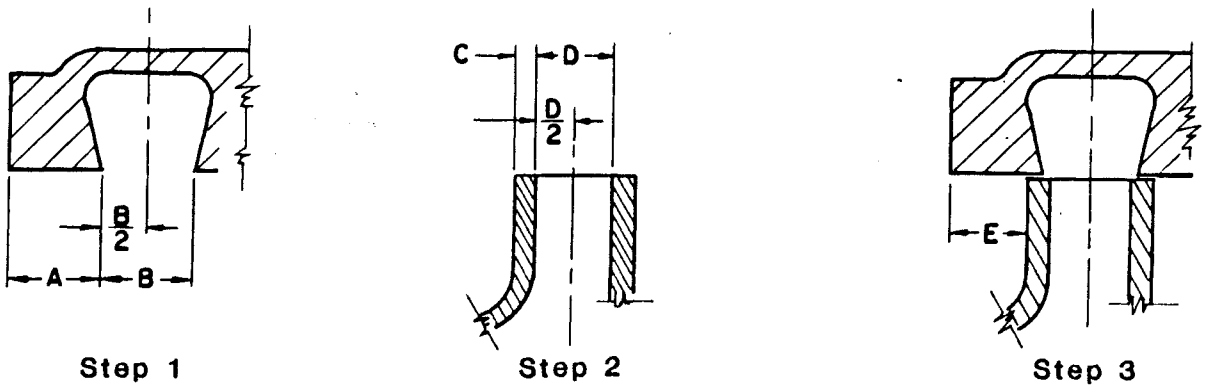

$$\left(A+\frac{B}{2}\right)-\left(C+\frac{D}{2}\right)=E$$

Figure 4. Centering Impeller Within Volute Scroll

NOTE

After the impeller has been properly positioned, check for free rotation. Correct any scraping binding before further reassembly.

Replace the cover plate gasket (23) and reassemble the cover plate to the pump casing. Make sure the jacking screws (27) do not interfere with the cover plate seating.

NOTE

Apply 'Loctite Thread Sealant' (G-R part number 18771-050) or equivalent to the studs before securing.

Turn the shaft by hand to make sure that the impeller is not binding or scraping.

Final Pump Reassembly

Be sure the pump end assembly is secure to the engine and base.

Install the suction and discharge lines and open all valves in the lines. Make certain that all piping connections are tight and properly supported.

Be sure the pump and engine have been properly lubricated, see **LUBRICATION**.

Before starting refer to **OPERATION**, Section C, and start the pump.

LUBRICATION

Seal Assembly

Before starting, fill the seal bottle oiler (6) with S.A.E. #30 non-detergent oil. Monitor the oil level periodically.

Bearings

The intermediate bearing cavity was fully lubricated when shipped from the factory. When additional lubrication is required, add one shot of No. 0 pressure gun grease to the grease fitting (8). **Do not over lubricate.** Excessive grease can cause overheating and reduce bearing life.

There are no provisions in the bearing cavity to drain or flush the lubricant. The pump must be disassembled to completely clean and maintain this cavity.

When lubricating a dry (overhauled) intermediate, fill the cavity through the grease fitting with 1/4 lb. of grease (approximately one-third full).

Under normal conditions, change the grease each 5000 hours of operation, or at 12 month intervals, which ever occurs first. In extremely dirty or humid conditions, change more frequently.

For cold weather operation, consult the factory or a lubricant supplier for the recommended grade of grease.

Engine

Consult the literature supplied with the engine, or contact your local engine representative.

For U.S. and International Warranty Information,
Please Visit www.grpumps.com/warranty
or call:
U.S.: 419—755—1280
International: +1—419—755—1352

For Canadian Warranty Information,
Please Visit www.grcanada.com/warranty
or call:
519—631—2870

THE GORMAN-RUPP COMPANY • MANSFIELD, OHIO
GORMAN-RUPP OF CANADA LIMITED • ST. THOMAS, ONTARIO, CANADA