A C E

OM-01313-0E01
MARCH 13, 1980
Rev. A

80 SERIES™

INSTALLATION, OPERATION, PARTS LIST, AND MAINTENANCE MANUAL

MODEL

84A3-F200

THE GORMAN-RUPP COMPANY • MANSFIELD, OHIO
GORMAN-RUPP OF CANADA LIMITED • ST. THOMAS, ONTARIO, CANADA
Printed in U.S.A.

TABLE OF CONTENTS

INTRODUCTION

This Installation, Operation, and Maintenance Manual is designed to help you achieve the best performance and longest life from your Gorman-Rupp pump.

This pump is an 80 series, semi-open impeller, self-priming centrifugal model with a suction check valve. The pump is designed for handling most nonvolatile, nonflammable liquids which contain specified entrained solids. The basic material of construction for all wetted parts is gray iron and steel.

If there are any questions regarding the pump or its application which are not covered in this manual or in other literature accompanying this unit, please contact your Gorman-Rupp distributor, or write:

The Gorman-Rupp Company P.O. Box 1217 Mansfield, Ohio 44901	or	Gorman-Rupp of Canada Limited 70 Burwell Road St. Thomas, Ontario N5P 3R7

For information or technical assistance on the engine, contact the engine manufacturer's local dealer or representative.

The following are used to alert maintenance personnel to procedures which require special attention, to those which could damage equipment, and to those which could be dangerous to personnel:

NOTE

Instructions to aid in installation, operation, and maintenance or which clarify a procedure.

CAUTION

Instructions which must be followed to avoid causing damage to the product or other equipment incidental to the installation. These instructions describe the requirements and the possible damage which could result from failure to follow the procedures.

WARNING

These instructions must be followed to avoid causing injury or death to personnel, and describe the procedure required and the injury which could result from failure to follow the procedure.

WARNINGS - SECTION A

THESE WARNINGS APPLY TO 80 SERIES ENGINE DRIVEN PUMPS. REFER TO THE MANUAL ACCOMPANYING THE ENGINE BEFORE ATTEMPTING TO BEGIN OPERATION.

WARNING

Before attempting to open or service the pump:

1. Familiarize yourself with this manual.
2. Disconnect the engine to ensure that the pump will remain inoperative.
3. Allow the pump to cool if overheated.
4. Vent the pump slowly and cautiously.
5. Close the suction and discharge valves.
6. Check the temperature before opening any covers, plates, or plugs.
7. Drain the pump.

WARNING

This pump is designed to pump most liquids which contain specified entrained solids. Do not attempt to pump corrosive, volatile or flammable liquids which may damage the pump or endanger personnel as a result of pump failure.

WARNING

After the pump has been installed, make certain that the pump and all piping or hose connections are secure before operation.

WARNING

Do not operate the pump against a closed discharge valve for long periods of time. This could bring the liquid to a boil, build pressure, and cause the pump to rupture or explode.

WARNING

Do not remove plates, covers, gauges, pipe plugs, or fittings from an overheated pump. Vapor pressure within the pump can cause parts being disengaged to be ejected with great force. Allow the pump to cool before servicing.

WARNING

Do not operate an internal combustion engine in an explosive atmosphere. When operating internal combustion engines in an enclosed area, make certain that exhaust fumes are piped to the outside. These fumes contain carbon monoxide, a deadly gas that is colorless, tasteless, and odorless.

WARNING

Never tamper with the governor to gain more power. The governor establishes safe operating limits that should not be exceeded. The maximum continuous operating speed is 2400 RPM.

WARNING

Fuel used by internal combustion engines presents an extreme explosion and fire hazard. Make certain that all fuel lines are securely connected and free of leaks. Never refuel a hot or running engine. Avoid overfilling the fuel tank. Always use the correct type of fuel.

WARNING

Use lifting and moving equipment in good repair and with adequate capacity to prevent injuries to personnel or damage to equipment. The bail is intended for use in lifting the pump assembly only; disconnect suction and discharge hoses and piping from the pump when lifting the pump by the bail.

INSTALLATION - SECTION B

Since pump installations are seldom identical, this section offers only general recommendations and practices required to inspect, position, and arrange the pump and piping.

Most of the information pertains to a standard **static lift application** where the pump is positioned above the free level of liquid to be pumped.

If installed in a **flooded suction application** where the liquid is supplied to the pump under pressure, some of the information such as mounting, line configuration, and priming must be tailored to the specific application. Since the pressure supplied to the pump is critical to performance and safety, **be sure** to limit the incoming pressure to 50% of the maximum pressure developed by the pump. (See Section E, Page 1.) If the pump is fitted with a Gorman-Rupp double grease lubricated seal, the maximum incoming pressure must be reduced to 10 p.s.i..

For further assistance, contact your Gorman-Rupp distributor or the Gorman-Rupp Company.

Pump Dimensions

See Figure 1 for the approximate physical dimensions of this pump.

OUTLINE DRAWING

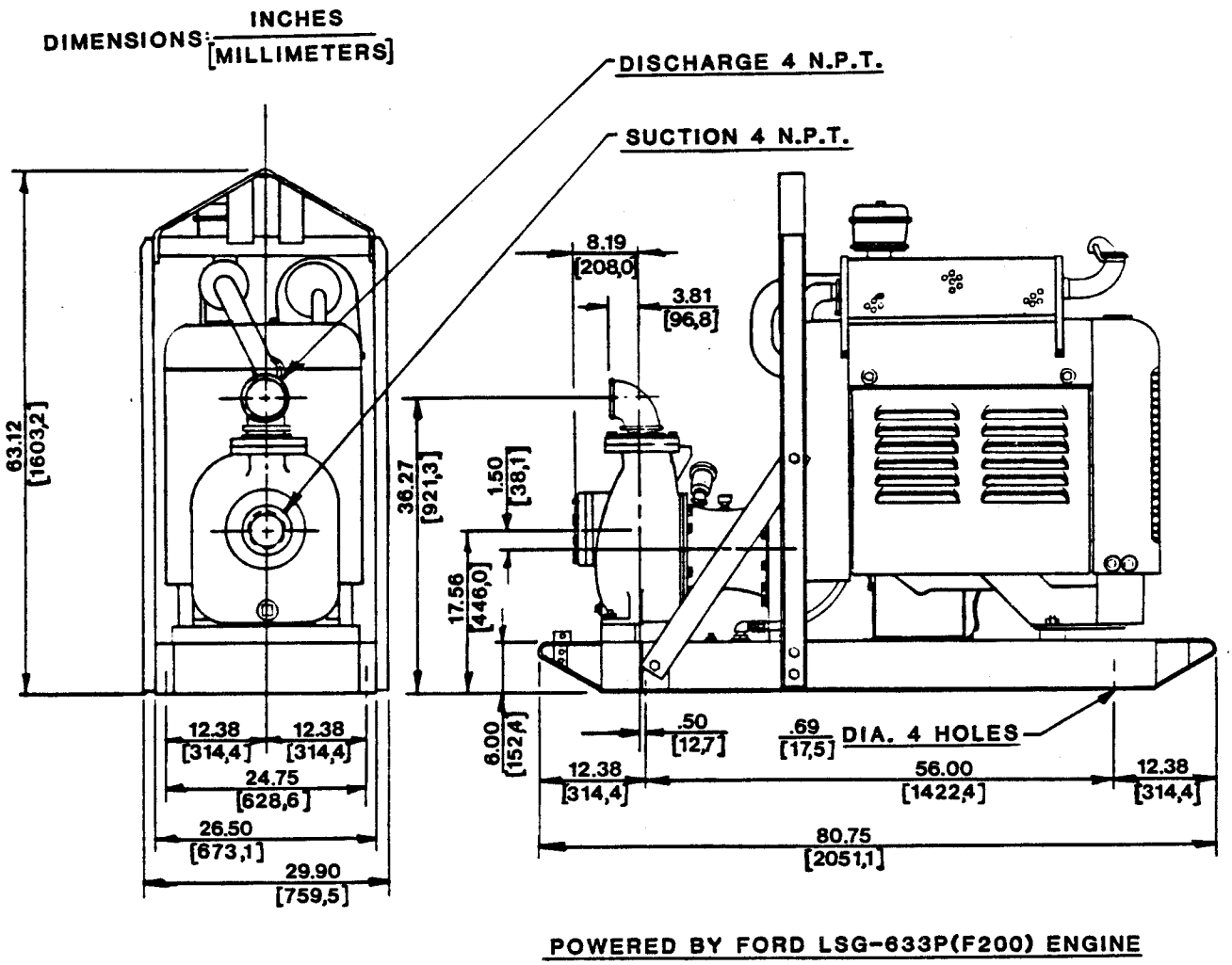

Figure 1. Pump Model 84A3-F200

PREINSTALLATION INSPECTION

The pump assembly was inspected and tested before shipment from the factory. Before installation, inspect the pump for damage which may have occurred during shipment. Check as follows:

a. Inspect the pump assembly for cracks, dents, damaged threads, and other obvious damage.

b. Check for and tighten loose bolts, nuts, capscrews, and other attaching hardware. Since gaskets tend to shrink after drying, check for and tighten loose nuts and capscrews securing mating surfaces.

c. Carefully read all tags, decals, and markings on the pump assembly, and follow the instructions indicated.

d. Check all lubricant levels and lubricate as necessary. Refer to LUBRICATION in the MAINTENANCE AND REPAIR section of this manual and perform duties as instructed.

e. If the pump and engine have been stored for more than 12 months, some of the components or lubricants may have exceeded their maximum shelf life. These **must be inspected or replaced** to ensure maximum pump service.

If the maximum shelf life has been exceeded, or if anything appears to be abnormal, contact your Gorman-Rupp distributor or the factory to determine the repair or updating policy. **Do not** put the pump into service until appropriate action has been taken.

POSITIONING PUMP

Lifting

Use lifting equipment with a capacity of a least **6,500 pounds**. This pump weighs approximately **1,275 pounds**, not including the weight of accessories and piping.

CAUTION

> The pump assembly can be seriously damaged if the cables or chains used to lift and move the unit are improperly wrapped around the pump.

Mounting

Locate the pump in an accessible place as close as practical to the liquid being pumped. Level mounting is essential for proper operation. The pump may have to be supported or shimmed to provide for level operation or to eliminate vibration.

If the pump has been mounted on a moveable base, make certain the base is stationary by setting the brake and blocking the wheels before attempting to operate the pump.

SUCTION AND DISCHARGE PIPING

Materials

Either pipe or hose may be used for suction and discharge lines. Piping materials must be compatible with the liquid being pumped. If hose is used in suction

lines, it must be the rigid-wall, reinforced type to prevent collapse under suction. Using piping couplings in suction lines is not recommended.

Line Configuration

Keep suction and discharge lines as straight as possible to minimize friction losses. Make minimum use of elbows and fittings, which substantially increase friction loss. If elbows are necessary, use the long-radius type to minimize friction loss.

Connections to Pump

Before tightening a connecting flange, align it exactly with the pump port. Never pull a pipe line into place by tightening the flange bolts and/or couplings.

Lines near the pump must be independently supported to avoid strain on the pump which could cause excessive vibration, decreased bearing life, and increased shaft and seal wear. If hose-type lines are used, they should have adequate support to secure them when filled with liquid and under pressure.

Gauges

Most pumps are drilled and tapped for installing discharge pressure and vacuum suction gauges. If these gauges are desired for pumps that are not tapped, drill and tap the suction and discharge lines close to the pump before installing the lines.

SUCTION LINES

To avoid air pockets which could affect pump priming, the suction line must be as short and direct as possible. When operation involves a suction lift, the line must always slope upward to the pump from the source of the liquid being pumped; if the line slopes down to the pump at any point along the suction run, air pockets will be created.

Fittings

Suction lines should be the same size as the pump inlet. If reducers are used in suction lines, they should be the eccentric type, and should be installed with the flat part of the reducers uppermost to avoid creating air pockets. Valves are not normally used in suction lines, but if a valve is used, install it with the stem horizontal to avoid air pockets.

Strainers

If a strainer is furnished with the pump, be certain to use it; any spherical solids which pass through a strainer furnished with the pump will also pass through the pump itself.

If a strainer is not furnished with the pump, but is installed by the pump user, make certain that the total area of the openings in the strainer is at least three or four times the cross section of the suction line, and that the openings will not permit passage of solids larger than the solids handling capability of the pump.

This pump is designed to handle up to 1.25 inch diameter spherical solids.

Sealing

Since even a slight leak will affect priming, head, and capacity, especially when operating with a high suction lift, all connections in the suction line should be sealed with pipe dope to ensure an airtight seal. Follow the sealant manufacturer's recommendations when selecting and applying the pipe dope. The pipe dope should be compatible with the liquid being pumped.

Suction Lines In Sumps

If a single suction line is installed in a sump, it should be positioned away from the wall of the sump at a distance equal to one and one-half times the diameter of the suction line.

If there is a liquid flow from an open pipe into the sump, the flow should be kept away from the suction inlet because the inflow will carry air down into the sump, and air entering the suction line will reduce pump efficiency.

If it is necessary to position inflow close to the suction inlet, install a baffle between the inflow and the suction inlet at a distance one and one-half times the diameter of the suction pipe. The baffle will allow entrained air to escape from the liquid before it is drawn into the suction inlet.

If two suction lines are installed in a single sump, the flow paths may interact, reducing the efficiency of one or both pumps. To avoid this, position the suction inlets so that they are separated by a distance equal to at least three times the diameter of the suction pipe.

Suction Line Positioning

The depth of submergence of the suction line is critical to efficient pump operation. Figure 2 shows recommended minimum submergence vs. velocity.

NOTE

The pipe submergence required may be reduced by installing a standard pipe increaser fitting at the end of the suction line. The larger opening size will reduce the inlet velocity. Calculate the required submergence using the following formula based on the increased opening size (area or diameter).

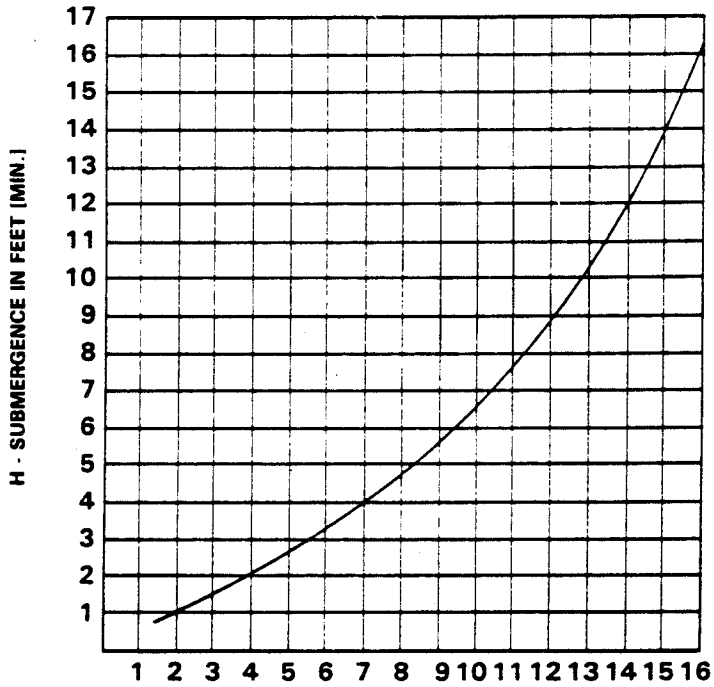

$$\text{VELOCITY IN FEET PER SEC.} = \frac{\text{QUAN. [G.P.M.]} \times .321}{\text{AREA}} \text{ OR } \frac{\text{G.P.M.} \times .4085}{D^2}$$

Figure 2. Recommended Minimum Suction Line Submergence Vs. Velocity

DISCHARGE LINES

Siphoning

Do not terminate the discharge line at a level lower than that of the liquid being pumped unless a siphon breaker is used in the line. Otherwise, a siphoning action causing damage to the pump could result.

Valves

If a throttling valve is desired in the discharge line, use a valve as large as the largest pipe in the line to minimize friction losses. Never install a throttling valve in a suction line.

A check valve in the discharge line is normally recommended, but is not necessary in low discharge head applications.

With high discharge heads, it is recommended that a throttling valve and a check valve be installed in the discharge line to protect the pump from excessive shock pressure and reverse rotation when it is stopped.

CAUTION

> If application involves a high discharge head, gradually close the discharge throttling valve before stopping the pump.

Bypass Lines

If it is necessary to permit the escape of air to atmosphere during initial priming or in the repriming cycle, install a bypass line between the pump and the discharge check valve. The bypass line should be sized so that it does not affect pump discharge capacity.

Either a Gorman-Rupp automatic air release valve - which will automatically open to allow the pump to prime, and automatically close when priming is accomplished - or a hand-operated shutoff valve should be installed in the bypass line.

NOTE

> The bypass line may clog frequently, particularly if the valve remains closed. If this condition occurs, either use a larger bypass line or leave the shutoff valve open during the pumping operation.

Do not terminate the discharge line at a level lower than that of the liquid being pumped unless a siphon breaker is used in the line. Otherwise, a siphoning action could result, causing damage to the pump.

ALIGNMENT

The alignment of the pump and the engine is critical for trouble free mechanical operation. See Section E, **Securing Intermediate and Drive Assembly To Engine** for detailed information.

OPERATION - SECTION C

WARNING

This pump is designed to pump most liquids which contain specified entrained solids. Do not attempt to pump corrosive, volatile or flammable liquids which may damage the pump or endanger personnel as a result of pump failure.

WARNING

Never tamper with the governor to gain more power. The governor establishes safe operating limits that should not be exceeded. The maximum continuous operating speed is 2400 RPM.

PRIMING

Install the pump and piping as described in INSTALLATION. Make sure that the piping connections are tight, and that the pump is securely mounted. Check that the pump is properly lubricated (see LUBRICATION in MAINTENANCE AND REPAIR).

This pump is self-priming, but the pump should never be operated unless there is liquid in the casing.

CAUTION

Never operate a self-priming pump unless there is liquid in the casing. The pump will not prime when dry. Extended operation of a dry pump will destroy the seal assembly.

Add liquid to the pump casing when:

1. The pump is being put into service for the first time.
2. The pump has not been used for a considerable length of time.
3. The liquid in the pump casing has evaporated.

Once the pump casing has been filled, the pump will prime and reprime as necessary.

WARNING

After filling the pump casing, do not attempt to operate the pump unless all connecting piping is securely installed. Otherwise, liquid in the pump forced out under pressure could cause injury to personnel.

To fill the pump, remove the pump casing fill cover or fill plug at the top of the casing and add clean liquid until the pump is filled. Replace the fill cover or fill plug before operating the pump.

STARTING

Consult the operations manual furnished with the engine.

OPERATION

CAUTION

Pump speed and operating condition points must be within the continuous performance range shown on the curve.

Lines With a Bypass

Either a Gorman-Rupp automatic air release valve or a hand operated shutoff valve may be installed in a bypass line.

If a Gorman-Rupp automatic air release valve has been installed, close the throttling valve in the discharge line. The Gorman-Rupp valve will automatically open to allow the pump to prime, and automatically close when priming has been accomplished. After the pump has been primed, and liquid is flowing steadily from the bypass line, open the discharge throttling valve.

If a hand operated shutoff valve has been installed, close the throttling valve in the discharge line, and open the bypass shutoff valve so that the pump will not have to prime against the weight of the liquid in the discharge line. When the pump has been primed, and liquid is flowing steadily from the bypass line, close the bypass shutoff valve and open the discharge throttling valve.

Lines Without a Bypass

Open all valves in the discharge line and start the power source. Priming is indicated by a positive reading on the discharge pressure gauge or by a quieter operation. The pump may not prime immediately because the suction line must first fill with liquid. If the pump fails to prime within five minutes, stop it and check the suction line for leaks.

After the pump has been primed, partially close the discharge line throttling valve in order to fill the line slowly and guard against excessive shock pressure which could damage pipe ends, gaskets, sprinkler heads, and any other fixtures connected to the line. When the discharge line is completely filled, adjust the throttling valve to the required flow rate.

Leakage

No leakage should be visible at pump mating surfaces, or at pump connections or fittings. Keep all line connections and fittings tight to maintain maximum pump efficiency.

Liquid Temperature And Overheating

The **maximum** liquid temperature for this pump is 160°F. Do not apply it at a higher operating temperature.

Overheating can occur if the valves in the suction or discharge lines are closed. Operating against closed valves could bring the liquid to a boil, build pressure, and cause the pump to rupture or explode. If overheating occurs, stop the pump and allow it to cool before servicing it. Refill the pump casing with cool liquid.

WARNING

Do not remove plates, covers, gauges, pipe plugs, or fittings from an overheated pump. Vapor pressure within the pump can cause parts being disengaged to be ejected with great force. Allow the pump to cool before servicing.

Strainer Check

If a suction strainer has been shipped with the pump or installed by the user, check the strainer regularly, and clean it as necessary. The strainer should also be checked if pump flow rate begins to drop.

Pump Vacuum Check

With the pump inoperative, install a vacuum gauge in the system, using pipe dope on the threads. Block the suction line and start the pump. At operating speed the pump should pull a vacuum of 20 inches or more of mercury. If it does not, check for air leaks in the seal, gasket, or discharge valve.

Open the suction line, and read the vacuum gauge with the pump primed and at operation speed. Shut off the pump. The vacuum gauge reading will immediately drop proportionate to static suction lift, and should then stabilize. If the vacuum reading falls off rapidly after stabilization, an air leak exists. Before checking for the source of the leak, check the point of installation of the vacuum gauge.

STOPPING

Never halt the flow of liquid suddenly. If the liquid being pumped is stopped abruptly, damaging shock waves can be transmitted to the pump and piping system. Close all connecting valves slowly. If the pump is driven by an engine, reduce the throttle speed slowly and allow the engine to idle briefly before stopping.

CAUTION

> If application involves a high discharge head, gradually close the discharge throttling valve before stopping the pump.

After stopping the pump, remove the engine ignition key to ensure that the pump will remain inoperative.

Cold Weather Preservation

In below freezing conditions, drain the pump to prevent damage from freezing. Also, clean out any solids by flushing with a hose. Operate the pump for approximately one minute; this will remove any remaining liquid that could freeze the pump rotating parts.

If the pump will be idle for more than a few hours, or if it has been pumping liquids containing a large amount of solids, drain the pump, and flush it thoroughly with clean water. To prevent large solids from clogging the drain port and preventing the pump from completely draining, insert a rod or stiff wire in the drain port, and agitate the liquid during the draining process. Clean out any remaining solids by flushing with a hose.

BEARING TEMPERATURE CHECK

Bearings normally run at higher than ambient temperatures because of heat generated by friction. Temperatures up to 160°F are considered normal for bearings, and they can operate safely to at least 180°F.

Checking bearing temperatures by hand is inaccurate. Bearing temperatures can be measured accurately by placing a contact-type thermometer against the housing. Record this temperature for future reference.

A sudden increase in bearing temperatures is a warning that the bearings are at the point of failing to operate properly. Make certain that the bearing lubricant is of the proper viscosity and at the correct level (see LUBRICATION in MAINTENANCE AND REPAIR). Bearing overheating can also be caused by shaft misalignment and/or excessive vibration.

When pumps are first started, the bearings may seem to run at temperatures above normal. Continued operation should bring the temperatures down to normal levels.

TROUBLESHOOTING - SECTION D

WARNING

Before attempting to open or service the pump:

1. Familiarize yourself with this manual.
2. Disconnect the engine to ensure that the pump will remain inoperative.
3. Allow the pump to cool if overheated.
4. Vent the pump slowly and cautiously.
5. Close the suction and discharge valves.
6. Check the temperature before opening any covers, plates, or plugs.
7. Drain the pump.

TROUBLE	POSSIBLE CAUSE	PROBABLE REMEDY
PUMP FAILS TO PRIME	Air leak in suction line.	Correct leak.
	Lining of suction hose collapsed.	Replace suction hose.
	Suction check valve or foot valve clogged or binding.	Clean valve.
	Leaking or worn seal or pump gasket.	Check pump vacuum. Replace leaking or worn seal or gasket.
	Discharge head too high.	Install bypass line.
	Strainer clogged.	Check strainer and clean if necessary.
	Suction lift too high.	Reduce suction lift.
PUMP STOPS OR FAILS TO DELIVER RATED FLOW OR PRESSURE	Air leak in suction line.	Correct leak.
	Suction intake not submerged at proper level or sump too small.	Check installation and correct as needed.Check submergence chart (Section B).
	Lining of suction hose collapsed.	Replace suction hose.
	Impeller or other wearing parts worn or damaged.	Replace worn or damaged parts. Check that impeller is properly centered and rotates freely.

TROUBLE	POSSIBLE CAUSE	PROBABLE REMEDY
PUMP STOPS OR FAILS TO DELIVER RATED FLOW OR PRESSURE(cont.)	Impeller clogged.	Free impeller of debris.
	Pump speed too slow.	Check engine output; consult engine operation manual.
	Discharge head too high.	Install bypass line.
	Suction lift too high.	Reduce suction lift.
PUMP REQUIRES TOO MUCH POWER	Pump speed too high.	Check engine output.
	Discharge head too low.	Adjust discharge valve.
	Liquid solution too thick.	Dilute if possible.
PUMP CLOGS FREQUENTLY	Discharge flow too slow.	Open discharge valve fully to increase flow rate, and run engine at maximum governed speed.
	Suction check valve or foot valve clogged or binding.	Clean valve.
	Liquid being pumped too thick.	Dilute liquid.
EXCESSIVE NOISE	Cavitation in pump.	Reduce suction lift and/or friction losses in suction line.
	Pumping entrained air.	Locate and eliminate source of air bubble.
	Pump or drive not securely mounted.	Secure mounting hardware.
	Impeller clogged or damaged.	Clean out debris; replace damaged parts.
BEARINGS RUN TOO HOT	Bearing temperature is high, but within limits.	Check bearing temperature regularly to monitor any increase.
	Low or incorrect lubricant.	Check for proper type and level of lubricant.
	Suction and discharge lines not properly supported.	Check piping installation for proper support.
	Drive misaligned.	Align drive properly.

MAINTENANCE AND REPAIR - SECTION E

MAINTENANCE AND REPAIR OF THE WEARING PARTS OF THE PUMP WILL MAINTAIN PEAK OPERATING PERFORMANCE.

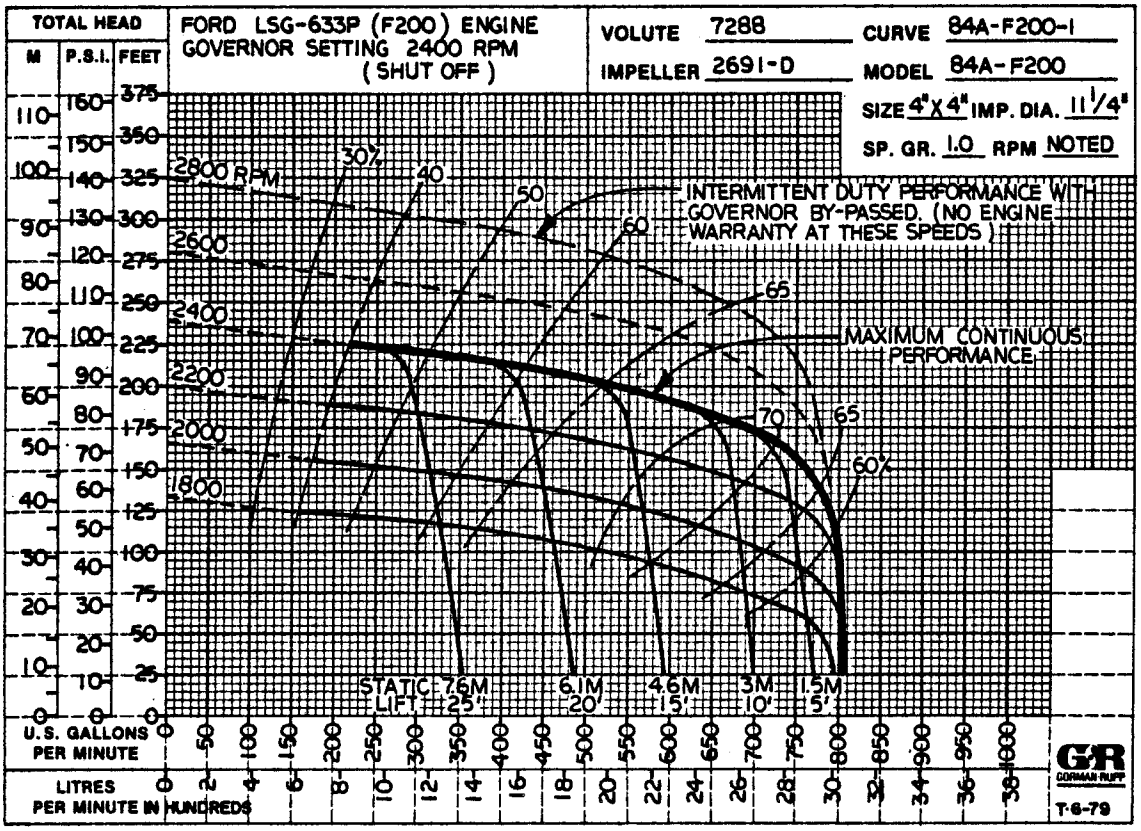

*STANDARD PERFORMANCE FOR PUMP MODEL 84A3-F200

*Based on 70°F clear water at sea level with minimum suction lift. Since pump installations are seldom identical, your performance may be different due to such factors as viscosity, specific gravity, elevation, temperature, and impeller trim.

If your pump serial number is followed by an "N", your pump is NOT a standard production model. Contact the Gorman-Rupp Company to verify performance or part numbers.

CAUTION

> Pump speed and operating condition points must be within the continuous performance range shown on the curve.

SECTIONAL DRAWING

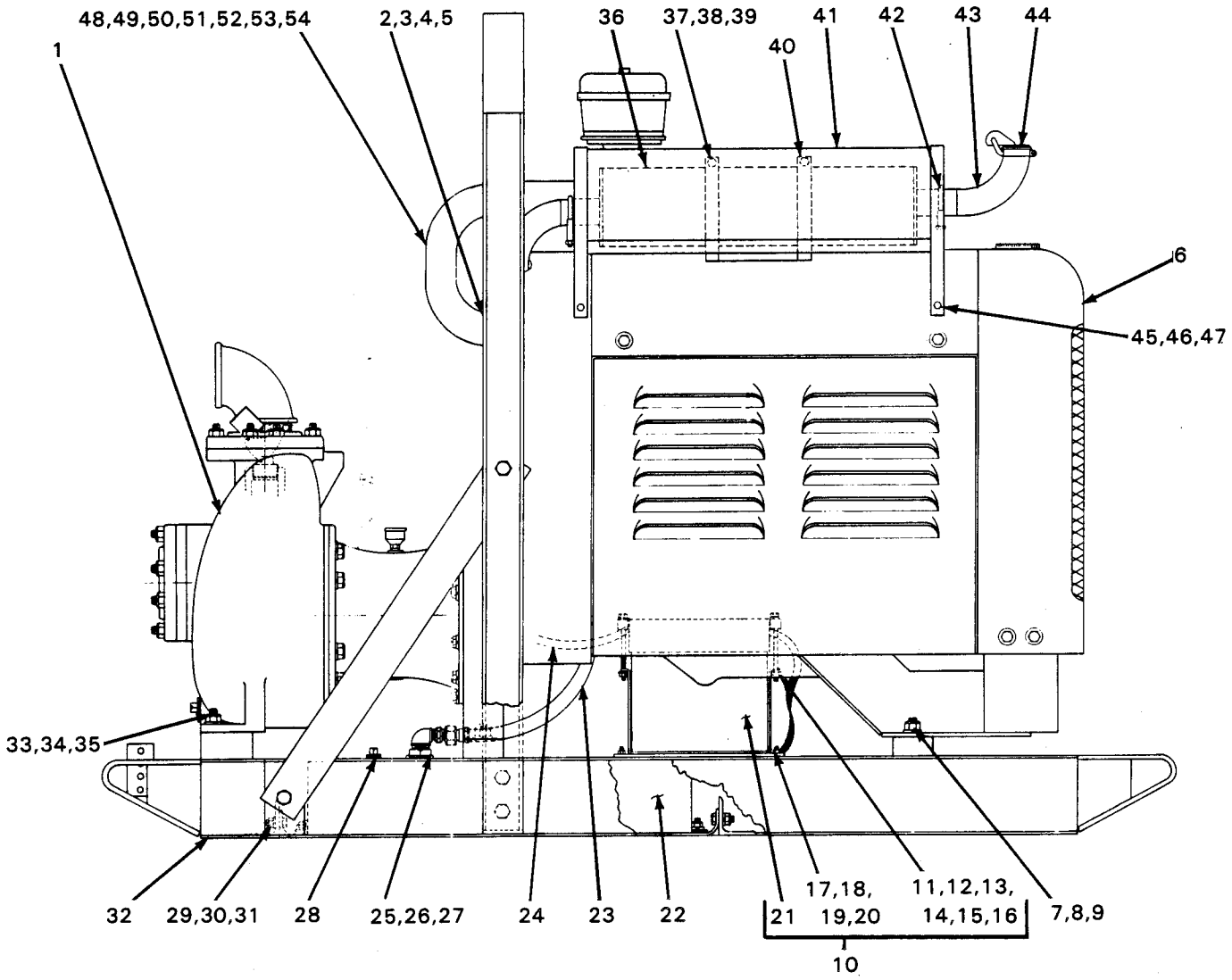

Figure 1. Pump Model 84A3-F200

PARTS LIST
Pump Model 84A3-F200
(From S/N 701330 up)

ITEM NO.	PART NAME	PART NUMBER	MATL CODE	QTY
1	PUMP END ASSY	84A3 (See Fig. 2)		1
2	HOISTING BAIL	13351-N	24000	1
3	HEX HD CAPSCREW	B01006	15991	8
4	LOCKWASHER	J00010	15991	8
5	HEX NUT	D00010	15991	8
6	FORD LSG-633P ENGINE	29118-181	-----	1
7	HEX HD CAPSCREW	B00805	15991	4
8	HEX NUT	D00008	15991	4
9	LOCKWASHER	J00008	15991	4
10	BATTERY BOX ASSY	GRP40-02	-----	1
11	-BATTERY FRAME	8355-B	24000	1
12	-BATTERY BOX	8356-B	24000	1
13	-HEX HD CAPSCREW	B00612	15991	2
14	-HEX NUT	D00006	15991	2
15	-LOCKWASHER	J00006	15991	2
16	-FLAT WASHER	K00006	15991	2
17	-GR CABLE ASSY	5795-AC	24040	1
18	-HEX HD CAPSCREW	B00604	15991	2
19	-HEX NUT	D00006	15991	2
20	-LOCKWASHER	J00006	15991	2
21	-12V BATTERY	S01338	-----	1
22	FUEL TANK AND GUARD ASSEMBLY	46711-033	-----	1
	-TANK GUARD ASSY	42381-017	24150	1
	-FUEL TANK	46711-034	24150	1
23	FUEL LINE ASSY	12618-F	-----	1
24	CABLE ASSY	6926-Z	24040	1
25	FUEL OUT ASSY	10765	24030	1
26	REDUCING ELBOW	Q00604	11990	1
27	CONNECTOR	S01344	-----	1
28	PIPE PLUG	P00008	11990	1
29	HEX HD CAPSCREW	B00604	15991	10
30	LOCKWASHER	J00006	15991	10
31	HEX NUT	D00006	15991	10
32	COMB BASE	41566-590	-----	1
33	HEX HD CAPSCREW	B01007	15991	2
34	HEX NUT	D00010	15991	2
35	LOCKWASHER	J00010	15991	2
36	MUFFLER	29334-119	-----	1
37	HEX HD CAPSCREW	B00505	15991	2
38	LOCKWASHER	J00005	15991	2
39	HEX NUT	D00005	15991	2
40	SADDLE	13692	24000	1
41	MUFFLER GRD ASSY	42331-014	24150	1
42	MUFFLER CLAMP	S00933	-----	2
43	2-EXHAUST ELBOW	29334-332	-----	1
44	WEATHER CAP	S01246	-----	1
45	HEX HD CAPSCREW	B00503	15991	6
46	LOCKWASHER	J00005	15991	6
47	HEX NUT	D00005	15991	6
48	*AIR CLEANER HOSE	31417-044	19190	1
49	HOSE CLAMP	26518-671	-----	4
50	*AIR CLEANER HOSE	31417-045	19190	1
51	AIR CLEANER PIPE	31921-025	15990	1
52	WELL NUT	21757-036	-----	4
53	HEX HD CAPSCREW	B00405	15991	4
54	FLAT WASHER	K00004	15991	4
NOT SHOWN:				
	BATTERY TAG	6588-S	00000	1
OPTIONAL:				
	WHEEL KIT	GRP30-30	-----	1

*INDICATES PARTS RECOMMENDED FOR STOCK

Above Serial Numbers Do Not Apply To Pumps Made In Canada.

CANADIAN SERIAL NO ..... AND UP

SECTIONAL DRAWING

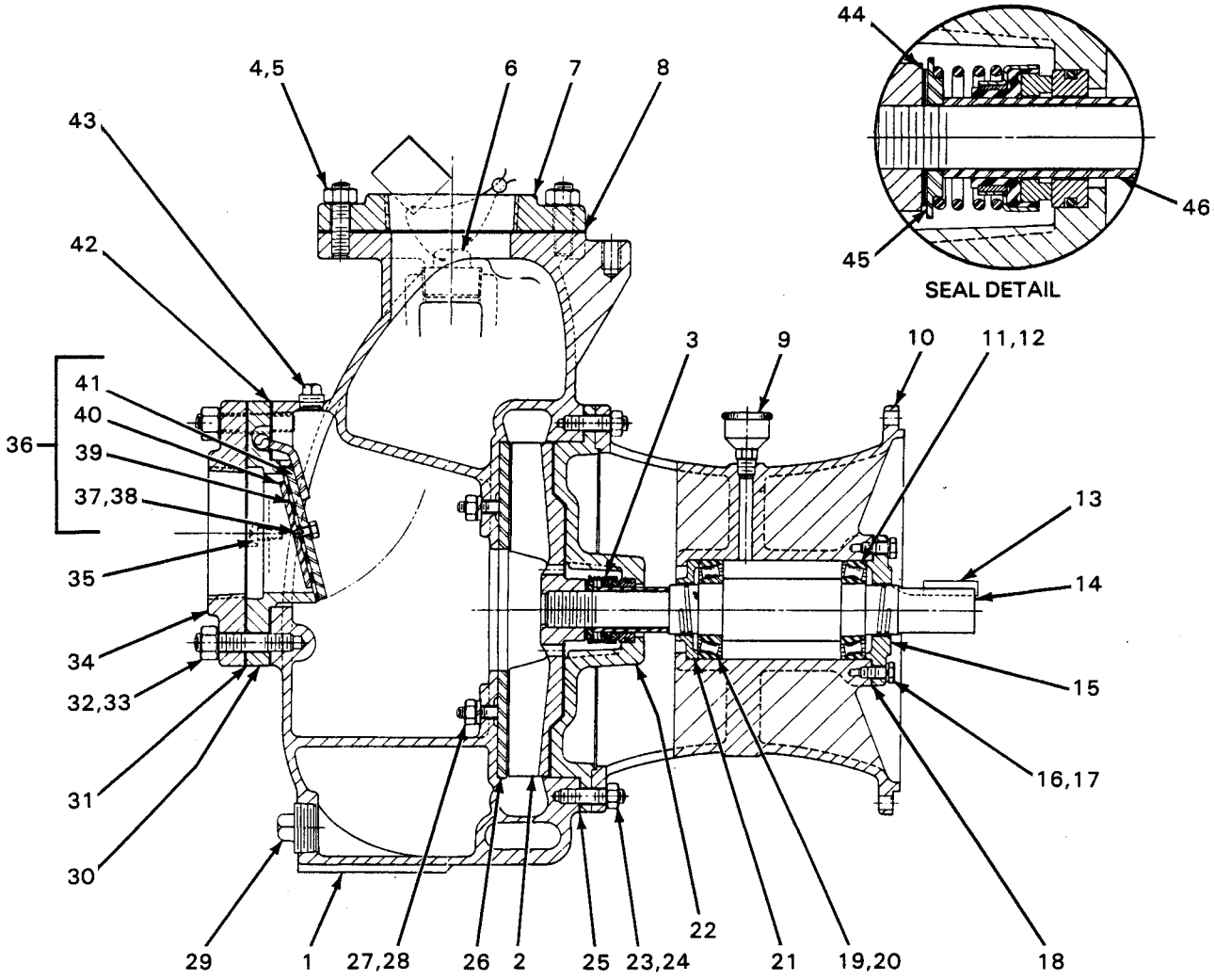

Figure 2. Pump End Only Model 84A3-F200

PARTS LIST
Pump End Only Model 84A3-F200

ITEM NO.	PART NAME	PART NUMBER	MATL CODE	QTY	ITEM NO.	PART NAME	PART NUMBER	MATL CODE	QTY
1	PUMP CASING	7288	10010	1	28	HEX NUT	D00008	15991	2
2	*IMPELLER ASSY	2691-D	10010	1	29	CASING DRAIN PLUG	P00020	11990	1
3	*SEAL ASSY	25271-903	-----	1	30	CHECK VALVE SEAT	7336	10010	1
4	STUD	C01010	15991	8	31	*SUCT FLANGE GSKT	1676-GB	18000	1
5	HEX NUT	D00010	15991	8	32	STUD	C01013	15991	8
6	FILL PLUG ASSY	48271-067	-----	1	33	HEX NUT	D00010	15991	8
7	DISCHARGE FLANGE	1756	10010	1	34	SUCTION FLANGE	1756	10010	1
8	*DISCH FLANGE GSKT	1676-GB	18000	1	35	RD HD MACH SCREW	X00403	17090	2
9	*INTERM GREASE CUP	S00035	-----	1	36	CHECK VALVE ASSY	7340-A	-----	1
10	INTERMEDIATE	36	10010	1	37	-HEX HD CAPSCREW	B00403	17000	2
11	*BEARING CUP	S01086	-----	1	38	-LOCKWASHER	J00004	17000	2
12	*BEARING CONE	S01087	-----	1	39	* -CHECK VALVE	7341	19140	1
13	*IMP SHAFT KEY	N00607	15990	1	40	* -VALVE WEIGHT	7339	15990	1
14	*IMP SHAFT	45	15010	1	41	* -VALVE WEIGHT	7337	24000	1
15	BEARING CAP	43-X	10010	1	42	*CHECK VALVE SEAT GSKT	7336-GA	18000	1
16	HEX HD CAPSCREW	B00604	15991	4					
17	LOCKWASHER	J00006	15991	4	43	PIPE PLUG	P00004	11990	1
18	*BRG SHIM SET	48261-031	-----	1	44	*ADJ SHIM SET	37-J	17090	1
19	*BEARING CUP	S01086	-----	1	45	SPRING WASHER	2889-A	15990	1
20	*BEARING CONE	S01087	-----	1	46	SHAFT SLEEVE	4523	17030	1
21	BRG CLOSURE	44	10010	1	NOT SHOWN:				
22	SEAL PLATE ASSY	3606	10010	1		NAME PLATE	2613-AY	13990	1
23	STUD	C00809	15991	8		DRIVE SCREW	BM#04-03	15990	4
24	HEX NUT	D00008	15991	8		STRAINER	S02003	-----	1
25	*CASING GSKT SET	34-GD	18000	1		PIPE ELBOW	R00064	11990	1
26	*WEAR PLATE ASSY	2612-A	15990	1		PIPE NIPPLE	T00064	15070	1
27	LOCKWASHER	J00008	15991	2		INTERM GUARD	42381-031	24150	2

*INDICATES PARTS RECOMMENDED FOR STOCK

Above Serial Numbers Do Not Apply To Pumps Made In Canada.

CANADIAN SERIAL NO ..... AND UP

SECTIONAL DRAWING

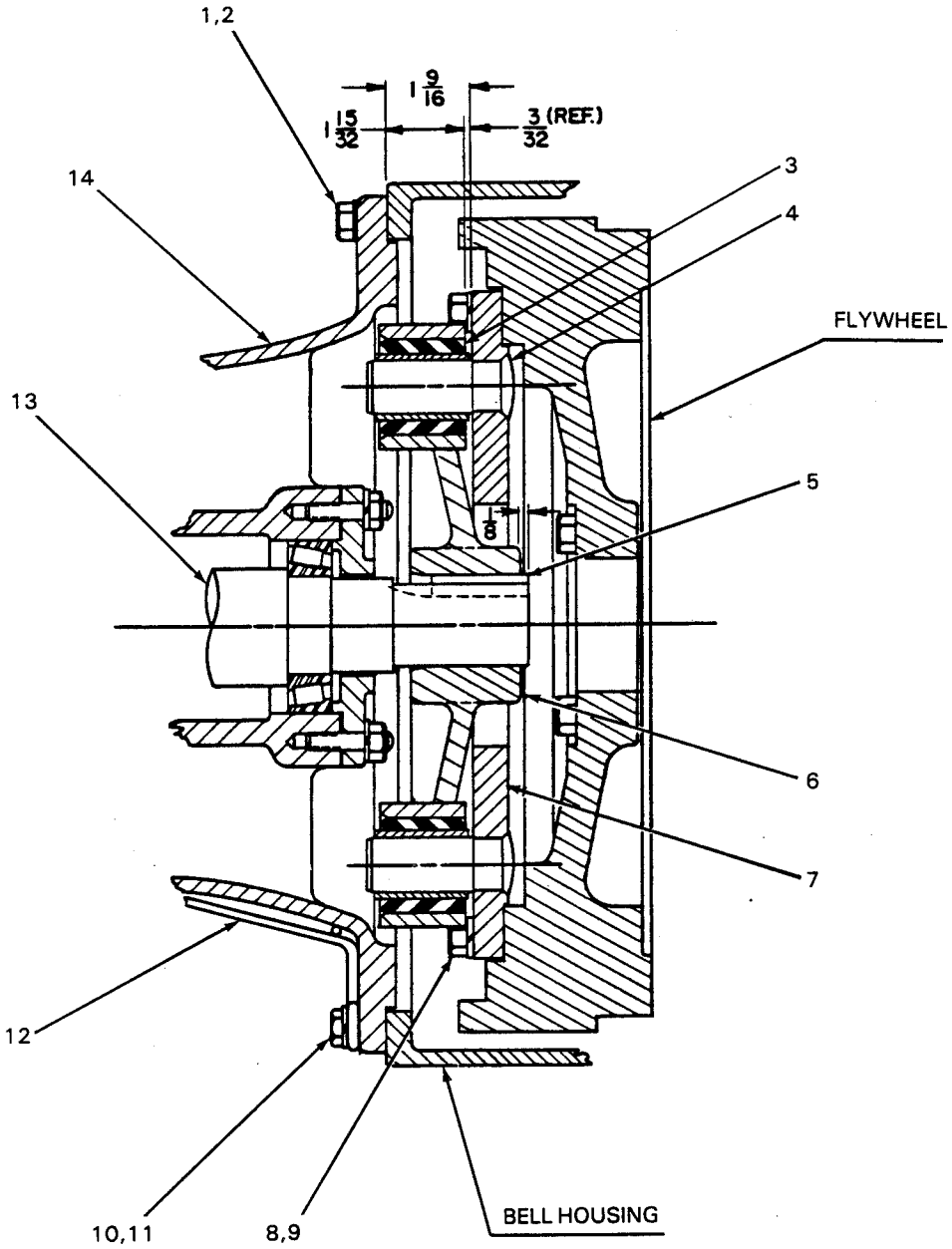

Figure 3. Drive Assembly For Pump Model 84A3-F200

PARTS LIST
Drive Assembly 44162-023 For Pump Model 84A3-F200

ITEM NO.		PART NAME	PART NUMBER	MATL CODE	QTY
1		LOCKWASHER	J00006	15991	8
2		HEX HD CAPSCREW	B00604	15991	8
3	*	DYNA FLEX JOINT	S02110	-----	2
4	*	DRIVE PIN	13819	15030	2
5		IMPELLER SHAFT KEY	N00607	15990	REF
6		DRIVE ARM ASSEMBLY	13817-D	-----	1
7		DRIVE PLATE ASSEMBLY	44131-005	-----	1
8		LOCKWASHER	J00006	15991	8
9		HEX HD CAPSCREW	B00605	15991	8
10		LOCKWASHER	J00006	15991	4
11		HEX HD CAPSCREW	B00605	15991	4
12		INTERMEDIATE GUARD	42381-031	-----	REF
13		IMPELLER SHAFT	45	15010	REF
14		INTERMEDIATE	36	10010	REF

*INDICATES PARTS RECOMMENDED FOR STOCK

PUMP AND SEAL DISASSEMBLY AND REASSEMBLY

This pump requires little service due to its rugged, minimum-maintenance design. However, if it becomes necessary to inspect or replace the wearing parts, follow these instructions which are keyed to the sectional views (see figure 1, 2 and 3) and the accompanying parts lists.

Before attempting to service the pump, take precautions to ensure that the engine will remain inoperative and close all connecting valves in the suction and discharge lines.

For engine disassembly and repair, consult the literature supplied with the engine or contact your local engine representative.

WARNING

Before attempting to open or service the pump:

1. Familiarize yourself with this manual.
2. Disconnect the engine to ensure that the pump will remain inoperative.
3. Allow the pump to cool if overheated.
4. Vent the pump slowly and cautiously.
5. Close the suction and discharge valves.
6. Check the temperature before opening any covers, plates, or plugs.
7. Drain the pump.

Suction Check Valve Removal

(Figure 2)

Before attempting to service the check valve (36) remove the pump casing drain plug (29) and drain pump. Clean and reinstall the drain plug.

For access to the check valve, remove the suction piping. Remove the nuts (33) securing the suction flange and gasket (34 and 31) to the pump casing (1).

Inspect the suction flange gasket (31) for wear or damage, and replace as required.

Disengage the machine screw (35) and pull the check valve seat (30), gasket (42), and check valve assembly (36) from the suction port.

Remove the hardware (37 and 38) securing the check valve (39) and weights (40 and 41) and inspect all parts for wear or damage.

Pump Disassembly

(Figure 2)

To service the wear plate, impeller, seal assembly, or seal plate, the pump end must be removed from the base and intermediate. See Figure 1, and remove the hardware (33, 34, and 35) securing the pump casing to the base.

Remove the hex nuts (24), securing the pump casing (1) to the seal plate (22) and intermediate (10). Separate the pump casing and gasket set (25) from the seal plate and intermediate. Inspect the gasket set for wear or damage and replace as required.

WARNING

Use lifting and moving equipment in good repair and with adequate capacity to prevent injuries to personnel or damage to equipment.

Inspect the wear plate (26), and replace if scored or worn. To remove the wear plate, disengage the hardware (27 and 28) from the wear plate studs and pull the wear plate from the pump casing.

Use an impeller wrench to remove the impeller. If an impeller wrench is not available, place a block of wood against one of the vanes and strike it sharply with a hammer. **Be careful** not to damage the vane. The impeller will unscrew in a counterclockwise direction (when facing the impeller). Use caution when removing the impeller; tension on the seal spring will be released as the impeller is unscrewed.

Inspect the impeller, and replace if cracked or badly worn. Slide the impeller shims (49) from the shaft. To ease reassembly, tag and tie the shims.

Seal Disassembly

(Figure 2)

Slide the centering washer (45) off the shaft. Remove the seal assembly (3) as a complete unit by pulling the seal plate (22) from the intermediate. Lay the seal plate on a clean flat surface and press the stationary seal seat from the bore.

Remove the shaft sleeve (46) from the impeller shaft.

If no further disassembly is required, refer to **Seal Reassembly**.

Separating Intermediate And Drive Assembly From Engine

(Figure 3)

If necessary to separate the intermediate and drive assemblies from the engine, support the intermediate using a suitable hoist and sling. Remove the hardware (2 and 11) securing the intermediate (14) and intermediate guards (12) to the engine bellhousing. Separate the assemblies by pulling straight away from the engine.

As the assemblies separate, the drive pins (4) will disengage from the drive arm assembly (6). The drive arm assembly and the shaft key (5) are a tight press fit onto the shaft (13), and will remain on the shaft.

It is not necessary to remove the drive plate assembly (7) from the engine flywheel unless the drive pins are bent or worn and must be replaced. To remove the drive plate assembly, remove the hardware (8 and 9) securing the assembly to the flywheel.

Use a bearing puller to remove the drive arm assembly from the impeller shaft. Remove the shaft key.

Inspect the dyna flex joints (3) and replace them if worn. The dyna flex joints are press fit in the drive arm.

Impeller Shaft And Bearing Disassembly

(Figure 2)

CAUTION

> Shaft and bearing disassembly in the field is not recommended. These operations should be performed only in a properly-equipped shop by qualified personnel.

Remove the hardware (16 and 17) securing the bearing cap (15) to the intermediate, and remove the bearing cap and bearing shim set (18). Tag and tie the bearing shims, or measure and record their thickness.

Place a block of wood against the impeller end of the shaft (14), and drive the shaft and assembled bearings out of the intermediate. **Be Careful** not to damage the shaft. Remove the outboard bearing cup (11) from the bearing cone (12).

NOTE

> There is no provision for draining the grease from the intermediate cavity. Place a drip pan under the intermediate before removing the bearing.

Place the intermediate on a level surface with the drive side down, and press the bearing closure (21) and inboard bearing cup (19) from the intermediate bore.

Use a bearing puller to remove the inboard bearing cone (20) and outboard bearing cone (12) from the impeller shaft.

Impeller Shaft And Bearing Reassembly

(Figure 2)

Remove the grease cup (9) from the intermediate and flush the old bearing lubricant from the cavity. Clean the shaft, intermediate, and all component parts (except the bearings) with a cloth soaked in cleaning solvent. Inspect the parts for wear, and replace them as necessary.

WARNING

Most cleaning solvents are toxic and flammable. Use them only in a well-ventilated area free from excessive heat, sparks, and flame. Read and follow all precautions printed on solvent containers.

Clean the bearings thoroughly in **fresh** cleaning solvent. Dry the bearings with filtered compressed air and coat with light oil. Inspect the bearings and replace as necessary.

CAUTION

Bearings must be kept free of all dirt and foreign material. Failure to do so will greatly shorten bearing life. DO NOT spin dry bearings. This may scratch the rollers or races and cause premature bearing failure.

The bearing tolerances provide a light press fit onto the impeller shaft, and a snug push fit into the intermediate. If the bearing slips on and off easily, the shaft is worn and must be replaced. The intermediate housing must be replaced if the bearings do not fit snugly.

Install the inboard and outboard bearing cones on the impeller shaft. Be sure to position the high side of the tapered roller bearings toward the lubrica tion cavity.

NOTE

When installing the bearing cone onto the shaft, **never** hit or press against the rollers or roller cage. Press **only** on the inner race.

Press the cones on the shaft until seated squarely against the shaft shoulders.

Press the bearing closure (21) and inboard bearing cup (19) into the intermediate until seated squarely against the intermediate shoulder.

Slide the shaft and assembled bearing cones into the intermediate bore until the inboard bearing cone (20) fully engages the inboard bearing cup.

NOTE

When installing the outboard bearing cup into the intermediate, push against the outer race. **Never** hit the rollers or roller cage.

Press the outboard bearing cup (11) over the outboard bearing cone (12), and install the bearing shims.

NOTE

Shaft endplay should be between .002 and .010 inch. Add or remove bearing shims to establish the correct endplay.

Secure the bearing cap to the intermediate, lubricate the bearings as indicated in **LUBRICATION**.

Securing Intermediate And Drive Assembly To Engine

Secure the drive plate assembly to the engine flywheel.

Install the impeller shaft key and press the drive arm assembly on the impeller shaft.

CAUTION

Make certain that the drive plate and drive arm assemblies are mounted in accordance with the dimensions shown in Figure 3. If the drive assembly is not properly positioned on the impeller shaft, a preload condition can occur and cause premature thrust bearing failure.

Align the drive arm assembly so that the drive pins will engage the dyna flex joints, and secure the intermediate and intermediate guards to the engine bellhousing.

Seal Reassembly

(Figure 2 and 4)

Clean the seal cavity and shaft with a cloth soaked in fresh cleaning solvent.

WARNING

Most cleaning solvents are toxic and flammable. Use them only in a well-ventilated area free from excessive heat, sparks, and flame. Read and follow all precautions printed on solvent containers.

The seal is not normally reused since any damage to the precision finished faces could result in premature seal failure. However, if it is necessary to reuse the old seal, wash all metallic parts in fresh cleaning solvent and dry them thoroughly.

Handle the seal parts with extreme care to prevent damage to the precision finished faces. Even finger prints on the faces can shorten seal life. Cleanliness is essential.

Inspect the seal components for wear, scoring, grooves, and other damage that might cause leakage. If any components are worn, replace the complete seal; **never mix old and new seal parts.**

If a replacement seal is being used, remove it from the container, and inspect the precision finished faces to ensure that they are free of any foreign matter.

Lubricate the stationary seat O-ring with petroleum jelly or light oil and install it in the stationary seat. Press this assembly squarely into the seal bore. The polished (lapped) surface should be face out. Be careful not to damage the seal face.

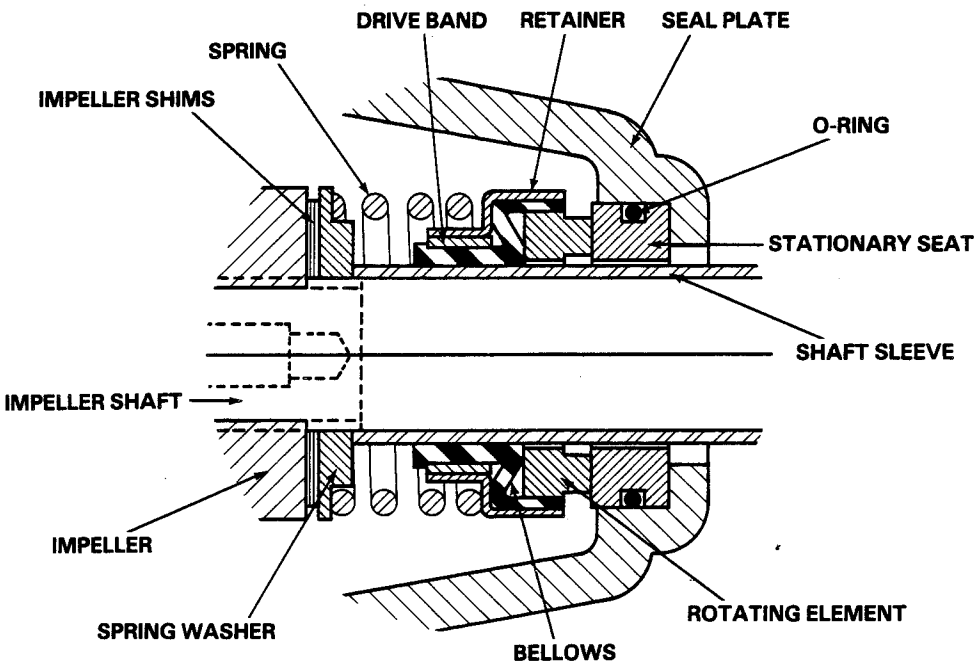

Figure 4. 25271-903 Seal Assembly

CAUTION

This seal is not designed for operation at temperatures above 160°F. Do not use at higher operating temperatures.

Slide the seal plate onto the shaft and against the intermediate. Temporarily secure the seal plate to the intermediate using two capscrews and nuts (1/2 UNC X 1 1/2 inch long, not supplied).

Clean and polish the shaft sleeve to remove small scratches and nicks. Replace it if badly worn. **Do not** install at this time.

Lubricate the shaft sleeve with petroleum jelly or light oil and subassemble the seal parts as shown in Figure 4. The rotating seal element must be **just flush** with the chamfered end of the shaft sleeve.

Apply a drop of light oil on each of the precision seal faces, **never** use grease. Slide the sleeve and subassembled seal onto the shaft. Push the sleeve through the seal until the undercut end seats against the shaft shoulder.

Install the spring and centering washer.

Pump Reassembly

(Figure 2)

Inspect the impeller, and replace it if cracked or badly worn.

Slide the same number of impeller adjusting shims (44) as previously removed onto the shaft and screw the impeller on until tight.

A clearance of .020 to .040 inch between the impeller and the seal plate is necessary for maximum pump efficiency. Measure this clearance, and add or remove impeller shims until it is reached.

NOTE

The seal plate must be tight against the intermediate while setting the back impeller clearance.

If the wear plate was removed for replacement, secure the wear plate to the pump casing using the attaching hardware at this time.

Remove the two capscrews temporarily holding the seal plate and install the same thickness of pump casing gaskets (25) as previously removed. Secure the pump casing to the intermediate.

A clearance of .008 to .015 inch between the impeller and the wear plate is also recommended for maximum pump efficiency. This clearance can be measured by reaching through the suction port with a feeler gauge. Add or subtract pump casing gaskets (25) until the proper impeller clearance is attained.

Be sure to reinstall any leveling shims used under the pump casing mounting feet before installing the base mounting hardware.

Suction Check Valve Installation

(Figure 2)

Inspect the check valve components, and replace as required. Subassemble the check valve weights and gasket using the attaching hardware.

Install the check valve in the valve seat. Replace the seat gasket and secure the valve seat to the suction port using the round head machine screws. Replace the suction flange gasket and secure the suction flange. Check the operation of the check valve to ensure proper seating and free movement.

Final Pump Reassembly

(Figure 1)

Be sure the pump is secure to the base and engine.

Install the suction and discharge lines and open all valves. Make certain that all piping connections are secure.

Be sure the pump and engine have been properly lubricated, see **LUBRICATION**.

Fill the pump casing with clean liquid. Reinstall the fill plug and tighten it.

Refer to **OPERATION**, Section C, before putting the pump back into service.

LUBRICATION

Seal Assembly

The seal assembly is lubricated by the liquid being pumped.

Bearings

The bearing cavity was fully lubricated when shipped from the factory. When lubricating a dry (overhauled) bearing cavity, fill the intermediate through the grease cup (9, Figure 2) with approximately one-sixth of a pound of No. 0 lithium base grease. The lubricant level should be maintained approximately one-third full (just below the shaft).

There are no provisions in the bearing cavity to drain or flush the lubricant. The pump must be disassembled to completely clean and maintain this cavity.

Under normal conditions, change the grease each 5000 hours of operation, or at 12 month intervals, whichever occurs first. In extremely dirty or humid conditions, change more frequently.

For cold weather operation, consult the factory or a lubricant supplier for the recommended grade of grease.

Engine

Consult the literature supplied with the engine, or contact your local engine representative.

For U.S. and International Warranty Information,
Please Visit www.grpumps.com/warranty
or call:
U.S.: 419—755—1280
International: +1—419—755—1352

For Canadian Warranty Information,
Please Visit www.grcanada.com/warranty
or call:
519—631—2870

THE GORMAN-RUPP COMPANY • MANSFIELD, OHIO
GORMAN-RUPP OF CANADA LIMITED • ST. THOMAS, ONTARIO, CANADA