ACDE

OM-01310-OE03
January 31, 1984

10 SERIES™

INSTALLATION, OPERATION, PARTS LIST, AND MAINTENANCE MANUAL

THE GORMAN-RUPP COMPANY • MANSFIELD, OHIO
GORMAN-RUPP OF CANADA LIMITED • ST. THOMAS, ONTARIO, CANADA
Printed in U.S.A.

Copyright by the Gorman-Rupp Company

TABLE OF CONTENTS

INTRODUCTION I-1

WARNINGS - SECTION A A-1

INSTALLATION - SECTION B B-1
Pump Dimensions B-1
PREINSTALLATION INSPECTION B-2
POSITIONING PUMP B-3
Lifting B-3
Mounting B-3
Clearance B-3
SUCTION AND DISCHARGE PIPING B-4
Materials B-4
Line Configuration B-4
Connections to Pump B-4
Gauges B-4
SUCTION LINES B-4
Fittings B-5
Strainers B-5
Sealing B-5
Suction Lines In Sumps B-5
Suction Line Positioning B-6
DISCHARGE LINES B-6
Siphoning B-6
Valves B-7
Bypass Lines B-7

OPERATION - SECTION C C-1
PRIMING C-1
STARTING C-2
OPERATION C-2
Lines With a Bypass C-2
Lines Without a Bypass C-3
Leakage C-3
Liquid Temperature And Overheating C-3
Strainer Check C-3
Pump Vacuum Check C-4
STOPPING C-4
Cold Weather Preservation C-4
BEARING TEMPERATURE CHECK C-5

PUMP TROUBLESHOOTING - SECTION D D-1

PUMP MAINTENANCE AND REPAIR - SECTION E E-1
PERFORMANCE CURVE E-1
PUMP MODEL - PARTS LIST E-3
PUMP END ASSY - PARTS LIST E-5
DRIVE ASSY - PARTS LIST E-7
PUMP AND SEAL DISASSEMBLY AND REASSEMBLY E-8
Back Cover Removal E-8
Suction Check Valve Removal E-9
Impeller Removal E-9
Seal Disassembly E-9
Pump Disassembly E-10
Separating Intermediate And Drive Assembly From Engine E-10
Impeller Shaft And Bearing Disassembly E-11
Impeller Shaft And Bearing Reassembly E-11
Securing Intermediate And Drive Assembly To Engine E-13
Seal Plate Reassembly E-13
Seal Reassembly E-14
Impeller Reassembly And Adjustment E-15

Suction Check Valve Installation E-16
Back Cover Installation E-17
Final Pump Reassembly E-17
LUBRICATION E-17
Seal Assembly E-17
Bearings E-18
Engine E-18

INTRODUCTION

This Installation, Operation, and Maintenance Manual is designed to help you achieve the best performance and longest life from your Gorman-Rupp pump.

This pump is a 10 Series, semi-open impeller, self-priming centrifugal model with a suction check valve. The pump is designed to pump dirty water containing specified entrained solids. The basic materials of construction for wetted parts is gray iron with ductile iron impeller and steel wearing parts.

If there are any questions regarding the pump or its application which are not covered in this manual or in other literature accompanying this unit, please contact your Gorman-Rupp distributor, or write:

The Gorman-Rupp Company
P.O. Box 1217
Mansfield, Ohio 44901

or

Gorman-Rupp of Canada Limited
70 Burwell Road
St. Thomas, Ontario N5P 3R7

For information or technical assistance on the engine, contact the engine manufacturer's local dealer or representative.

The following are used to alert maintenance personnel to procedures which require special attention, to those which could damage equipment, and to those which could be dangerous to personnel:

NOTE

Instructions to aid in installation, operation, and maintenance or which clarify a procedure.

CAUTION

Instructions which must be followed to avoid causing damage to the product or other equipment incidental to the installation. These instructions describe the requirements and the possible damage which could result from failure to follow the procedures.

WARNING

These instructions must be followed to avoid causing injury or death to personnel, and describe the procedure required and the injury which could result from failure to follow the procedure.

WARNINGS - SECTION A

THESE WARNINGS APPLY TO 10 SERIES ENGINE DRIVEN PUMPS. REFER TO THE MANUAL ACCOMPANYING THE ENGINE BEFORE ATTEMPTING TO BEGIN OPERATION.

WARNING

Before attempting to open or service the pump:

1. Familiarize yourself with this manual.
2. Remove the key from the engine ignition to ensure that the pump will remain inoperative.
3. Allow the pump to cool if overheated.
4. Vent the pump slowly and cautiously.
5. Close the suction and discharge valves.
6. Check the temperature before opening any covers, plates, or plugs.
7. Drain the pump.

WARNING

This pump is designed to pump dirty water with specified entrained solids. Do not attempt to pump volatile, corrosive, or flammable liquids which may damage the pump or endanger personnel as a result of pump failure.

WARNING

After the pump has been located in operating position, make certain that the wheels have been blocked and secured before attempting to operate the pump.

WARNING

After the pump has been installed, make certain that the pump and all piping connections are secure before operation.

WARNING

Do not operate the pump without shields and/or guards in place over the drive shafts, belts and/or couplings, or other rotating parts. Exposed rotating parts can catch clothing, fingers, or tools, causing severe injury to personnel.

WARNING

Do not operate the pump against a closed discharge valve for long periods of time. This could bring the liquid to a boil, build pressure, and cause the pump to rupture or explode.

WARNING

Overheated pumps can cause severe burns and injury. If overheating of the pump occurs:

1. Stop the pump immediately.
2. Allow the pump to cool.
3. Refer to instructions in this manual before re-starting the pump.

WARNING

Do not remove plates, covers, gauges, pipe plugs, or fittings from an overheated pump. Vapor pressure within the pump can cause parts being disengaged to be ejected with great force. Allow the pump to cool before servicing.

WARNING

Fuel used by internal combustion engines presents an extreme explosion and fire hazard. Make certain that all fuel lines are securely connected and free of leaks. Never refuel a hot or running engine. Avoid overfilling the fuel tank. Always use the correct type of fuel.

WARNING

Do not operate an internal combustion engine in an explosive atmosphere. When operating internal combustion engines in an enclosed area, make certain that exhaust fumes are piped to the outside. These fumes contain carbon monoxide, a deadly gas that is colorless, tasteless, and odorless.

INSTALLATION - SECTION B

Since pump installations are seldom identical, this section offers only general recommendations and practices required to inspect, position, and arrange the pump and piping.

Most of the information pertains to a standard **static lift application** where the pump is positioned above the free level of liquid to be pumped.

If installed in a **flooded suction application** where the liquid is supplied to the pump under pressure, some of the information such as mounting, line configuration, and priming must be tailored to the specific application. Since the pressure supplied to the pump is critical to performance and safety, **be sure** to limit the incoming pressure to 50% of the maximum pressure developed by the pump.

For further assistance, contact your Gorman-Rupp distributor or the Gorman-Rupp Company.

Pump Dimensions

See Figure 1 for the approximate physical dimensions of this pump.

OUTLINE DRAWING

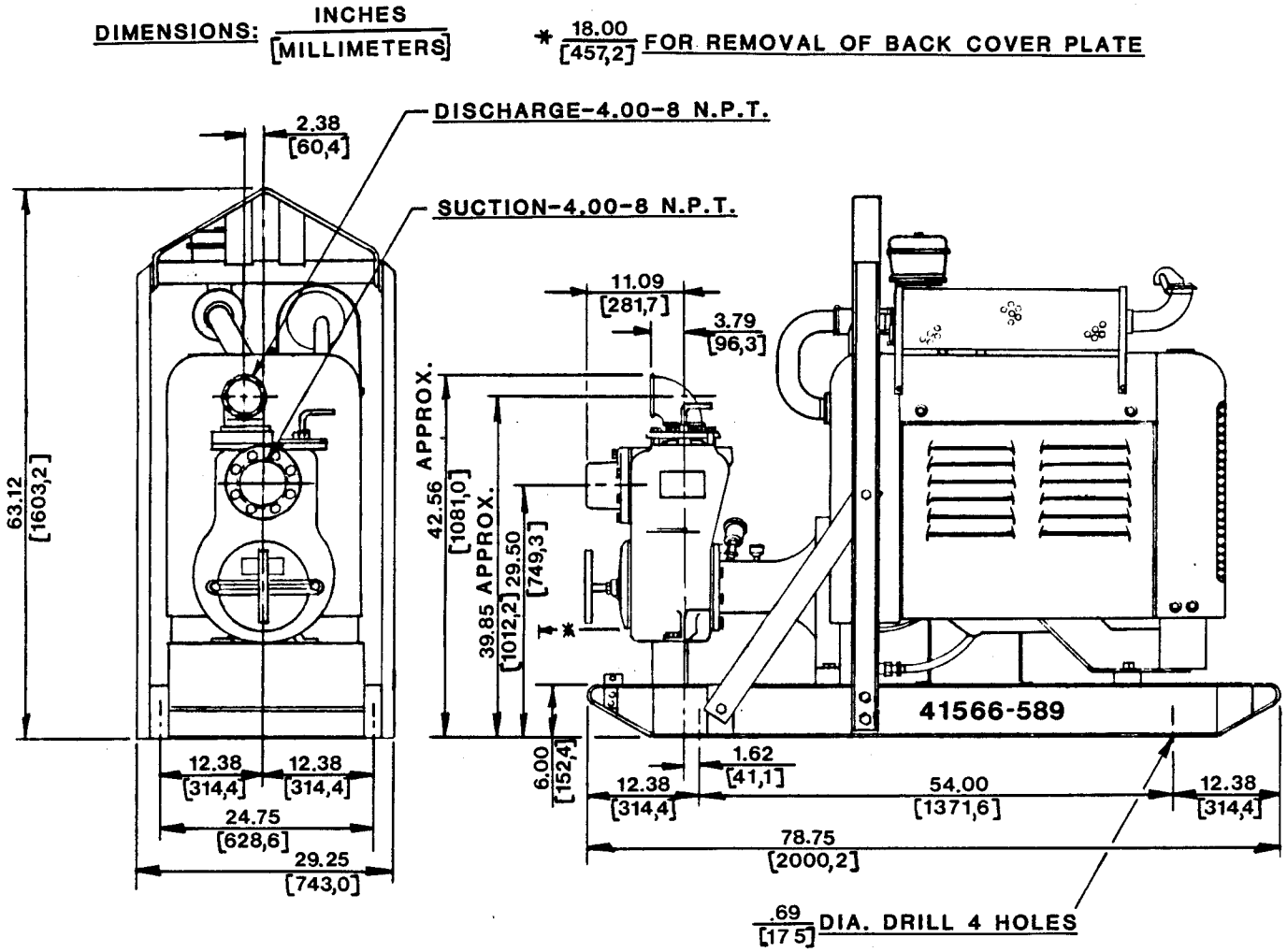

Figure 1. Pump Model 14C20-F200

PREINSTALLATION INSPECTION

The pump assembly was inspected and tested before shipment from the factory. Before installation, inspect the pump for damage which may have occurred during shipment. Check as follows:

a. Inspect the pump for cracks, dents, damaged threads, and other obvious damage.

b. Check for and tighten loose bolts, nuts, capscrews, and other attaching hardware. Since gaskets tend to shrink after drying, check for and tighten loose nuts and capscrews securing mating surfaces.

c. Carefully read all tags, decals, and markings on the pump assembly, and follow the instructions indicated.

d. Check all lubricant levels and lubricate as necessary. Refer to LUBRICATION in the MAINTENANCE AND REPAIR section of this manual and perform duties as instructed.

e. If the pump and engine have been stored for more than 12 months, some of the components or lubricants may have exceeded their maximum shelf life. These **must be inspected or replaced** to ensure maximum pump service.

If the maximum shelf life has been exceeded, or if anything appears to be abnormal, contact your Gorman-Rupp distributor or the factory to determine the repair or updating policy. **Do not** put the pump into service until appropriate action has been taken.

POSITIONING PUMP

Lifting

Use lifting equipment with a capacity of a least **6,500 pounds**. This pump weighs approximately **1,300 pounds**, not including the weight of accessories and wheel kit.

CAUTION

The pump assembly can be seriously damaged if the cables or chains used to lift and move the unit are improperly wrapped around the pump.

Mounting

Locate the pump in an accessible place as close as practical to the liquid being pumped. Level mounting is essential for proper operation. The pump may have to be supported or shimmed to provide for level operation or to eliminate vibration.

If the pump has been mounted on a moveable base, make certain the base is stationary by setting the brake and blocking the wheels before attempting to operate the pump.

Clearance

When positioning the pump, allow a clearance of at least **18 inches** in front of the back cover assembly to permit removal of the back cover, and of the rotating assembly, which must be removed through the back of the pump.

SUCTION AND DISCHARGE PIPING

Materials

Either pipe or hose may be used for suction and discharge lines; however, the materials must be compatible with the liquid being pumped. If hose is used in suction lines, it must be the rigid-wall, reinforced type to prevent collapse under suction. Using piping couplings in suction lines is not recommended.

Line Configuration

Keep suction and discharge lines as straight as possible to minimize friction losses. Make minimum use of elbows and fittings, which substantially increase friction loss. If elbows are necessary, use the long-radius type to minimize friction loss.

Connections to Pump

Before tightening a connecting flange, align it exactly with the pump port. Never pull a pipe line into place by tightening the flange bolts and/or couplings.

Lines near the pump must be independently supported to avoid strain on the pump which could cause excessive vibration, decreased bearing life, and increased shaft and seal wear. If hose-type lines are used, they should have adequate support to secure them when filled with liquid and under pressure.

Gauges

Most pumps are drilled and tapped for installing discharge pressure and vacuum suction gauges. If these gauges are desired for pumps that are not tapped, drill and tap the suction and discharge lines not less than 18 inches from the suction and discharge ports and install the lines. Installation closer to the pump may result in erratic readings.

SUCTION LINES

To avoid air pockets which could affect pump priming, the suction line must be as short and direct as possible. When operation involves a suction lift, the line must always slope upward to the pump from the source of the liquid being pumped; if the line slopes down to the pump at any point along the suction run, air pockets will be created.

Fittings

Suction lines should be the same size as the pump inlet. If reducers are used in suction lines, they should be the eccentric type, and should be installed with the flat part of the reducers uppermost to avoid creating air pockets. Valves are not normally used in suction lines, but if a valve is used, install it with the stem horizontal to avoid air pockets.

Strainers

If a strainer is furnished with the pump, be certain to use it; any spherical solids which pass through a strainer furnished with the pump will also pass through the pump itself.

If a strainer is not furnished with the pump, but is installed by the pump user, make certain that the total area of the openings in the strainer is at least three or four times the cross section of the suction line, and that the openings will not permit passage of solids larger than the solids handling capability of the pump.

This pump is designed to handle up to 3 inch diameter spherical solids.

Sealing

Since even a slight leak will affect priming, head, and capacity, especially when operating with a high suction lift, all connections in the suction line should be sealed with pipe dope to ensure an airtight seal. Follow the sealant manufacturer's recommendations when selecting and applying the pipe dope. The pipe dope should be compatible with the liquid being pumped.

Suction Lines In Sumps

If a single suction line is installed in a sump, it should be positioned away from the wall of the sump at a distance equal to one and one-half times the diameter of the suction line.

If there is a liquid flow from an open pipe into the sump, the flow should be kept away from the suction inlet because the inflow will carry air down into the sump, and air entering the suction line will reduce pump efficiency.

If it is necessary to position inflow close to the suction inlet, install a baffle between the inflow and the suction inlet at a distance one and one-half times the diameter of the suction pipe. The baffle will allow entrained air to escape from the liquid before it is drawn into the suction inlet.

If two suction lines are installed in a single sump, the flow paths may interact, reducing the efficiency of one or both pumps. To avoid this, position the suction inlets so that they are separated by a distance equal to at least three times the diameter of the suction pipe.

Suction Line Positioning

The depth of submergence of the suction line is critical to efficient pump operation. Figure 2 shows recommended minimum submergence vs. velocity.

NOTE

The pipe submergence required may be reduced by installing a standard pipe increaser fitting at the end of the suction line. The larger opening size will reduce the inlet velocity. Calculate the required submergence using the following formula based on the increased opening size (area or diameter).

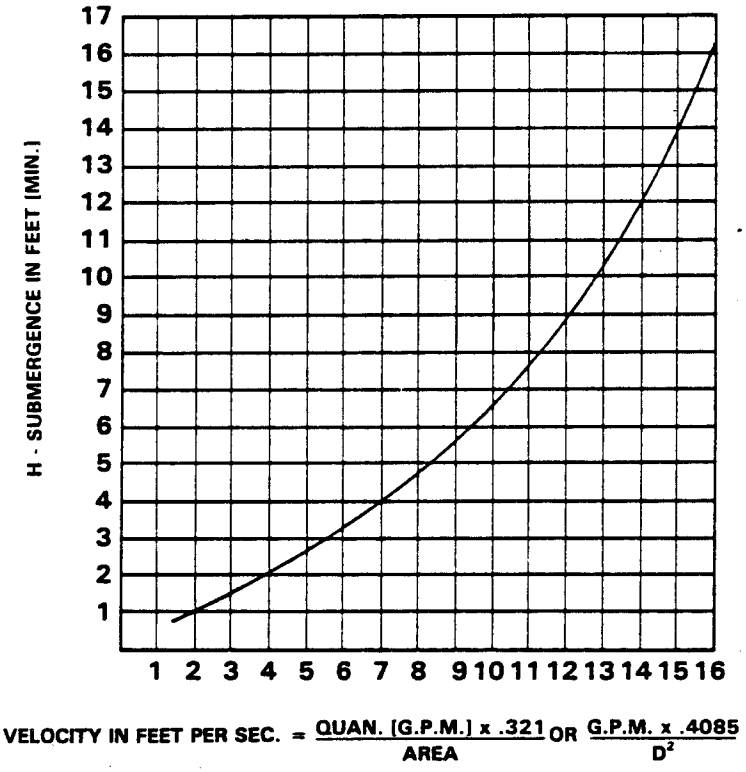

Figure 2. Recommended Minimum Suction Line Submergence Vs. Velocity

DISCHARGE LINES

Siphoning

Do not terminate the discharge line at a level lower than that of the liquid being pumped unless a siphon breaker is used in the line. Otherwise, a siphoning action causing damage to the pump could result.

Valves

A check valve in the discharge line is normally recommended, but it is not necessary in low discharge head applications.

If a throttling valve is desired in the discharge line, use a valve as large as the largest pipe to minimize friction losses. Never install a throttling valve in a suction line.

With high discharge heads, it is recommended that a throttling valve and a check valve be installed in the discharge line to protect the pump from excessive shock pressure and reverse rotation when it is stopped.

CAUTION

If application involves a high discharge head, gradually close the discharge throttling valve before stopping the pump.

Bypass Lines

If it is necessary to permit the escape of air to atmosphere during initial priming or in the repriming cycle, install a bypass line between the pump and the discharge check valve. The bypass line should be sized so that it does not affect pump discharge capacity.

Either a Gorman-Rupp automatic air release valve - which will automatically open to allow the pump to prime, and automatically close when priming is accomplished - or a hand-operated shutoff valve should be installed in the bypass line.

NOTE

The bypass line may clog frequently, particularly if the valve remains closed. If this condition occurs, either use a larger bypass line or leave the shutoff valve open during the pumping operation.

Do not terminate the discharge line at a level lower than that of the liquid being pumped unless a siphon breaker is used in the line. Otherwise, a siphoning action could result, causing damage to the pump.

OPERATION - SECTION C

WARNING

This pump is designed to pump dirty water with specified entrained solids. Do not attempt to pump volatile, corrosive, or flammable liquids which may damage the pump or endanger personnel as a result of pump failure.

WARNING

Never tamper with the governor to gain more power. The governor establishes safe operating limits that should not be exceeded. The maximum continuous operating speed is 2400 RPM.

PRIMING

Install the pump and piping as described in INSTALLATION. Make sure that the piping connections are tight, and that the pump is securely mounted. Check that the pump is properly lubricated (see LUBRICATION in MAINTENANCE AND REPAIR).

This pump is self-priming, but the pump should never be operated unless there is liquid in the casing.

CAUTION

Never operate a self-priming pump unless there is liquid in the casing. The pump will not prime when dry. Extended operation of a dry pump will destroy the seal assembly.

Add liquid to the pump casing when:

1. The pump is being put into service for the first time.
2. The pump has not been used for a considerable length of time.
3. The liquid in the pump casing has evaporated.

Once the pump casing has been filled, the pump will prime and reprime as necessary.

WARNING

After filling the pump casing, reinstall and tighten the fill plug. Do not attempt to operate the pump unless all connecting piping is securely installed. Otherwise, liquid in the pump forced out under pressure could cause injury to personnel.

To fill the pump, remove the pump casing fill cover or fill plug at the top of the casing and add clean liquid until the pump is filled. Replace the fill cover or fill plug before operating the pump.

STARTING

Consult the operations manual furnished with the engine.

OPERATION

CAUTION

Pump speed and operating condition points must be within the continuous performance range shown on the curve. See Section E, Page 1.

Lines With a Bypass

Either a Gorman-Rupp automatic air release valve or a hand operated shutoff valve may be installed in a bypass line.

If a Gorman-Rupp automatic air release valve has been installed, close the throttling valve in the discharge line. The Gorman-Rupp valve will automatically open to allow the pump to prime, and automatically close when priming has been accomplished. After the pump has been primed, and liquid is flowing steadily from the bypass line, open the discharge throttling valve.

If a hand operated shutoff valve has been installed, close the throttling valve in the discharge line, and open the bypass shutoff valve so that the pump will not have to prime against the weight of the liquid in the discharge line. When the pump has been primed, and liquid is flowing steadily from the bypass line, close the bypass shutoff valve and open the discharge throttling valve.

Lines Without a Bypass

Open all valves in the discharge line and start the power source. Priming is indicated by a positive reading on the discharge pressure gauge or by a quieter operation. The pump may not prime immediately because the suction line must first fill with liquid. If the pump fails to prime within five minutes, stop it and check the suction line for leaks.

After the pump has been primed, partially close the discharge line throttling valve in order to fill the line slowly and guard against excessive shock pressure which could damage pipe ends, gaskets, sprinkler heads, and any other fixtures connected to the line. When the discharge line is completely filled, adjust the throttling valve to the required flow rate.

Leakage

No leakage should be visible at pump mating surfaces, or at pump connections or fittings. Keep all line connections and fittings tight to maintain maximum pump efficiency.

Liquid Temperature And Overheating

The **maximum** liquid temperature for this pump is 160°F. Do not apply it at a higher operating temperature.

Overheating can occur if the valves in the suction or discharge lines are closed. Operating against closed valves could bring the liquid to a boil, build pressure, and cause the pump to rupture or explode. If overheating occurs, stop the pump and allow it to cool before servicing it. Refill the pump casing with cool liquid.

WARNING

Do not remove plates, covers, gauges, pipe plugs, or fittings from an overheated pump. Vapor pressure within the pump can cause parts being disengaged to be ejected with great force. Allow the pump to cool before servicing.

Strainer Check

If a suction strainer has been shipped with the pump or installed by the user, check the strainer regularly, and clean it as necessary. The strainer should also be checked if pump flow rate begins to drop. If a vacuum suction gauge has been installed, monitor and record the readings regularly to detect strainer blockage.

Pump Vacuum Check

With the pump inoperative, install a vacuum gauge in the system, using pipe dope on the threads. Block the suction line and start the pump. At operating speed the pump should pull a vacuum of 20 inches or more of mercury. If it does not, check for air leaks in the seal, gasket, or discharge valve.

Open the suction line, and read the vacuum gauge with the pump primed and at operation speed. Shut off the pump. The vacuum gauge reading will immediately drop proportionate to static suction lift, and should then stabilize. If the vacuum reading falls off rapidly after stabilization, an air leak exists. Before checking for the source of the leak, check the point of installation of the vacuum gauge.

STOPPING

Never halt the flow of liquid suddenly. If the liquid being pumped is stopped abruptly, damaging shock waves can be transmitted to the pump and piping system. Close all connecting valves slowly. If the pump is driven by an engine, reduce the throttle speed slowly and allow the engine to idle briefly before stopping.

CAUTION

If application involves a high discharge head, gradually close the discharge throttling valve before stopping the pump.

After stopping the pump, remove the engine ignition key or take other action to ensure that the pump will remain inoperative.

Cold Weather Preservation

In below freezing conditions, drain the pump to prevent damage from freezing. Also, clean out any solids by flushing with a hose. Operate the pump for approximately one minute; this will remove any remaining liquid that could freeze the pump rotating parts.

If the pump will be idle for more than a few hours, or if it has been pumping liquids containing a large amount of solids, drain the pump, and flush it thoroughly with clean water. To prevent large solids from clogging the drain port and preventing the pump from completely draining, insert a rod or stiff wire in the drain port, and agitate the liquid during the draining process. Clean out any remaining solids by flushing with a hose.

BEARING TEMPERATURE CHECK

Bearings normally run at higher than ambient temperatures because of heat generated by friction. Temperatures up to 160°F are considered normal for bearings, and they can operate safely to at least 180°F.

Checking bearing temperatures by hand is inaccurate. Bearing temperatures can be measured accurately by placing a contact-type thermometer against the housing. Record this temperature for future reference.

A sudden increase in bearing temperatures is a warning that the bearings are at the point of failing to operate properly. Make certain that the bearing lubricant is of the proper viscosity and at the correct level (see LUBRICATION in MAINTENANCE AND REPAIR). Bearing overheating can also be caused by shaft misalignment and/or excessive vibration.

When pumps are first started, the bearings may seem to run at temperatures above normal. Continued operation should bring the temperatures down to normal levels.

PUMP TROUBLESHOOTING - SECTION D

WARNING

Before attempting to open or service the pump:

1. Familiarize yourself with this manual.
2. Remove the key from the engine ignition to ensure that the pump will remain inoperative.
3. Allow the pump to cool if overheated.
4. Vent the pump slowly and cautiously.
5. Close the suction and discharge valves.
6. Check the temperature before opening any covers, plates, or plugs.
7. Drain the pump.

TROUBLE	POSSIBLE CAUSE	PROBABLE REMEDY
PUMP FAILS TO PRIME	Air leak in suction line.	Correct leak.
	Lining of suction hose collapsed.	Replace suction hose.
	Leaking or worn seal or pump gasket.	Check pump vacuum. Replace leaking or worn seal or gasket.
	Suction check valve or foot valve clogged or binding.	Clean valve.
	Suction lift or discharge head too high.	Check piping installation and install bypass line if needed. See INSTALLATION.
	Strainer clogged.	Check strainer and clean if necessary.
PUMP STOPS OR FAILS TO DELIVER RATED FLOW OR PRESSURE	Air leak in suction line.	Correct leak.
	Suction intake not submerged at proper level or sump too small.	Check installation and correct as needed.Check submergence chart (Section B).
	Lining of suction hose collapsed.	Replace suction hose.
	Impeller or other wearing parts worn or damaged.	Replace worn or damaged parts. Check that impeller is properly centered and rotates freely.

TROUBLE	POSSIBLE CAUSE	PROBABLE REMEDY
PUMP STOPS OR FAILS TO DELIVER RATED FLOW OR PRESSURE(cont.)	Impeller clogged.	Free impeller of debris.
	Pump speed too slow.	Check engine output; consult engine operation manual.
	Suction lift or discharge head too high.	Check piping installation and install bypass line if needed. See INSTALLATION.
	Leaking or worn seal or pump gasket.	Check pump vacuum. Replace leaking or worn seal or gasket.
	Strainer clogged.	Check strainer and clean if necessary.
PUMP REQUIRES TOO MUCH POWER	Pump speed too high.	Check engine output.
	Discharge head too low.	Adjust discharge valve.
	Liquid solution too thick.	Dilute if possible.
PUMP CLOGS FREQUENTLY	Discharge flow too slow.	Open discharge valve fully to increase flow rate, and run engine at maximum governed speed.
	Suction check valve or foot valve clogged or binding.	Clean valve.
	Discharge line clogged or restricted; hose kinked.	Check discharge lines; straighten hose.
EXCESSIVE NOISE	Cavitation in pump.	Reduce suction lift and/or friction losses in suction line.
	Pumping entrained air.	Locate and eliminate source of air bubble.
	Pump or drive not securely mounted.	Secure mounting hardware.
	Impeller clogged or damaged.	Clean out debris; replace damaged parts.

TROUBLE	POSSIBLE CAUSE	PROBABLE REMEDY
BEARINGS RUN TOO HOT	Bearing temperature is high, but within limits.	Check bearing temperature regularly to monitor any increase.
	Low or incorrect lubricant.	Check for proper type and level of lubricant.
	Suction and discharge lines not properly supported.	Check piping installation for proper support.
	Drive misaligned.	Align drive properly.

PUMP MAINTENANCE AND REPAIR - SECTION E

MAINTENANCE AND REPAIR OF THE WEARING PARTS OF THE PUMP WILL MAINTAIN PEAK OPERATING PERFORMANCE.

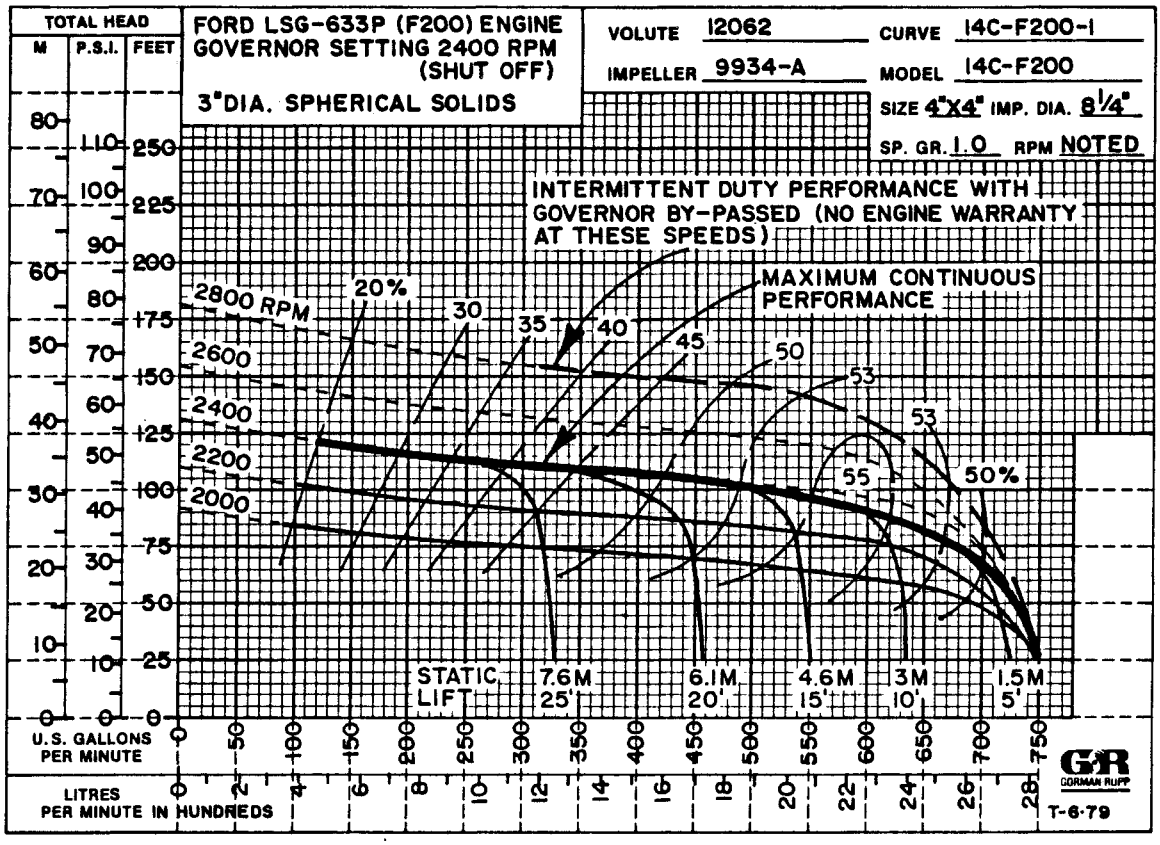

*STANDARD PERFORMANCE FOR PUMP MODEL 14C20-F200

*Based on 70°F clear water at sea level with minimum suction lift. Since pump installations are seldom identical, your performance may be different due to such factors as viscosity, specific gravity, elevation, temperature, and impeller trim.

If your pump serial number is followed by an "N", your pump is **NOT** a standard production model. Contact the Gorman-Rupp Company to verify performance or part numbers.

CAUTION

Pump speed and operating condition points must be within the continuous performance range shown on the curve. See Section E, Page 1.

SECTIONAL DRAWING

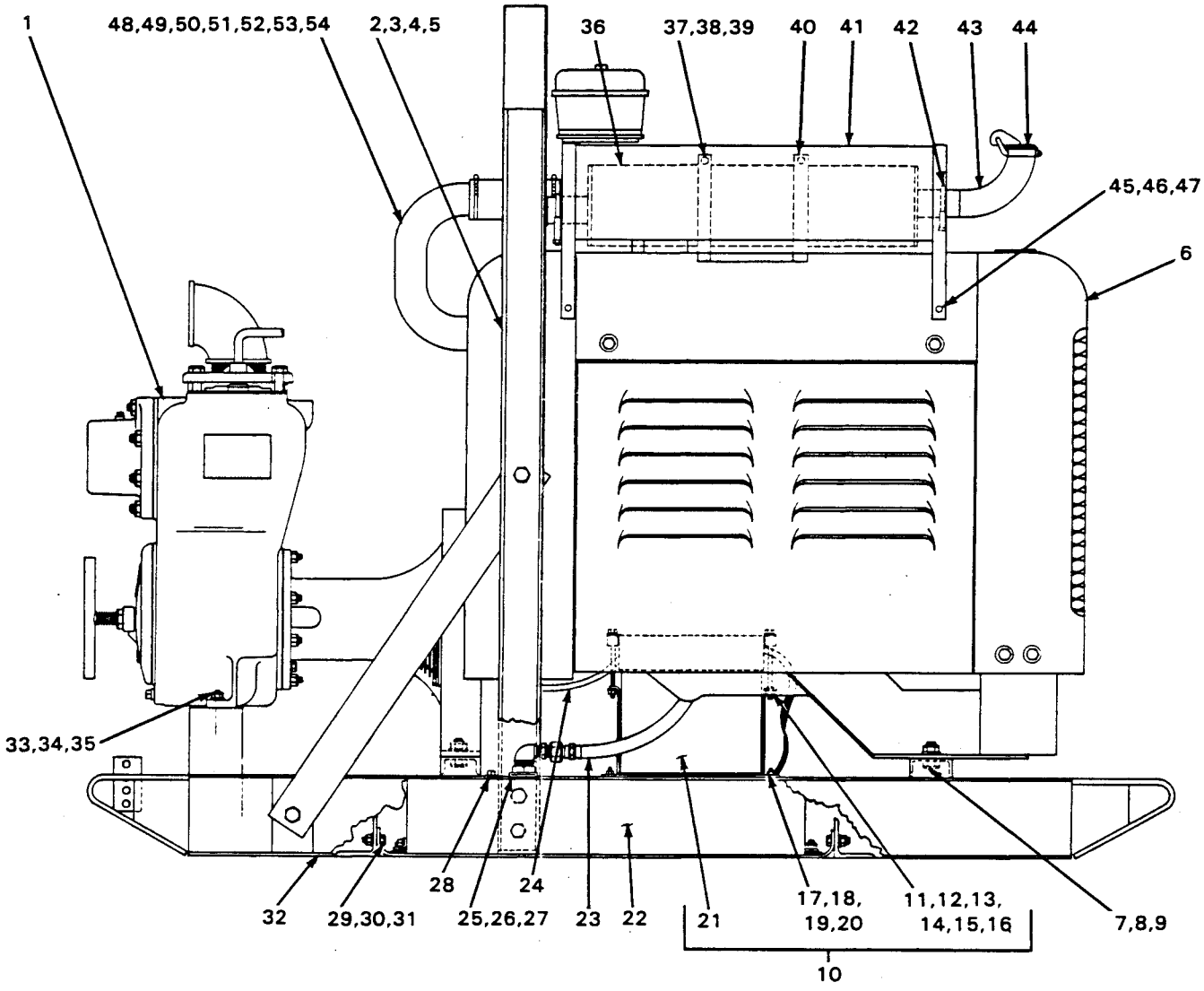

Figure 1. Pump Model 14C20-F200

PARTS LIST
Pump Model 14C20-F200
(From S/N 806367 up)

ITEM NO.	PART NAME	PART NUMBER	MATL CODE	QTY
1	PUMP END ASSY	14C20	-----	1
2	HOISTING BAIL	13351-N	24000	1
3	HEX HD CAPSCREW	B01006	15991	8
4	LOCKWASHER	J00010	15991	8
5	HEX NUT	D00010	15991	8
6	FORD LSG-633P ENG	29118-181	-----	1
7	HEX HD CAPSCREW	B00805	15991	4
8	HEX NUT	D00008	15991	4
9	LOCKWASHER	J00008	15991	4
10	BATTERY BOX ASSY	GRP40-02	-----	1
11	-BATTERY FRAME	8355-B	24000	1
12	-BATTERY BOX	8356-B	24000	1
13	-HEX HD CAPSCREW	B00612	15991	2
14	-HEX NUT	D00006	15991	2
15	-LOCKWASHER	J00006	15991	2
16	-FLAT WASHER	K00006	15991	2
17 *	-GRD CABLE ASSY	5795-AC	24040	1
18	-HEX HD CAPSCREW	B00604	15991	2
19	-HEX NUT	D00006	15991	2
20	-LOCKWASHER	J00006	15991	2
21 *	-BATTERY 12-VOLT	S01338	-----	1
22	FUEL TANK AND GUARD ASSEMBLY	46711-033	-----	1
	-GUARD ASSY	42381-017	24150	1
	-FUEL TANK	46711-034	24150	1
23	*FUEL LINE ASSY	12618-F	-----	1
24	*CABLE ASSY	6926-Z	24040	1
25	FUEL OUT ASSY	10765	24030	1
26	REDUCER ELBOW	Q00604	11990	1
27	CONNECTOR	S01344	-----	1
28	PIPE PLUG	P00008	11990	1
29	HEX HD CAPSCREW	B00604	15991	10
30	LOCKWASHER	J00006	15991	10
31	HEX NUT	D00006	15991	10
32	COMB BASE	41566-589	24150	1
33	HEX HD CAPSCREW	B00807	15991	2
34	HEX NUT	D00008	15991	2
35	LOCKWASHER	J00008	15991	2
36	MUFFLER	29334-119	-----	1
37	HEX HD CAPSCREW	B00505	15991	2
38	LOCKWASHER	J00005	15991	2
39	HEX NUT	D00005	15991	2
40	SADDLE	13692	24000	1
41	MUFFLER GRD ASSY	42331-014	24150	1
42	MUFFLER CLAMP	S0933	-----	2
43	EXHAUST ELBOW	29334-332	-----	1
44	WEATHER CAP	S01246	-----	1
45	HEX HD CAPSCREW	B00503	15991	6
46	LOCKWASHER	J00005	15991	6
47	HEX NUT	D00005	15991	6
48	*AIR CLEANER HOSE	31417-044	19190	1
49	HOSE CLAMP	26518-671	-----	4
50	*AIR CLEANER HOSE	31417-045	19190	1
51	AIR CLEANER PIPE	31921-025	15990	1
52	WELL NUT	21757-036	-----	4
53	HEX HD CAPSCREW	B00405	15991	4
54	FLAT WASHER	K00004	15991	4
NOT SHOWN:				
	BATTERY TAG	6588-S	00000	1
OPTIONAL:				
	WHEEL KIT	GRP30-30	-----	1

*INDICATES PARTS RECOMMENDED FOR STOCK

Above Serial Numbers Do Not Apply To Pumps Made In Canada.

CANADIAN SERIAL NO ..... AND UP

SECTIONAL DRAWING

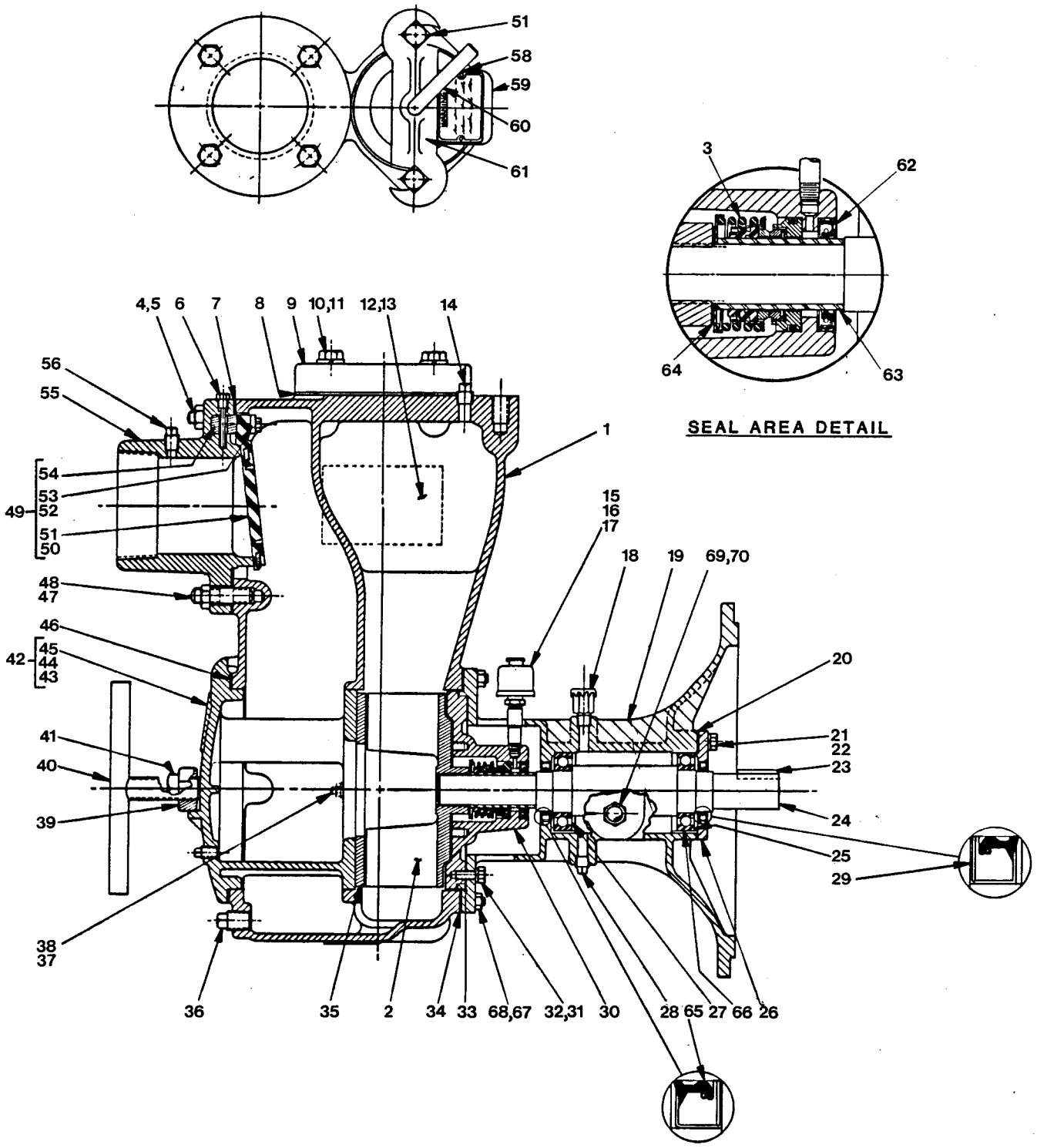

Figure 2. Pump End Assy 14C20-F200

PARTS LIST
Pump End Assy 14C20-F200

ITEM NO.	PART NAME	PART NUMBER	MATL CODE	QTY
1	PUMP CASING	12062	10010	1
2	*IMPELLER	9934-A	11000	1
3	*GREASE SEAL ASSY	12364-D	-----	1
4	STUD	C01011	15991	2
5	HEX NUT	D00010	15991	2
6	CHECK VLV PIN	11557	17010	1
7	*SUCT FLANGE GSKT	11389-G	21020	1
8	*DISCH FLANGE GSKT	1674-G	18000	1
9	DISCH FLANGE	271	10010	1
10	HEX HD CAPSCREW	B01008	15991	4
11	LOCKWASHER	J00010	15991	4
12	NAME PLATE	2613-D	13990	1
13	DRIVE SCREW	BM#04-03	15990	4
14	PIPE PLUG	P00004	11990	1
15	HVY PIPE NIPPLE	T00206	15070	1
16	PIPE COUPLING	AE00004	11990	1
17	BOTTLE OILER	S01933	-----	1
18	AIR VENT	S01703	-----	1
19	INTERMEDIATE	38263-617	10010	1
20	GASKET	6404-G	18000	1
21	HEX HD CAPSCREW	B00604	15991	4
22	LOCKWASHER	J00006	15991	4
23	*IMPELLER SHAFT KEY	N00607	15990	1
24	IMP SHAFT	38514-809	15010	1
25	*ADJ SHIM SET	48261-037	-----	1
26	BEARING CAP	38324-408	10010	1
27	*BALL BEARING	23251-209	-----	1
28	PIPE PLUG	P00006	11990	1
29	*OIL SEAL	24258-575	-----	1
30	SEAL PLATE	38272-223	-----	1
31	HEX HD CAPSCREW	B00604	15991	4
32	LOCKWASHER	J00006	15991	4
33	*SEAL PLATE GSKT	6568	18000	1
34	*CASING GSKT SET	2474-G	18000	1
35	*WEAR PLATE ASSY	12068	15990	1
36	PIPE PLUG	P00008	11990	1
37	LOCKWASHER	J00006	15991	2
38	HEX NUT	D00006	15991	2
39	COVER PLATE CLAMP	12064	11000	1
40	COVER PLATE SCREW	2536	24000	1
41	MACHINE BOLT	A01012	15991	2
42	*BACK COVER PLATE ASSY	42111-929	-----	1
43	-WARNING PLATE	2613-EV	13990	1
44	-BACK COVER PLATE	NOT AVAILABLE		1
45	-PIPE PLUG	P00004	11990	1
46	*BACK COVER GSKT	2527-G	19090	1
47	STUD	C01010	15991	6
48	HEX NUT	D00010	15991	6
49	*CHECK VALVE ASSY	46411-062	-----	1
50	-MLD CHECK VALVE	NOT AVAILABLE		1
51	-SLEEVE	NOT AVAILABLE		1
52	-BACKUP PLATE	NOT AVAILABLE		1
53	-NYLOCK CAPSCREW	NOT AVAILABLE		1
54	-ADAPTOR	NOT AVAILABLE		1
55	SUCTION FLANGE	12065	10010	1
56	PIPE PLUG	P00004	11990	1
57	MACHINE BOLT	A01014	15991	2
58	*FILL COVER GSKT	50-G	19210	1
59	*FILL COVER PLATE ASSY	42111-344	-----	1
60	CLAMP BAR SCREW	31912-009	15000	1
61	CLAMP BAR	38111-004	11000	1
62	*OIL SEAL	S00506	-----	1
63	*SHAFT SLEEVE	5128	17030	1
64	*IMP ADJ SHIM SET	37-J	17090	REF
65	*OIL SEAL	25258-575	-----	1
66	*BALL BEARING	23251-209	-----	1
67	STUD	C00606	15991	8
68	HEX NUT	D00006	15991	8
69	PIPE PLUG	P00012	11990	1
70	SIGHT GAUGE	S01471	-----	1
NOT SHOWN:				
	DISCH ELBOW	R00064	11990	1
	WARNING DECAL	38816-096	-----	1
	STRAINER	2690-C	24000	1
	DISCH NIPPLE	T00064	15070	1

*INDICATES PARTS RECOMMENDED FOR STOCK

SECTIONAL DRAWING

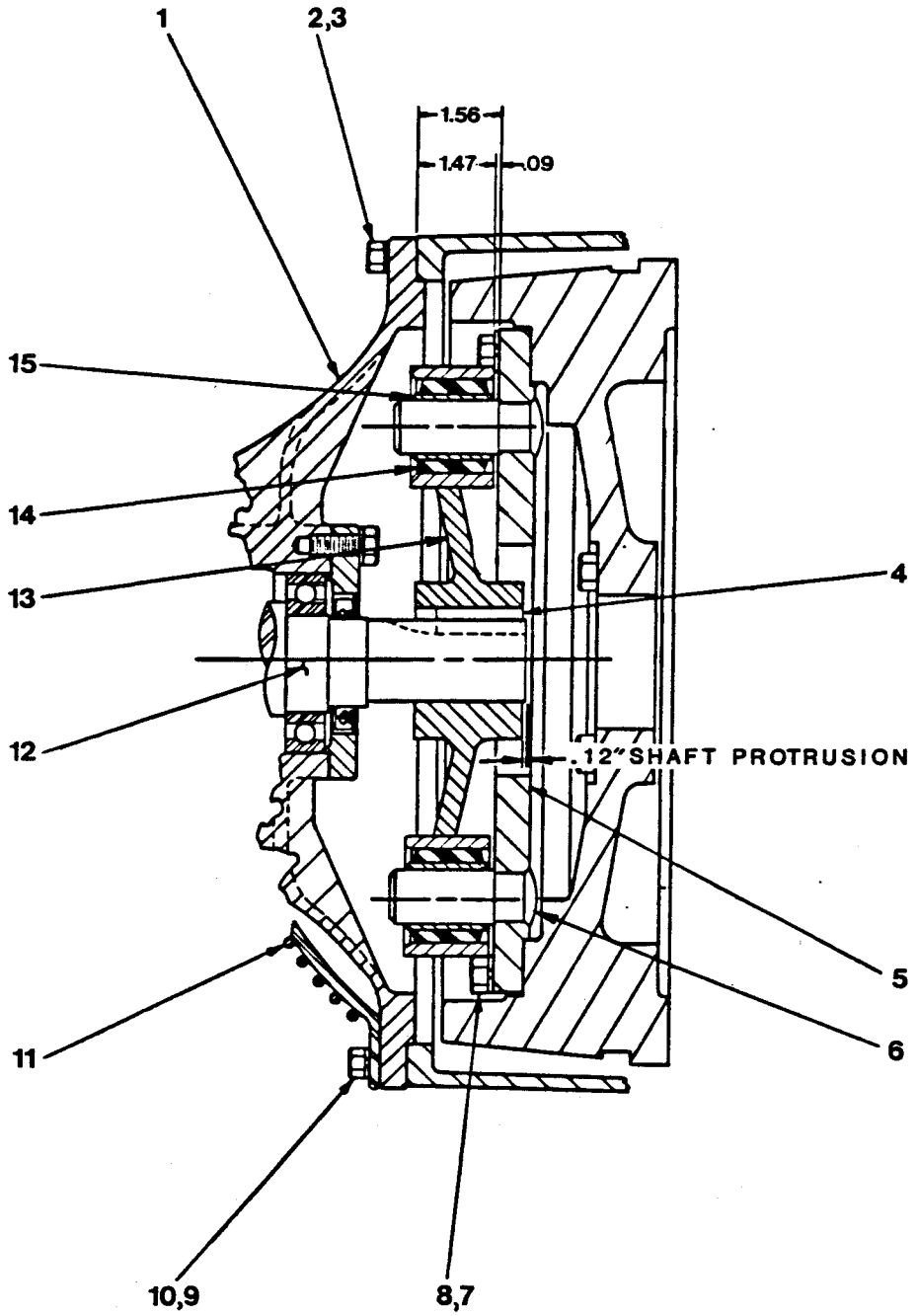

Figure 3. Drive Assembly For Pump Model 14C20-F200

PARTS LIST
Drive Assembly For Pump Model 14C20-F200

ITEM NO.		PART NAME	PART NUMBER	MATL CODE	QTY
1		INTERMEDIATE	38263-617	-----	1
2		HEX HD CAPSCREW	B00605	15991	8
3		LOCKWASHER	J00006	15991	8
4		IMPELLER SHAFT KEY	N00607	15990	REF
5		DRIVE PLATE ASSY	44131-005	24150	1
6	*	-DRIVE PIN	13819	15030	2
7		HEX HD CAPSCREW	B00605	15991	8
8		LOCKWASHER	J00006	15991	8
9		LOCKWASHER	J00006	15991	4
10		HEX HD CAPSCREW	B00606	15991	4
11		INTERMEDIATE GUARD	42381-038	24150	REF
12		IMPELLER SHAFT	38514-809	15010	REF
13		DRIVE ARM ASSEMBLY	13817-B	-----	1
14	*	-DYNA FLEX JOINT	S02110	-----	2
15		-SLEEVE	NOT AVAILABLE	-----	2

*INDICATES PARTS RECOMMENDED FOR STOCK

PUMP AND SEAL DISASSEMBLY AND REASSEMBLY

This pump requires little service due to its rugged, minimum-maintenance design. However, if it becomes necessary to inspect or replace the wearing parts, follow these instructions which are keyed to the sectional views (see figure 1, 2 and 3) and the accompanying parts lists.

Most service functions may be performed by draining the pump and removing the back cover assembly. If major repair is required, the piping and/or engine must be disconnected.

Before attempting to service the pump, take precautions to ensure that the engine will remain inoperative. Close all connecting valves.

WARNING

Before attempting to open or service the pump:

1. Familiarize yourself with this manual.
2. Remove the key from the engine ignition to ensure that the pump will remain inoperative.
3. Allow the pump to cool if overheated.
4. Vent the pump slowly and cautiously.
5. Close the suction and discharge valves.
6. Check the temperature before opening any covers, plates, or plugs.
7. Drain the pump.

WARNING

Use lifting and moving equipment in good repair and with adequate capacity to prevent injuries to personnel or damage to equipment.

Back Cover Removal

(Figure 2)

The impeller, wear plate, check valve, and seal assembly can be serviced after the back cover assembly (42) has been removed.

Before removing the assembly, remove the pump casing drain plug (36) and drain the pump. Clean and reinstall the drain plug.

Loosen the cover clamp screw (40) and clamp bar (39) securing the back cover. Pull the back cover and assembled wear plate (35) from the pump casing (1).

Suction Check Valve Removal

(Figure 2)

After the back cover assembly has been removed, reach through the opening and hold the check valve assembly (49) in place while removing the check valve pin (6). Slide the assembly out of the suction port and remove it.

NOTE

If the check valve assembly or any components require replacement, the complete assembly must be replaced. Individual parts are not sold separately.

The check valve assembly may also be serviced by removing the suction flange (55). Remove the hex nuts (5 and 48) securing the suction flange to the pump casing, and pull the flange and assembled check valve from the suction port. Remove the check valve pin (6), and remove the check valve.

Inspect the suction flange gasket (7) for wear or damage, and replace as required.

Impeller Removal

(Figure 2)

To loosen the impeller (2), tap the vanes in a counterclockwise direction (when facing impeller) with a block of wood or a soft-faced mallet. Unscrew the impeller and replace it if cracked or badly worn. Use caution when removing the impeller; tension on the seal spring will be released as the impeller is unscrewed.

Slide the impeller adjusting shims (64) from the impeller shaft. For ease of reassembly, tag and tie the shims, or measure and record their thickness.

Seal Disassembly

(Figure 2)

Remove the spring centering washer and the seal spring. Carefully remove the remainder of the seal components, using a stiff wire with a hooked end if necessary.

Remove the shaft sleeve (63).

If no further disassembly is required, see **Seal Reassembly**.

Pump Disassembly

(Figure 2)

To service the seal plate, intermediate, bearings, or drive assembly, the pump end must be removed from the base. See Figure 1, and remove the hardware (33, 34, and 35) securing the pump casing to the base.

Remove the hex nuts (68) securing the pump casing (1) to the intermediate (19), and remove the pump casing. If shims have been used under the mounting feet to level the pump casing, tag and tie these shims. Remove the oil cup and piping (15, 16, and 17) from the seal plate (30).

Remove the hardware (31 and 32) securing the seal plate to the intermediate (19), and remove the seal plate and seal plate gasket (33).

Remove the oil seal (62).

Separating Intermediate And Drive Assembly From Engine

(Figure 3)

If necessary to separate the intermediate and drive assemblies from the engine, support the intermediate using a hoist and sling, and remove the capscrews (2 and 9) and lockwashers (3 and 8) securing the intermediate (1) and intermediate guards (10) to the engine bellhousing. Separate the assemblies by pulling the intermediate straight away from the engine.

As the assemblies are separated, the drive pins (14) will disengage from the drive arm assembly (12). The drive arm assembly and the impeller shaft key (4) are a tight press fit on the shaft (11), and will remain on the shaft.

It is not necessary to remove the drive plate assembly (5) from the engine flywheel unless the drive pins are bent or worn and must be replaced. To remove the drive plate assembly, remove the hardware (6 and 7) securing the assembly to the engine flywheel, and remove the drive plate.

Use a bearing puller to remove the drive arm assembly from the impeller shaft. Remove the shaft key.

Inspect the dyna flex joints (13), and replace them if worn. The dyna flex joints are a press fit in the drive arm.

Impeller Shaft And Bearing Disassembly

(Figure 2)

When the pump is properly operated and maintained, the intermediate should not require disassembly. Disassemble the shaft and bearings **only** when there is evidence of wear or damage.

CAUTION

> Shaft and bearing disassembly in the field is not recommended. These operations should be performed only in a properly-equipped shop by qualified personnel.

Drain the bearing lubricant by removing the intermediate drain plug (28). Clean and reinstall the drain plug.

Remove the hardware (21 and 22) securing the bearing cap (26) to the intermediate (19), and remove the bearing cap , gasket (20), outboard oil seal (29), and bearing shim set (25). Tag and tie the bearing shims, or measure and record their thickness.

Place a block of wood against the impeller end of the shaft (24), and drive the shaft and assembled bearings out of the intermediate. Remove the inboard oil seal (65) from the intermediate. The inboard bearing should come free with the shaft. If it does not, press it out of the intermediate bore with an arbor (or hydraulic) press.

Use a bearing puller to remove the inboard and outboard bearings (66 and 27) from the impeller shaft.

Impeller Shaft And Bearing Reassembly

(Figure 2)

Clean the bore of the intermediate, all component parts, and the impeller shaft with a soft cloth soaked in cleaning solvent. Inspect the parts for wear, and replace as necessary.

WARNING

Most cleaning solvents are toxic and flammable. Use them only in a well-ventilated area free from excessive heat, sparks, and flame. Read and follow all precautions printed on solvent containers.

Inspect the shaft for damaged threads, distortion, or nicks and scratches. Dress small nicks and burrs with a fine file or honing stone. Replace the impeller shaft if severely damaged.

To prevent contamination, wash the bearings separately in fresh cleaning solvent. Dry the bearings with filtered compressed air and coat with light oil for ease of reassembly.

Rotate the bearings by hand to check for roughness or binding. If rotation is rough, replace the bearings.

CAUTION

> Bearings must be kept free of all dirt and foreign material. Failure to do so will greatly shorten bearing life. DO NOT spin dry bearings. This may scratch the rollers or races and cause premature bearing failure.

The bearing tolerances provide a light press fit onto the impeller shaft, and snug fit into the pedestal. If the bearings slip on and off easily, the shaft is worn and must be replaced. The pedestal must be replaced if the bearings do not fit snugly.

Dip the bearings in clean oil and then position them on the shaft with the loading grooves facing away from the impeller. Using an arbor press, press against the inner races until the bearings seat squarely against the shaft shoulders.

CAUTION

> When installing the bearings onto the shaft, NEVER press or hit against the outer race, balls, or ball cage. Press ONLY on the inner race.

Slide the shaft and assembled bearings into the entermediate bore until the inboard bearing (27) bottoms against the bore shoulder.

CAUTION

> When installing the shaft and bearings into the pedestal, push against the outer race. NEVER hit the balls or ball cage.

Install the same thickness of bearing shims as previously removed.

NOTE

> The shaft end play should be between .002 to .010 inch. Add or subtract shims (25) until within specified limits.

Install a new bearing cap gasket (20) and secure the bearing cap (26) to the intermediate.

Install new outboard and inboard oil seals (29 and 65) with the lips positioned as shown in Figure 2.

Lubricate the bearings as indicated in **LUBRICATION** at the end of Section E.

Securing Intermediate And Drive Assembly To Engine

(Figure 3)

Secure the drive plate assembly to the engine flywheel. If the drive pins were removed from the drive plate assembly, install new pins by pressing them into the drive plate and peening the ends.

Install the impeller shaft key and press the drive arm assembly on the impeller shaft.

CAUTION

> Make certain that the drive plate and drive arm assemblies are mounted in accordance with the dimensions shown in Figure 3. If the drive assembly is not properly positioned on the impeller shaft, a preload condition can occur and cause premature thrust bearing failure.

Align the drive arm assembly so that the drive pins will engage the dyna flex joints, and secure the intermediate and intermediate guards to the engine bellhousing.

Seal Plate Reassembly

(Figure 2)

Check the oil seal (62), and replace it if cracked or worn. Install the oil seal in the outboard bore of the seal plate.

Install a new seal plate gasket (33) and secure the seal plate to the intermediate using the attaching hardware (31 and 32). Reinstall the oil cup and piping (15, 16, and 17).

NOTE

> It is recommended that the seal and impeller be reassembled at this time. It is best to adjust the back impeller clearance before installing the pump casing. See **Impeller Reassembly And Adjustment.**

Install the same thickness of pump casing gaskets (34) as previously removed from the pump casing studs and secure the pump casing to the intermediate. Be sure to reinstall any leveling shims used under the pump casing mounting feet before installing the base mounting hardware.

NOTE

The front impeller clearance must be adjusted after pump casing and back cover are fully reassembled by adding or subtracting pump casing gaskets (34). Do not secure the pump casing to the base until this operation is done.

Seal Reassembly

(Figure 2 and 4)

Clean the seal cavity and shaft with a cloth soaked in fresh cleaning solvent.

WARNING

Most cleaning solvents are toxic and flammable. Use them only in a well-ventilated area free from excessive heat, sparks, and flame. Read and follow all precautions printed on solvent containers.

The seal is not normally reused since any damage to the precision finished faces could result in premature seal failure. If it is necessary to reuse an old seal in an emergency, **carefully** wash all metallic parts in fresh cleaning solvent and allow to dry thoroughly.

Inspect the seal components for wear, scoring, grooves or other damage which might cause leakage. If any components are worn, replace the complete seal. **Never mix old and new seal parts.** Handle the seal parts with extreme care to prevent damage. Be careful not to contaminate the precision finished faces, even finger prints on the faces can shorten seal life.

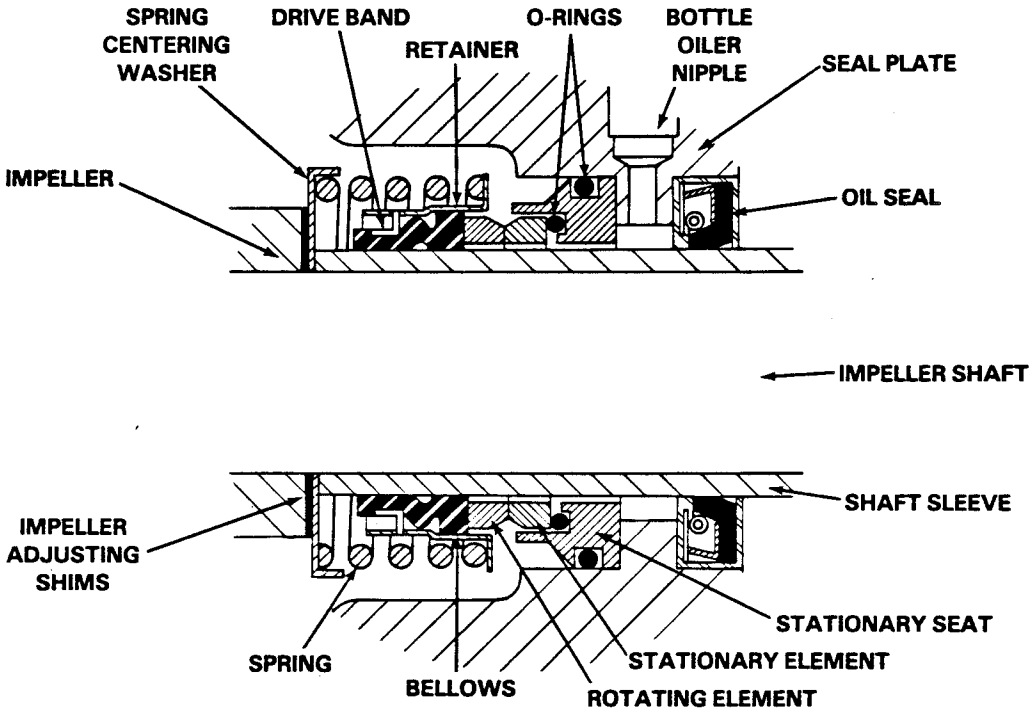

Figure 4. 12364-D Seal Assembly

Clean and polish the shaft sleeve to remove small scratches and nicks. Replace it if badly worn. **Do not** install at this time.

Lubricate the stationary seat O-rings with water or a very **small** amount of light oil and install them in the stationary seat. Press this assembly squarely into the seal plate bore. Be careful not to damage the seal face.

Lubricate the shaft sleeve with water or a very **small** amount of light oil and subassemble the seal parts as shown in Figure 4. The rotating seal element must be **just flush** with the chamfered end of the shaft sleeve.

Apply a drop of light oil on each of the precision seal faces, **never** use grease. Install the sleeve and subassembled seal onto the shaft. Push the sleeve through the seal until the undercut end seats against the shaft shoulder.

Install the spring and centering washer.

After the impeller has been installed, lubricate the seal assembly as indicated in **LUBRICATION**.

Impeller Reassembly And Adjustment

(Figure 2)

Inspect the impeller, and replace it if cracked or badly worn.

Slide the same number of impeller adjusting shims (64) as previously removed onto the shaft and screw the impeller on until tight.

A clearance of .020 to .040 inch between the impeller and the seal plate is necessary for maximum pump efficiency. Measure this clearance, and add or remove impeller shims until it is reached.

NOTE

If the pump has been completely disassembled, install a new pump casing gasket set and secure the pump casing to the intermediate at this time.

A clearance of .010 to .020 inch between the impeller and the wear plate is also recommended for maximum pump efficiency. This clearance must be set after installing the back cover, by adding or removing gaskets in the pump casing gasket set until the impeller binds against the wear plate when the shaft is turned. After the impeller binds, add .015 inch of gaskets.

NOTE

An alternate method of adjusting this clearance is to reach through the discharge port with a feeler gauge and measure the gap. Add or subtract pump casing gaskets accordingly.

Suction Check Valve Installation

Inspect the check valve assembly, and replace it if badly worn.

NOTE

The check valve assembly must be replaced as a complete unit. Individual parts are not sold separately.

Reach through the back cover opening with the assembled check valve and position the check valve adaptor into the mounting slot in the suction flange. Align the adaptor with the flange hole and secure the assembly with the check valve pin (6).

NOTE

If the suction or discharge flange was removed, replace the respective gaskets and apply "Permatex Aviation #3 Form-A-Gasket" or equivalent to the mating surfaces.

Back Cover Installation

(Figure 2)

Inspect the wear plate (35) and replace it if badly worn or grooved. To remove the wear plate, disengage the hardware (37 and 38).

Clean any scale or debris from the back cover shoulder and pump casing which might prevent a good seal. Replace the back cover gasket (46) and slide the back cover assembly into the pump casing. Be sure the wear plate does not bind against the pump casing.

NOTE

To ease future disassembly, apply a film of grease or 'Never-Seez' on the back cover shoulder, or any surface which contacts the pump casing. This action will reduce rust and scale build-up.

Secure the back cover assembly by installing the clamp bar and tightening the cover clamp screw. **Do not** over tighten the clamp screw; it should be just tight enough to ensure a good seal at the back cover shoulder.

Final Pump Reassembly

(Figure 1)

Be sure the pump is secured to the base and engine.

Install the suction and discharge lines, and open all valves. Make certain that all piping connections are secure.

Be sure the pump end and engine have been properly lubricated, see **LUBRICATION**.

Fill the pump casing with clean liquid. Reinstall the fill cover plate and tighten it.

Refer to **OPERATION**, Section C, and start the pump.

LUBRICATION

Seal Assembly

Refer to Figure 2, and fill the bottle oiler (17) with SAE No. 30 non-detergent oil. Check the oil level regularly and keep the bottle oiler full.

Bearings

The bearing housing was fully lubricated when shipped from the factory. Check the oil level regularly through the sight gauge (70, Figure 2) and maintain it at the mid-point of the gauge. When lubrication is required, remove the air vent (18, Figure 2) and add S.A.E. #30 non-detergent oil.

NOTE

The white reflector in the sight gauge must be positioned horizontally to provide proper drainage.

Under normal operating conditions, drain and refill the bearing housing once each year with clean oil. **Do not** over lubricate. Excessive oil could cause preloading and over-heating of the bearings.

For cold weather operation, consult the factory or a lubricant supplier for the recommended grade of oil.

Engine

Refer to the engine manufacturer's recommendations.

For U.S. and International Warranty Information,
Please Visit www.grpumps.com/warranty
or call:
U.S.: 419—755—1280
International: +1—419—755—1352

For Canadian Warranty Information,
Please Visit www.grcanada.com/warranty
or call:
519—631—2870

THE GORMAN-RUPP COMPANY • MANSFIELD, OHIO
GORMAN-RUPP OF CANADA LIMITED • ST. THOMAS, ONTARIO, CANADA