A C

OM-01300-OM02
FEBRUARY 10, 1986

S SERIES

INSTALLATION, OPERATION, PARTS LIST, AND MAINTENANCE MANUAL

MODEL

S3C18 575V 3P

THE GORMAN-RUPP COMPANY • MANSFIELD, OHIO
GORMAN-RUPP OF CANADA LIMITED • ST. THOMAS, ONTARIO, CANADA
Printed in U.S.A.

© Copyright by the Gorman-Rupp Company 1985

TABLE OF CONTENTS

INTRODUCTION I-1

WARNINGS - SECTION A A-1

INSTALLATION - SECTION B B-1
PREINSTALLATION INSPECTION B-1
Lubrication B-2
PUMP INSTALLATION B-2
Pump Specifications B-2
Pump Dimensions B-2
Lifting B-3
Positioning The Pump B-4
Piping B-5
CONTROL BOX INSTALLATION B-6
Enclosure B-6
Grounding Methods B-9
Field Wiring Connections (Incoming Power) B-10
Pump Power Cable Connections B-11
LIQUID LEVEL DEVICES B-12

OPERATION - SECTION C C-1
CONTROL BOX FUNCTION C-1
Component Function C-1
PUMP OPERATION C-2
Liquid Temperature And Overheating C-2
Checking Pump Rotation C-3
STARTING C-3
Standard Pump (No Liquid Level Devices) C-4
With Automatic Liquid Level Devices C-4
STOPPING C-4
Operation Checks C-5
Cold Weather Preservation C-5

TROUBLESHOOTING - SECTION D D-1
TROUBLESHOOTING CHART D-1
ELECTRICAL TESTING D-4
Test Equipment D-4
Motor And Motor Power Cable Continuity D-4
Insulation Resistance D-5

MAINTENANCE AND REPAIR - SECTION E E-1
PERFORMANCE CURVE E-1
PUMP MODEL - PARTS LIST E-3
PUMP AND MOTOR DISASSEMBLY AND REASSEMBLY E-4
PUMP END DISASSEMBLY E-5
Strainer Disassembly E-5
Draining Oil From Seal And Motor E-5
Positioning Pump For Disassembly E-5
Impeller Disassembly E-6
Lower Seal Disassembly E-6
Upper Seal Disassembly E-6
PUMP END REASSEMBLY E-7
Cleaning Old Parts E-7
Upper Seal Reassembly E-8
Lower Seal Reassembly E-9
Impeller Reassembly E-10
Strainer Reassembly E-11
MOTOR DISASSEMBLY E-11
Terminal Housing And Power Cable Disassembly E-12
Rotor Disassembly E-13
Stator Disassembly E-13

Relief Valve E-14
Hoisting Bail E-14
MOTOR REASSEMBLY E-14
Stator Reassembly E-14
Rotor Reassembly E-15
Terminal Housing And Power Cable Reassembly E-17
Power Cable Potting E-18
LUBRICATION E-21
Seal Cavity E-22
Motor Housing Cavity E-22
FINAL ASSEMBLY E-22

INTRODUCTION

This Installation, Operation, and Maintenance Manual is designed to help you achieve the best performance and longest life from your Gorman-Rupp pump.

This pump is designed to operate fully or partially submerged. It is capable of handling most nonvolatile and nonflammable liquids which are mildly corrosive and abrasive. The basic material of construction is aluminum, with bonded buna-n linings over the suction head and seal plate; the impeller, fastening hardware and pipe plugs are stainless steel. The integral electric motor must be operated through the control box furnished with the pump. Neither the pump motor nor control box are explosion proof and should not be operated in a hazardous atmosphere.

If there are any questions regarding the pump or motor which are not covered in this manual or in other literature accompanying this unit, please contact your Gorman-Rupp distributor or the Gorman-Rupp Company:

The Gorman-Rupp Company P.O. Box 1217 Mansfield, Ohio 44901-1217	or	Gorman-Rupp of Canada Limited 70 Burwell Road St. Thomas, Ontario N5P 3R7

The following are used to alert maintenance personnel to procedures which require special attention, to those which could damage equipment, and to those which could be dangerous to personnel:

NOTE

Instructions to aid in installation, operation, and maintenance or which clarify a procedure.

CAUTION

Instructions which must be followed to avoid causing damage to the product or other equipment incidental to the installation. These instructions describe the requirements and the possible damage which could result from failure to follow the procedures.

WARNING

These instructions must be followed to avoid causing injury or death to personnel, and describe the procedure required and the injury which could result from failure to follow the procedure.

WARNINGS - SECTION A

THESE WARNINGS APPLY TO THE "S-SERIES" SUBMERSIBLE MOTOR OPERATED PUMPS.

WARNING

Before attempting to open or service the pump:

1. Familiarize yourself with this manual.
2. Lock out the power supply to the control panel to ensure that the pump will remain inoperative.
3. Allow the pump to cool if overheated.
4. Close the discharge valve (if used).

WARNING

Do not attempt to pump volatile or flammable liquids for which this pump has not been designed.

WARNING

Before connecting any cable to the control box, be sure to ground the control box. See Figure 4 on page B-9 for suggested grounding methods.

WARNING

After the pump has been installed, make certain that the pump and all piping or hose connections are secure before operation.

WARNING

The pump motor is designed to be operated through the control box furnished with the pump. The control box provides overload protection and power control. Do not connect the pump motor directly to the incoming power lines.

WARNING

All electrical connections must be in accordance with the National Electric Code and all local codes. If there is a conflict between the instructions provided and N.E.C. specifications, N.E.C. specifications shall take precedence. All electrical equipment supplied with this pump was in conformance with N.E.C. requirements in effect on the date of manufacture. Failure to follow applicable specifications, or substitution of electrical parts not supplied or approved by the manufacturer, can result in severe injury or death.

WARNING

The electrical power used to operate this pump is high enough to cause injury or death. Make certain that the control box is grounded, and that the power supply is compatible with the motor phase and voltage, before connecting the power source. If the overload unit is tripped during pump operation, correct the problem before restarting the pump.

WARNING

Obtain the services of a qualified electrician to connect the electrical circuits, and to service the control box.

WARNING

Do not attempt to lift the pump by the motor power cable or the piping. Attach proper lifting equipment to the hoisting bail fitted to the pump.

INSTALLATION - SECTION B

This section is intended only to summarize recommended installation practices for the pump and control box. If there are any questions concerning your specific installation, contact your Gorman-Rupp distributor or the Gorman-Rupp Company.

Automatic liquid level devices are not furnished with the standard pump, but are available from Gorman-Rupp as options (see **Liquid Level Devices**, Section B); for information on installing and operating these devices, see the technical data accompanying that option.

PREINSTALLATION INSPECTION

The pump assembly and control box were inspected and tested before shipment from the factory. Before installation, check for damage which may have occurred during shipment. Check as follows:

a. Check the pump assembly for cracks, dents, damaged threads, and other obvious damage.

b. Check for and tighten loose attaching hardware. Since gaskets tend to shrink after drying, check for loose hardware at mating surfaces.

c. The standard pump is connected to the control box with 50 ft. (15,2m) of power cable. Inspect the cable for cuts or damage.

d. Check the control box for cracks, dents, and other obvious damage.

e. Check that all control box components are securely attached to their mounting surfaces, and that the electrical connections are tight and free of corrosion.

f. Compare the amperes, phase, voltage, and hertz indicated on the motor name plate to the ratings indicated for the control box.

g. Carefully read all tags, decals, and markings on the pump assembly and the control box, and perform all duties indicated.

h. Check the pump and motor for any oil leaks. An oil leak may indicate a cut O-ring or other damage.

i. If the pump and control box have been stored for more than 12 months, some of the components or lubricants may have exceeded their maximum shelf life. These **must be inspected or replaced** to insure maximum pump service.

If the maximum shelf life has been exceeded, or if anything appears to be abnormal, contact your Gorman-Rupp distributor or the factory to determine the repair or updating policy. **Do not** put the pump into service until appropriate action has been taken.

Lubrication

There are two lubrication cavities in this pump, both contain premium quality submersible pump oil. The motor housing cavity provides lubrication to the motor assembly and rotor shaft bearings. The intermediate cavity provides lubrication to the seal assembly.

There are two shaft seals in this pump. The lower seal prevents liquid from entering the intermediate cavity at the impeller end. The upper seal prevents oil leakage from the motor housing cavity and acts as back-up protection in the event of lower seal failure.

Both cavities are fully lubricated when the pump is shipped from the factory. Check lubrication levels before installing the pump (see LUBRICATION in MAINTENANCE AND REPAIR). An additional quart of oil has been provided with the pump to "top off" the oil cavities. If either oil level is abnormally low, determine the cause before putting the pump into service.

PUMP INSTALLATION

Pump Specifications

See Table 1 for the typical pump specifications and motor data.

Table 1. Pump Specifications

Model Number	Voltage/ Phase	Pump Horse-power	Motor Speed (RPM)	Full Load Amperes	No Load Amperes	Locked Rotor Amperes	Discharge Size (NPT)
S3C18	575/3	6	3450	9.2	4.8	40	3

Pump Dimensions

The standard pump is provided with a suction strainer to prevent large solids from clogging the impeller. On high discharge head applications, the strainer can be replaced with an optional staging adaptor to allow one pump to feed another.

See Figure 1 on page B-3 for the approximate physical dimensions of the pump.

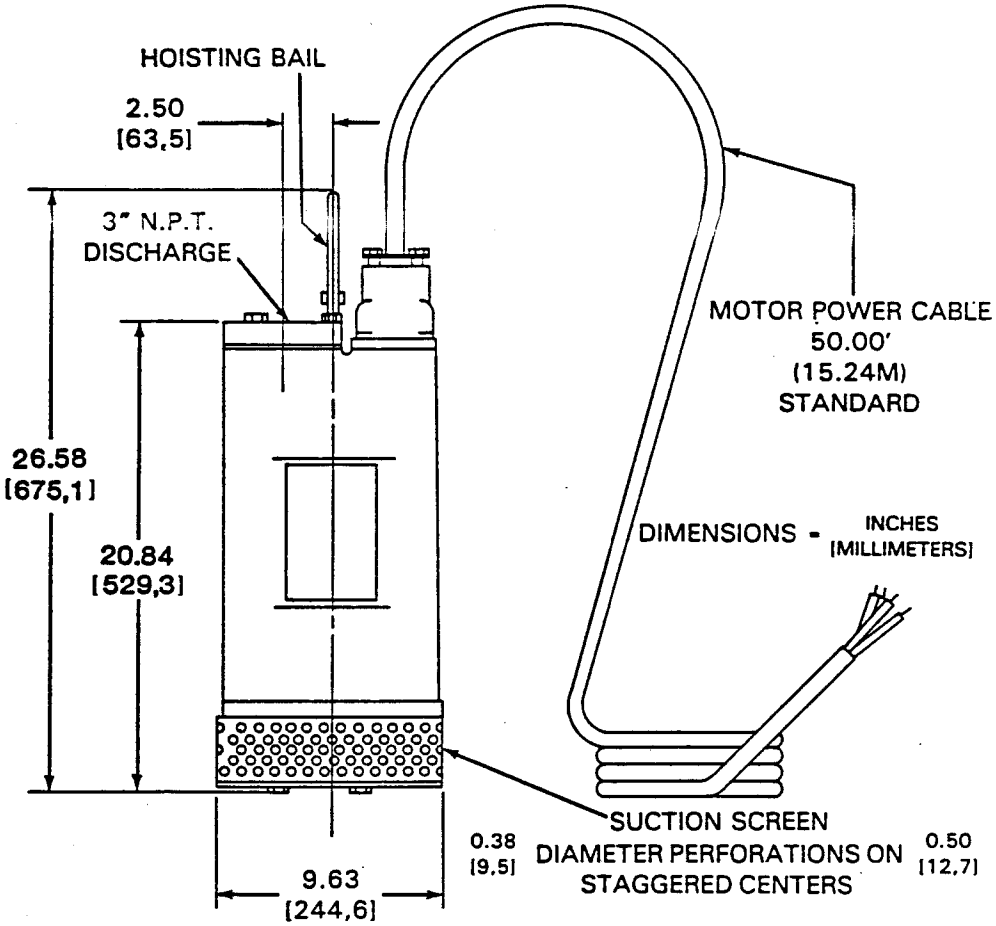

Figure 1. Pump Model S3C18-575V 3P

Lifting

Use lifting equipment with a capacity of at least **600 pounds**. This pump weighs approximately **120 pounds**, not including the weight of accessories and control box. Customer installed equipment such as rigid piping **must** be removed before attempting to lift.

WARNING

Do not attempt to lift the pump by the motor power cable or the piping. Attach proper lifting equipment to the hoisting bail fitted to the pump. If chains or cable are wrapped around the pump to lift it, make certain that they are positioned so as not to damage pump, and so that the load will be balanced.

Positioning The Pump

This pump is designed to operate fully or partially submerged. It may also be operated in air for extended periods. The rotating parts are oil lubricated, and the motor is cooled by a constant flow of liquid or air discharged through internal passage(s).

As a safe guard against rupture or explosion due to heat, the pump is fitted with a pressure relief valve which will open if vapor pressure within the pump motor reaches a critical point.

The pump will operate if positioned on its side, but this is not recommended because the motor torque could cause the pump to roll during operation.

The pump should be independently secured and supported by the hoisting bail. If the application involves a lot of debris, protect the pump from excessive wear and clogging by suspending it in a perforated barrel or culvert pipe. If the bottom is heavily sludge-covered, rest the pump on support blocks or suspend it from a raft or similar device near the surface of the liquid. See Figure 2 on page B-5 for typical pump installations.

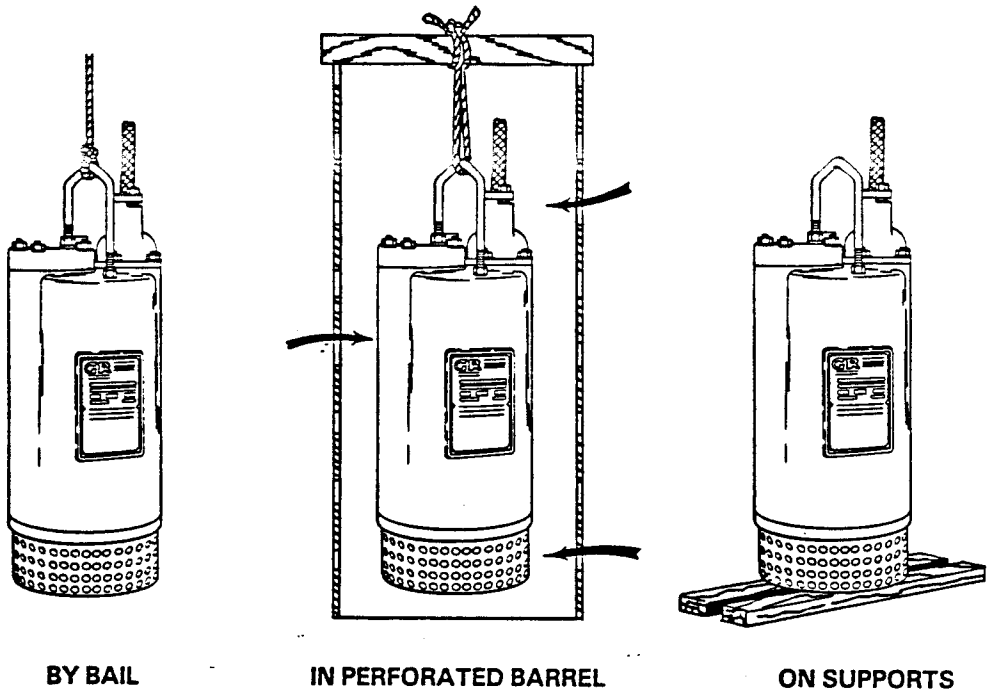

Figure 2. Typical Pump Installations.

All liquid entering the pump must pass through a strainer screen. Any spherical solids which pass through the screen will pass through the pump.

NOTE

Before actual operation, check the direction of impeller rotation to ensure that the pump is properly wired to the control box. See **Checking Pump Rotation** in **OPERATION** section.

Piping

No suction piping is required in a standard submerged application.

If an optional suction staging adaptor is installed, the discharge from one pump may be piped to the suction of another. To determine the size of the discharge connection, see Table 1, PUMP SPECIFICATIONS. Either hose or rigid pipe may be used. To facilitate mobility and maintenance, it is recommended that the discharge line be fitted with a quick disconnect fitting near the pump. The discharge line must be independently supported to avoid strain and vibration on the pump.

For maximum pumping capacity, keep the discharge as short and straight as possible. Minimize the use of elbows and fittings which increase friction losses through the discharge piping system.

It is recommended that a check valve or throttling valve be installed in the discharge line to control siphoning or back flow when the pump is shut off.

CONTROL BOX INSTALLATION

This pump is driven by an integral 575 VAC, 60 hertz, 3 phase, 6 HP motor. It is designed to operate through the control box furnished with the pump.

WARNING

The pump motor is designed to be operated through the control box furnished with the pump. The control box provides overload protection and power control. Do not connect the pump motor directly to the incoming power lines.

Enclosure

The control box is a rainproof enclosure with a padlockable front cover. **The enclosure is not designed to be watertight, and should not be submerged.** See Figure 3 on page B-7 for enclosure dimensions and callouts.

Secure the control box vertically on a level surface, which is above flood level. It should be easily accessible to the operator, and located close enough to the pump to avoid excessive voltage drop due to cable length. (See **Pump Power Cable Connections**). After the box is installed, make certain the front cover latches properly.

CAUTION

Failure to mount the control box vertically on a level surface may affect operation of the pump controls.

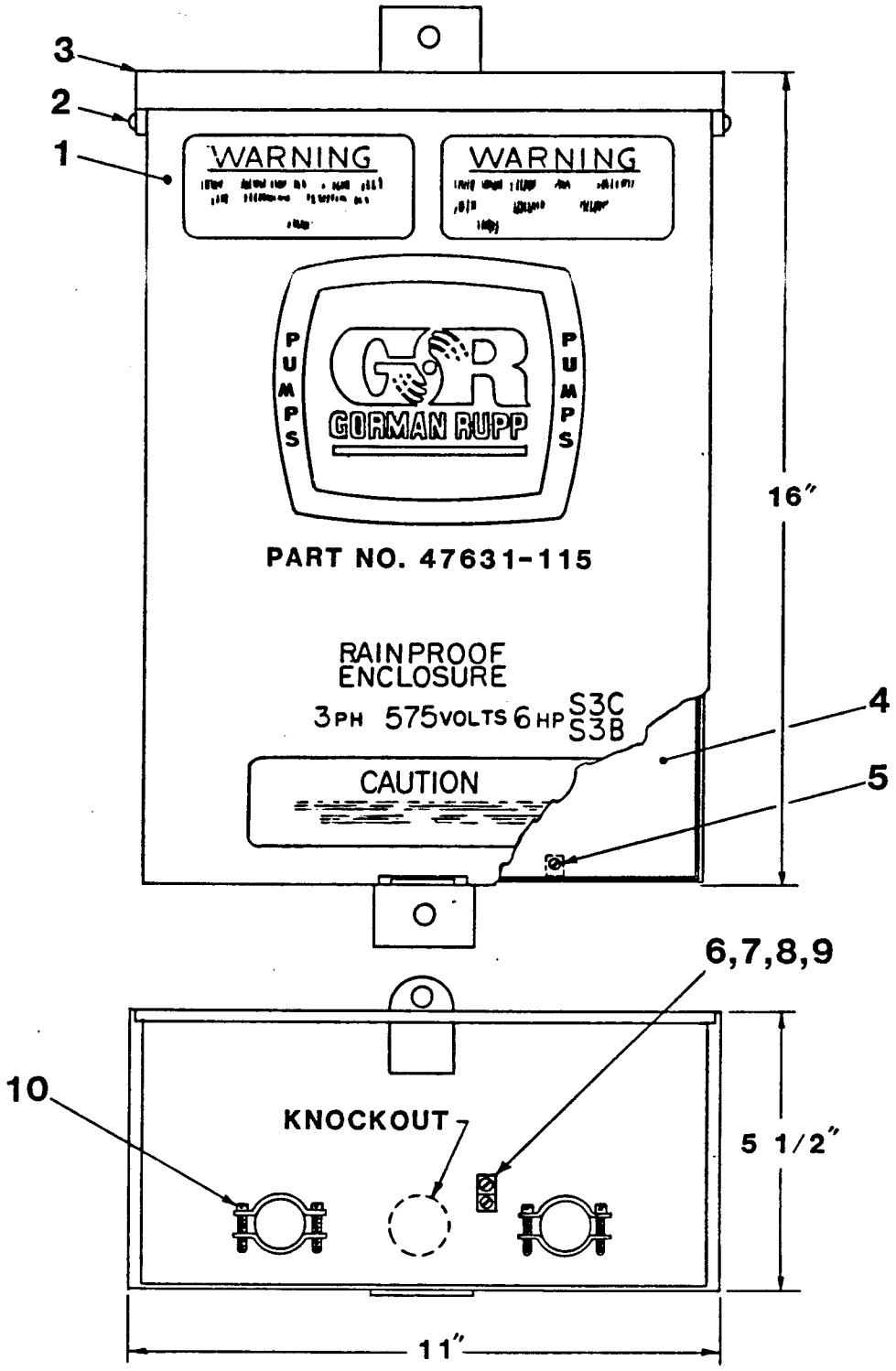

Figure 3. 47631-115 Control Box Assembly

PARTS LIST, EXTERNAL PARTS
47631-115 CONTROL BOX ASSEMBLY

See Figure 8 on page B-15 for internal parts.

ITEM NO.	PART NAME	PART NUMBER	MATL CODE	QTY
1	FRONT COVER	42821-098	-----	1
2	TUBULAR RIVET	21118-008	-----	2
3	ENCLOSURE	42821-063	-----	1
4	INNER PANEL	42821-070	-----	1
5	PHILLIP HD MACHINE SCREW	CF#802	15991	2
6	PHILLIP HD MACHINE SCREW	CF#802	15991	2
7	GROUND LUG	27222-002	-----	2
8	LOCKWASHER	AK#8	15991	2
9	HEX NUT	D#8	15991	1
10	CABLE CLAMP	27184-164	-----	2

Grounding Methods

Electrically ground the installation before connecting the field wiring to the control box. Install a grounding terminal to the enclosure and connect it to a properly imbedded electrode.

The material used for the electrode **must** be an excellent conductor of electricity, such as copper. If iron or steel is used, it must be galvanized or otherwise metal plated to resist corrosion. **Do not** coat the electrode with any material of poor conductivity such as paint or plastic.

The electrode must conform to the recommendations of N. E. C. Article 250. Follow all installation requirements of the N.E.C., and all applicable local codes. See Figure 4 for some suggested grounding methods.

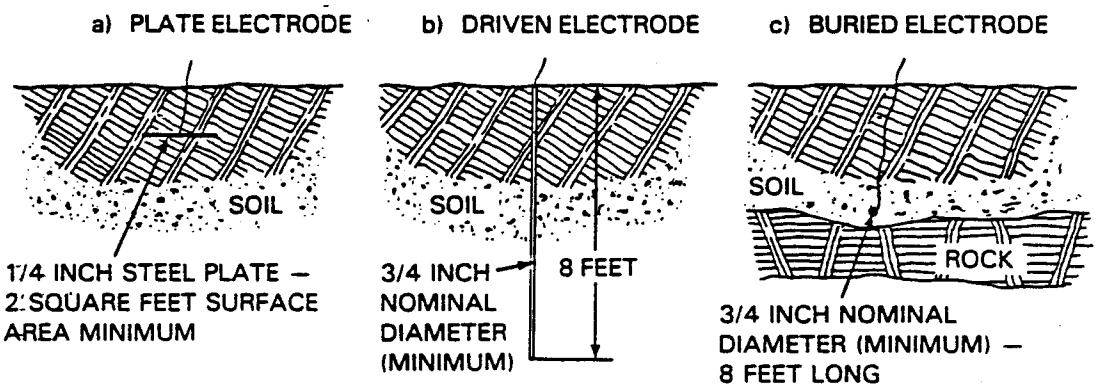

Figure 4. Suggested Grounding Methods

a. **Plate Electrode**: An iron or steel plate, 1/4 inch thick, completely imbedded in the ground. The plate must present a surface of a least 2 square feet.

b. **Driven Electrode**: A rod or pipe, 3/4 inch diameter minimum, 8 feet long, completely driven into the ground.

c. **Buried Electrode**: If rock or stone prevents imbedding the full 8 foot length of the ground rod, bury it in a horizontal trench.

   Space the ground rod or plates at least 6 feet from any other electrode or ground rod, such as those used for signal circuits, radio grounds, lightning rods, etc.

   The earth surrounding the ground rod or plate **must** contain enough moisture to make a good electrical connection. In dry or sandy areas, pour water around the rod or consult qualified personnel to devise a method of improving the connection.

WARNING

The electrical power used to operate this pump is high enough to cause injury or death. Make certain that the control box is properly grounded after installation.

Field Wiring Connections (Incoming Power)

WARNING

The electrical power used to operate this pump is high enough to cause injury or death. Obtain the services of a qualified electrician to make all electrical connections. Make certain that the pump and enclosure are properly grounded, and that the incoming power matches the requirements of the pump and control.

The pump control is designed to regulate a 575 volt, 3 phase, 60 hertz power supply. The field wiring must be properly sized to insure an adequate voltage supply. The voltage available **at the motor** must be within the range indicated in Table 2.

To calculate the voltage available at the motor proceed as follows:

a. Measure the incoming voltage across lines (1 & 2, 2 & 3 and 1 & 3) while the pump is **operating at full capacity**. See Figure 6 on page B-14 or Figure 8 on page B-15.

b. Next, subtract the motor cable voltage drop (see Table 3, Motor Cable Specifications).

c. Do not continue to operate the pump if this voltage is not within the recommended limits. Obtain the services of a qualified electrician to determine the correct field wiring size and other details to insure an adequate voltage supply to the pump.

Table 2. Pump Motor Voltage Limits

Nominal Voltage	Phase	Minimum Voltage	Maximum Voltage
575	3	520	630

Use conduit or cable clamps to secure the incoming field wiring to the control box. Make certain all connections are tight and that cable entry points are

rainproof. Support the cable weight, if required, to prevent excessive strain on cable clamps and cable.

Pump Power Cable Connections

WARNING

The electrical power used to operate this pump is high enough to cause injury or death. Make certain that incoming power is OFF and LOCKED OUT before connecting power or accessory cables to the control box. Obtain the services of a qualified electrician to make all electrical connections.

The standard pump is provided with a 50-foot (15,2m) power cable sealed by heat-shrink tubing in the terminal housing assembly. (See Table 3 for cable specifications.) If a longer power cable is required, an optional cable assembly **must** be ordered from the factory. Splicing of the power cable is **not** recommended by the Gorman-Rupp Company due to safety and warranty considerations.

WARNING

Never attempt to alter the length or repair any power cable with a splice. The pump motor and cable must be completely waterproof. Injury or death may result from alterations.

Table 3. Cable Requirements for Pump Electrical Connections, Model S3C18

Voltage/ Phase	A.W.G. Cable Size	Cable OD (inches)	Conductor Dia. (inches)	Amp Rating* at 30°C (amperes)	DC Resistance at 25°C (ohms/ 1000 ft)	Voltage Drop at Max. Load per 100 ft
575/3	10	0.75	0.12	25	1.11	2.04

*Applies only to SO type cable. Refer to manufacturer's specifications for other cable.

Before connecting the pump power cable to the control box, make certain the incoming power is **OFF** and **LOCKED OUT**. Make certain the control box is **PROPERLY GROUNDED** and that the electrical data on the control matches the motor name plate data.

Connect the pump power cable to the control box as shown in Figure 6 on page B-14 or Figure 8 on page B-15. Use conduit or cable clamps to secure the power and

accessory cables to the control box. Make certain that all connections are tight and that cable entry points are rainproof.

LIQUID LEVEL DEVICES

The standard pump is **not** furnished with a means to automatically regulate liquid level. However, the pump may be controlled to perform filling, or dewatering functions by using **either** of the following optional sensing devices: (see Figure 5 on page B-13).

- **Diaghragm Type**: two fixed position sensors (upper and lower) each contain a diaphragm which flexes with changes in liquid level, thus activating an enclosed miniature switch.
- **Bulb (Float) Type**: a bulb raises or lowers (floats) with the liquid level, thus activating an enclosed miniature switch.

For added safety, the sensing devices operate through low voltage (24 volt) circuitry which is specially designed to fit into the main pump control box.

The circuitry may be prewired as a factory option, or easily added in the field by qualified personnel. For installation and operation, see the detailed instructions included with the optional package.

CAUTION

> Liquid level devices MUST be positioned far enough apart to allow 10 minutes between starts. If the pump motor cycles more than 6 starts per hour, it will overheat resulting in damage to the motor windings or control box components.

TYPICAL INSTALLATION

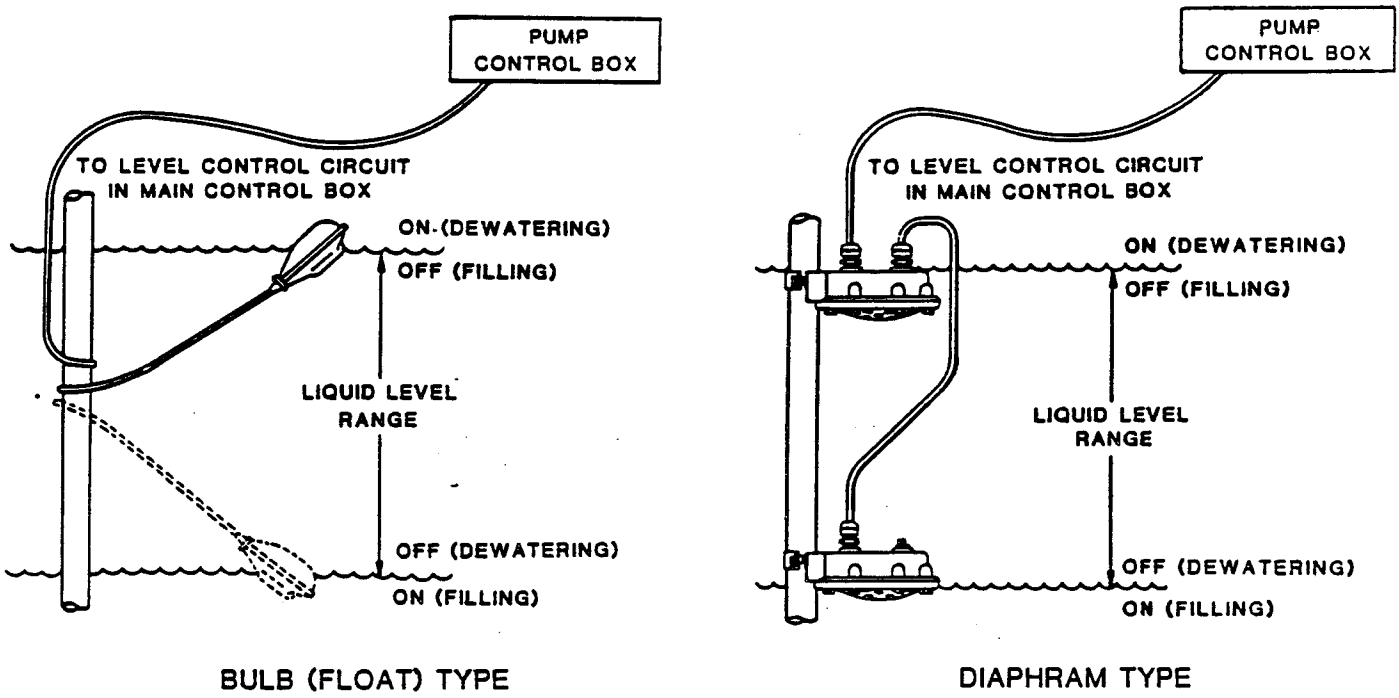

BULB (FLOAT) TYPE

DIAPHRAM TYPE

Figure 5. Liquid Level Devices

CAUTION

The internal wiring of the sensing devices are different for filling and dewatering functions. Be sure to follow the instructions included with the option before making wiring connections.

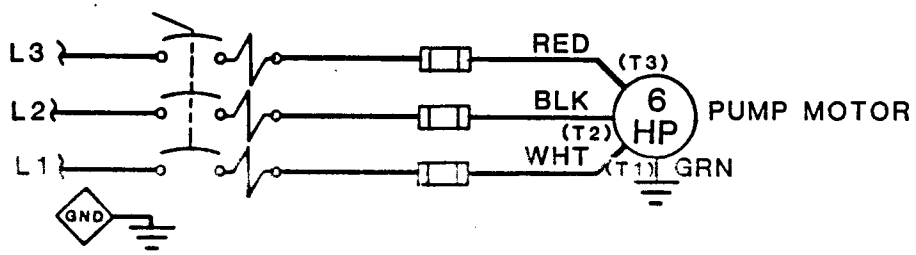

Figure 6. Elementary Wiring Diagram (Without Liquid Level Controls)

If liquid level controls are to be installed, connect the motor power cables and level control power cables as shown in Figure 7 and Figure 8 on page B-15.

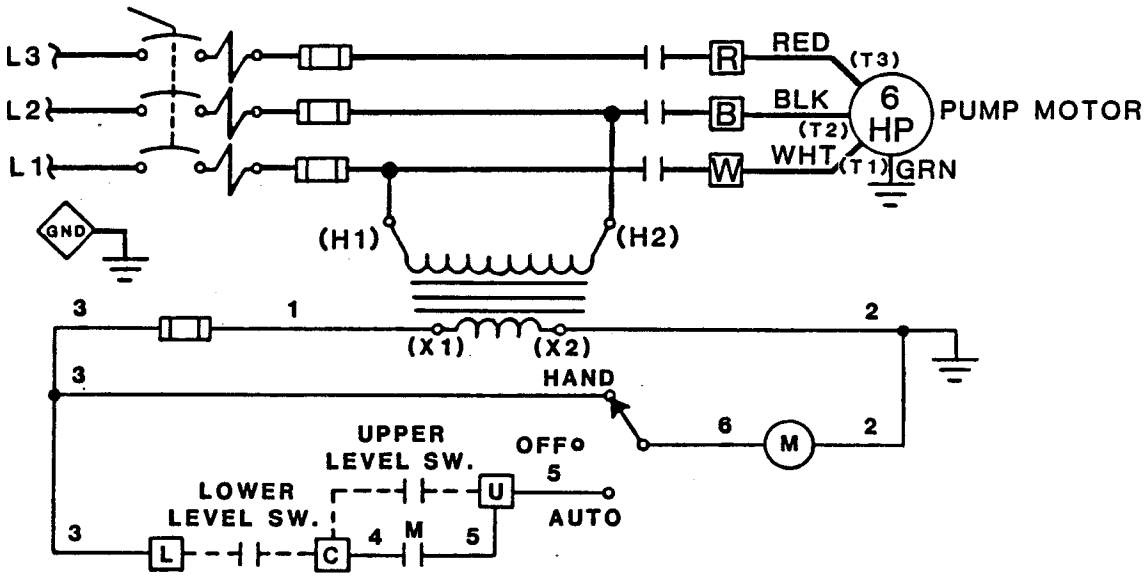

Figure 7. Elementary Wiring Diagram (With Liquid Level Controls)

See Figure 8 on page B-15 for a pictoral wiring diagram and callouts of the control box assembly internal parts.

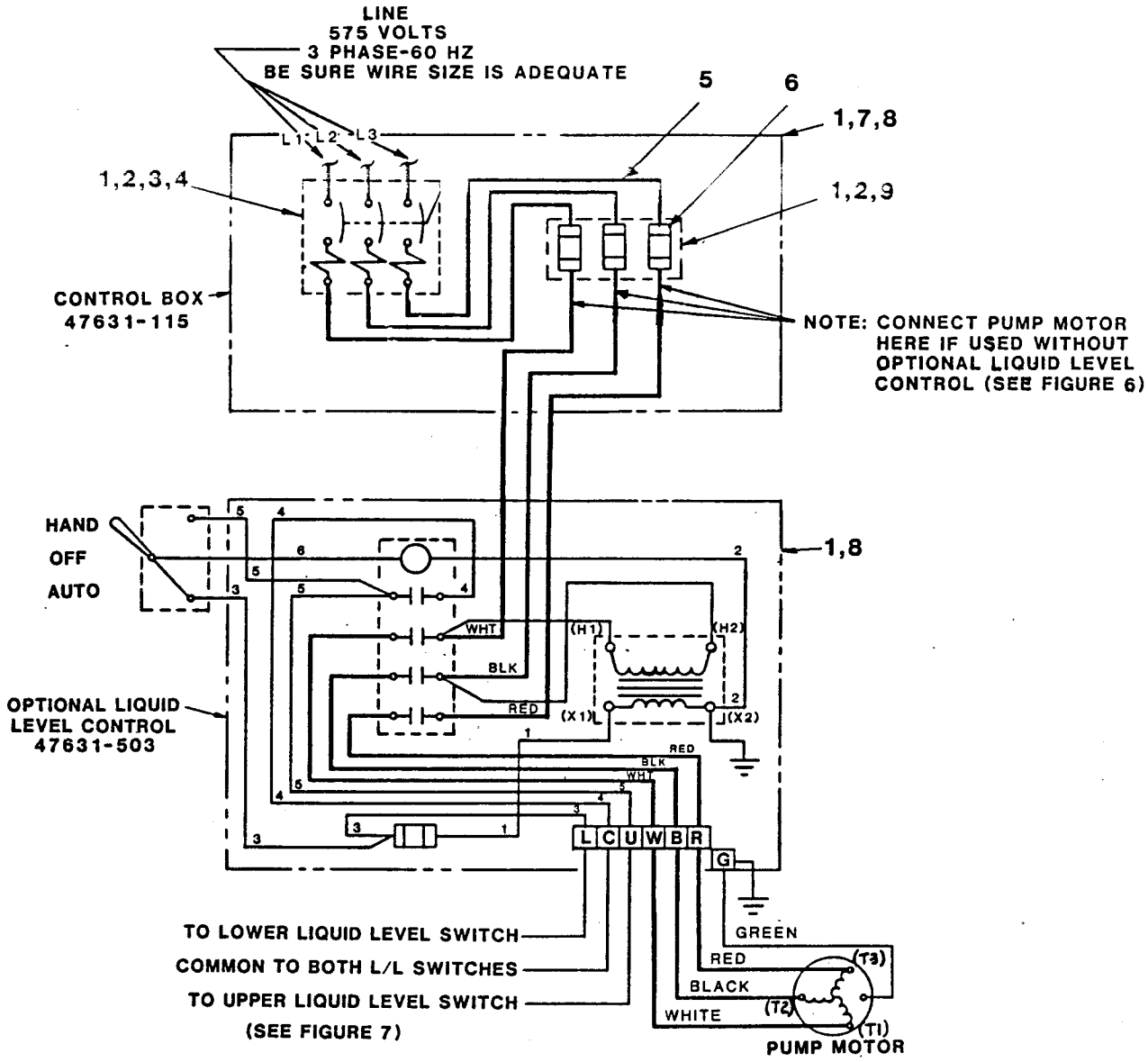

NOTE
WHEN ONLY ONE LIQUID LEVEL SWITCH
IS USED, CONNECT TO TERMINALS L AND U.
VOLTAGE TO FLOAT SWITCHES - 24 VOLTS TO GROUND.

Figure 8. 47631-115 Control Box Assembly - Pictoral Wiring Diagram

PARTS LIST INTERNAL PARTS
47631-115 CONTROL BOX ASSEMBLY

See Figure 3 on page B-7 for external parts

ITEM NO.	PART NAME	PART NUMBER	MATL CODE	QTY
1	FLAT WASHER	K#8	15991	6
2	LOCKWASHER	AK#8	15991	15
3	PHILLIP HD MACHINE SCREW	CF#802	15991	9
4	OVERLOAD UNIT	27541-296	-----	1
5	WIRE ASSEMBLY	18142-133	-----	2
6	FUSE, 30 AMP	27311-120	-----	3
7	BACK PANEL	34621-062	15020	1
8	PHILLIP HD MACHINE SCREW	CF#801	15991	8
9	FUSE BLOCK	27314-306	-----	1

OPERATION - SECTION C

CONTROL BOX FUNCTION

WARNING

This pump motor and control box are not designed to be explosion proof. Do not operate in an explosive atmosphere.

A control box is provided to facilitate operation of the pump. It contains controls for starting and stopping the pump, and provides overload protection for the pump motor. The pump control may be equipped with an optional automatic liquid level sensing device, in which case the low voltage circuits are also contained within the control box.

WARNING

The pump motor is designed to be operated through the control box furnished with the pump. The control box provides overload protection and power control. Do not connect the pump motor directly to the incoming power lines.

CAUTION

Since operation of the pump motor is dependent upon the quality and performance of the electrical controls, the pump warranty is valid only when controls have been specified or provided by the Gorman-Rupp Company.

Component Function

The control box contains the following hand operated switches and controls:

- The **tie handle** operates the control box overload unit. In the OFF position, the tie handle opens the overload unit to interrupt incoming power through the control box and prevent pump operation. In the ON position, it closes the overload unit to permit pump operation. The overload unit will open or "TRIP" automatically in the event of a short circuit overload current, or thermal excess within the pump motor or electrical system. When tripped, move the tie handle to OFF and back to ON to reset the overload unit.

- The **selector switch** (optional on some boxes) controls the mode of operation. In the OFF position, it prevents all operation of the pump. In the HAND position, it allows the pump to run continuously. In the AUTO position, it allows the pump to be controlled automatically by the optional liquid level control system, if used.

NOTE

If the overload unit trips, do not reset it immediately. Wait at least ten minutes before resetting the tie handle back to the ON position. If the overload unit continues to trip, operational problems exist. See **TROUBLESHOOTING.**

WARNING

The motor will restart as soon as the tie handle is reset, unless the selector switch is in the OFF position. Turn the selector switch to OFF and move the tie handle to OFF before approaching the pump.

- The **liquid level devices** (optional equipment) operate in conjunction with the 3-position switch (HAND-OFF-AUTO) supplied as a part of that option. After the level sensors and circuitry have been installed, pump operation may be automatically controlled for filling or dewatering functions. (See **LIQUID LEVEL DEVICES**, Section B.)

PUMP OPERATION

WARNING

This pump is designed to handle most nonvolatile and nonflammable liquids which are mildly corrosive and abrasive. Do not attempt to pump liquids which may damage the pump or endanger personnel as a result of pump failure.

Liquid Temperature And Overheating

The **maximum** liquid temperature for this pump is 120°F. Do not apply it at a higher operating temperature.

Overheating can occur if the pump is misapplied, required to start repeatedly, or if the control box fails to provide adequate protection. Operating the pump

against a closed discharge for extended period will also cause the pump to overheat.

As a safeguard against rupture or explosion due to heat, this pump is equipped with a pressure relief valve which will open if vapor pressure within the pump motor reaches a critical point. If overheating does occur, stop the pump immediately and allow it to cool before servicing it. **Approach any overheated pump cautiously.**

WARNING

Overheated pumps can cause severe burns and injury. If overheating of the pump occurs:

1. Stop the pump immediately.
2. Allow the pump to cool.
3. Refer to instructions in this manual before restarting the pump.

It is recommended that the pressure relief valve assembly be replaced at each overhaul, or any time the pump motor overheats and activates the valve. **Never** replace this valve with a substitute which has not been specified or provided by the Gorman-Rupp Company.

Checking Pump Rotation

Check the direction of pump rotation before operation to ensure that the impeller is rotating in the correct direction.

Suspend the pump from the hoisting bail. Turn it on momentarily and note the direction of twist. For correct rotation and operation, the twist must be in the **counterclockwise** direction when viewed from the **top**.

CAUTION

Secure the pump during rotation check to prevent coiling of the power cable.

If the pump twists clockwise on start, the pump must be returned to the factory or a Gorman-Rupp authorized Submersible Repair Center. Since this pump is driven by a single phase motor, the direction of rotation **can not** be altered by interchanging motor leads at the control box.

STARTING

After the pump and control box have been installed, start the pump as follows.

NOTE

Before actual operation, check the direction of impeller rotation to ensure that the pump is properly wired. See **Checking Pump Rotation** in **OPERATION** section.

CAUTION

Never start the pump more than 6 times per hour. If the motor does not cool between starts, it will overheat resulting in damage to the motor windings or control box components.

Standard Pump (No Liquid Level Devices)

If no liquid level devices have been installed, move the tie handle to the ON position. The pump motor will start and pumping should begin. Since the pump is submerged, priming is not required.

The pump will continue to operate until it is stopped by turning the tie handle to OFF.

With Automatic Liquid Level Devices

If optional liquid level devices have been installed, move the 3-position selector switch to OFF and the tie handle to the ON position.

If desired to operate the pump in the manual mode, set the selector switch to HAND; the pump will continue to run until the switch is returned to OFF, or reset to AUTO.

If desired to operate the pump in the automatic mode, set the selector switch to AUTO; pump operation will be maintained by the optional liquid level control system. To terminate automatic mode, move the selector switch to OFF or HAND.

STOPPING

To stop pump operation, turn the tie handle OFF.

Power going to the pump from the control box is terminated by moving the tie handle to the OFF position, thereby opening the overload unit. This **does not** terminate incoming power through the field wiring connected to the control box.

After stopping the pump, be sure to perform all required maintenance and preservation procedures.

NOTE

It is recommended that a check valve or throttling valve be installed in the discharge line if there is any possibility of siphoning or back flow when the pump is shut off.

Operation Checks

Check the pump for proper operation when it is first started and periodically thereafter to identify minor problems.

Check the pump for unusual noises or excessive vibration while it is operating. If noise or vibration is excessive, stop the pump and refer to the troubleshooting chart for possible causes.

Check the pump strainer screen for clogging caused by stones, sticks, or other debris. Clean the strainer screen when required. In some cases, stopping the pump momentarily may back flush the strainer screen, purging most of the debris from it. If this fails to clean the screen, remove the pump from the sump and remove the debris manually. See **PUMP DISASSEMBLY**.

Never introduce air or steam pressure into the pump casing or piping to remove a blockage. This could result in personal injury or damage to the equipment. If backflushing is absolutely necessary, **liquid pressure** must be limited to 50% of the maximum permissible operating pressure shown on the pump performance curve.

Check the pump for overheating. The pump could overheat if operated against a closed discharge valve, or subjected to repeated start cycles.

Cold Weather Preservation

In freezing temperatures, the pump will not freeze as long as it is submerged in liquid. If the pump casing is not submerged, or if the liquid begins to freeze, remove the pump from the sump or wet well and allow it to dry thoroughly. Run the pump for two or three minutes to dry the inner walls.

If the pump freezes, move it into a warm area until completely thawed, or submerge it into the liquid. If the liquid is near freezing, the pump must be submerged for an extended period of time. Start the pump and check for shaft rotation. If still frozen, allow additional thawing time before attempting to restart.

WARNING

Do not attempt to thaw the pump by using a torch or other source of flame. This could damage gaskets or heat the oil within the pump above the critical point and cause the pump to rupture or explode.

TROUBLESHOOTING - SECTION D

WARNING

```
////////////////////////////////////////////////////////////////
//                                                            //
// The electrical power used to operate this pump is high     //
// enough to cause injury or death. Obtain the services of    //
// a qualified electrician to troubleshoot, test and/or       //
// service the electrical components of this pump.            //
//                                                            //
////////////////////////////////////////////////////////////////
```

Many of the probable remedies listed in the troubleshooting chart below require use of electrical test instruments; for specific procedures, see **Electrical Testing** at the end of the troubleshooting chart.

TROUBLESHOOTING CHART

TROUBLE	POSSIBLE CAUSE	PROBABLE REMEDY
PUMP FAILS TO START, OVER-LOAD UNIT NOT TRIPPED (MANUAL MODE)	Power source incompatible with control box.	Correct power source.
	No voltage at line side of overload unit.	Check power source for blown fuse, open overload unit, broken lead, or loose connection.
	Open circuit in motor windings or power cable.	Check continuity.
	Defective motor power cable.	Replace cable.
	Motor defective.	Check for and replace defective unit.
(AUTOMATIC MODE)	Liquid level device or control circuits improperly connected to main control box.	Check wiring diagrams; correct or tighten connections.
	Level sensing device(s) improperly positioned.	Position device(s) at proper level.
	Level sensing device(s) fouled with mud or foreign material.	Clean sensing device(s).

TROUBLESHOOTING

TROUBLE	POSSIBLE CAUSE	PROBABLE REMEDY
PUMP FAILS TO START, OVER-LOAD UNIT NOT TRIPPED (AUTOMATIC MODE) (cont.)	Float type sensing device(s) tangled or obstructed.	Check installation for free movement of float.
	Defective liquid level sensing device(s) or control panel.	Repair or replace defective unit(s).
OVERLOAD UNIT TRIPS	Low or high voltage, or excessive voltage drop between pump and control box.	Measure voltage at control box. Check that wiring is correct type, size, and length. (See Field Wiring Connection, Section B).
	Defective insulation in motor windings or power cable; defective windings.	Check insulation resistance; check continuity.
	Impeller jammed due to debris or insufficient clearance.	Disassemble pump and check impeller.
	Bearing(s) frozen.	Disassemble pump and check bearing(s).
	Terminal housing incorrectly wired. (Dual voltage or single phase motors only).	Check terminal housing internal connections against motor wiring plate and schematic wiring diagram.
MOTOR RUNS, BUT PUMP FAILS TO DELIVER RATED DISCHARGE	Discharge head too high.	Reduce discharge head, or install staging adaptor and additional pump.
	Low or incorrect voltage.	Measure control box voltage, both when pump is running and when shut off.
	Discharge throttling valve partially closed; check valve installed improperly.	Open discharge valve fully; check piping installation.
	Discharge line clogged or restricted; hose kinked.	Check discharge lines; straighten hose.
	Liquid being pumped too thick.	Dilute liquid if possible.

TROUBLE	POSSIBLE CAUSE	PROBABLE REMEDY
MOTOR RUNS, BUT PUMP FAILS TO DELIVER RATED DISCHARGE (cont.)	Strainer screen or impeller clogged.	Clear clog(s). Stop pump; back flow may flush away debris.
	Insufficient liquid in sump or tank.	Stop pump until liquid level rises.
	Worn impeller vanes; excessive impeller clearance.	Check impeller and clearance. See PUMP END REASSEMBLY.
	Pump running backwards.	Check direction of rotation and correct by interchanging any two motor leads at control box. (See Pump Rotation, Section C).
PUMP RUNS WITH EXCESSIVE NOISE OR VIBRATION	Pumping entrained air.	Check liquid level in sump; check position of pump and liquid level sensing device(s).
	Damaged or unbalanced impeller.	Replace impeller.
	Discharge piping not properly supported.	Check piping installation.
	Impeller jammed or loose.	Check impeller.
	Motor shaft or bearings defective.	Disassemble pump and check motor and bearings.
	Pump cavitation.	Reduce discharge head, or restrict flow on low head applications.

ELECTRICAL TESTING

If you suspect that pump malfunctions are caused by defects in the motor, power cable or control box, perform the following checks to help isolate the defective part.

WARNING

The electrical power used to operate this pump is high enough to cause injury or death. Obtain the services of a qualified electrician to troubleshoot, test and/or service the electrical components of this pump.

CAUTION

Be certain to refer to the wiring diagram(s) in the INSTALLATION section of this manual before reconnecting any electrical components which have been disconnected.

Test Equipment

A volt/amp/ohmmeter and megohmeter of adequate range and quality will be required to conduct the following electrical tests. The suggested equipment indicated below is commercially available, or an equivalent substitute may be used.

Equipment	Manufacturer	Use
Amprobe Model 300 or Amprobe, Jr.	Pyramid Instrument Corp. Lynbrook, NY	To check AC Voltage and current (amperage)
Megohmer	Herman H. Sticht Co. 25 Bark Place New York, N.Y.	To measure resistance (ohms) to ground

Motor And Motor Power Cable Continuity

To check continuity, zero-balance the ohmmeter set at the RX1 scale, and test as follows:

a. Disconnect the motor power cable leads from the control box and connect the test leads to any two of the three power cable leads (not to the green ground lead). If there is a high resistance reading on the

ohmmeter, there is an open or broken circuit caused by a break in the power cable or motor windings, or by a bad connection between the motor and the power cable. Switch one test lead to the third power lead, and test again.

b. If an open or broken circuit is indicated, check the power cable for obvious damage, and replace as necessary (see MAINTENANCE AND REPAIR). If there is no apparent damage to the motor cable, remove the terminal housing (see MAINTENANCE AND REPAIR) and check the continuity of each power cable lead at the terminal posts.

NOTE

When shipped from the factory, the connections between the power cable leads and the terminal posts were encapsulated in heat-shrink tubing and bonded to the terminal plate to provide a water tight seal. In service, these connections may have been potted by the pump operator. Do not cut the tubing or potting away unless absolutely necessary. Check the continuity of each lead from the motor side of the terminal plate. If the continuity is good, there is no need to remove the tubing or potting material. If there is no continuity through the lead, remove the tubing or potting from only that terminal, and check for a loose connection. Be sure to replace the tubing or potting and allow adequate drying time before putting the pump back into service. (See **Terminal Housing And Power Cable Reassembly**, Section E.)

c. If an open circuit still exists after each lead (terminal) has been tested and tightened, then the **entire** motor power cable must be replaced. Splicing or other means of repair are not recommended.

d. If no break is found in the power cable, check the motor leads for continuity. If the test reading indicates an open or broken circuit, there is an open circuit in the motor.

NOTE

It is recommended that a pump with a defective motor be returned to Gorman-Rupp, or to one of the Gorman-Rupp authorized Submersible Repair Centers.

Insulation Resistance

To check insulation, zero-balance the ohmmeter set at the RX100K scale, and test as follows:

a. Disconnect the motor power cable leads from the control box. Connect one test lead to the power cable green ground lead, and touch the other test lead to each of the three power leads in turn.

b. The reading obtained will indicate resistance values in both the power cable and the motor windings. If the resistance reading is infinity (∞), the insulation is in good condition. If the reading is between in-

finity (∞) and 1 megohm, the insulation is acceptable but should be rechecked periodically. If the reading is less than 1 megohm, the insulation should be checked more closely; a reading of zero indicates that the power cable or the motor is grounded.

c. To determine whether the power cable or the motor is grounded, remove the terminal housing (see MAINTENANCE AND REPAIR), disconnect the motor leads from the motor terminals, and test the power cable leads and motor leads separately.

MAINTENANCE AND REPAIR - SECTION E

MAINTENANCE AND REPAIR OF THE WEARING PARTS OF THE PUMP WILL MAINTAIN PEAK OPERATING PERFORMANCE.

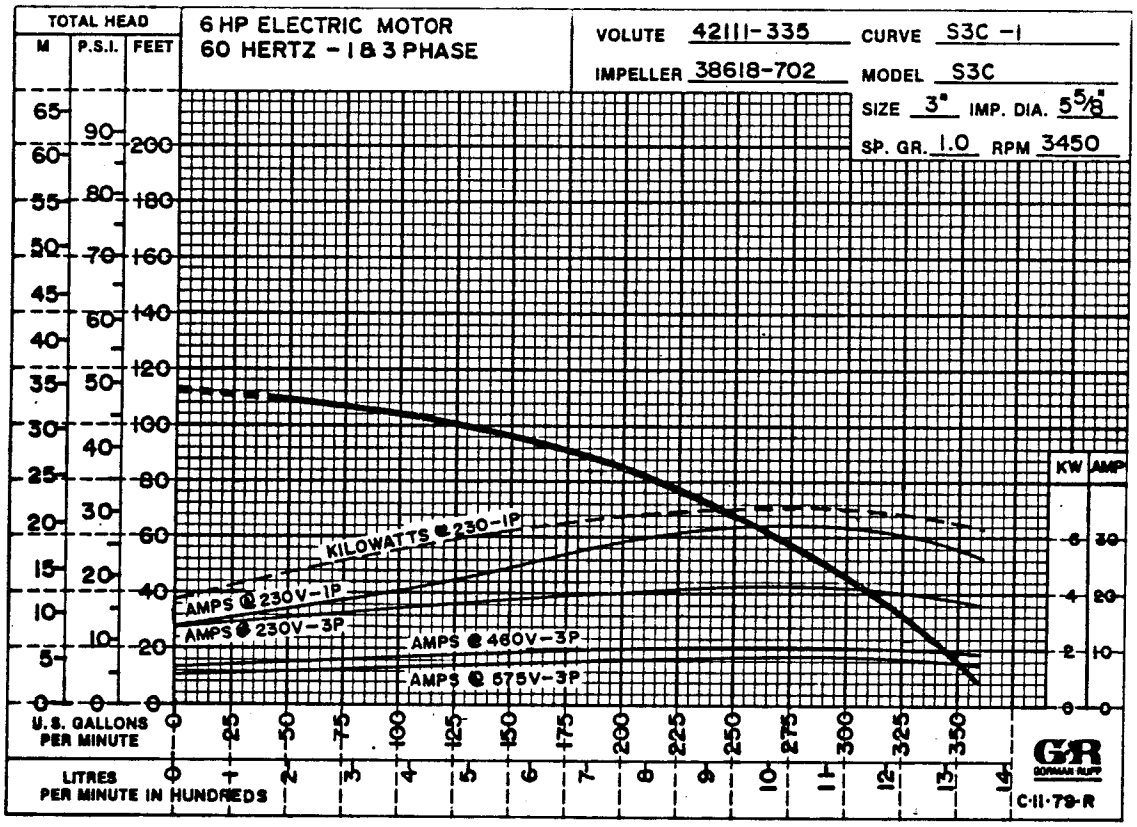

*STANDARD PERFORMANCE FOR PUMP MODEL S3C18-575V 3P

*Based on 70°F clear water at sea level. Since pump installations are seldom identical, your performance may be different due to such factors as viscosity, specific gravity, elevation, temperature, and impeller trim.

If your pump serial number is followed by an "N", your pump is NOT a standard production model. Contact the Gorman-Rupp Company to verify performance or part numbers.

SECTIONAL DRAWING

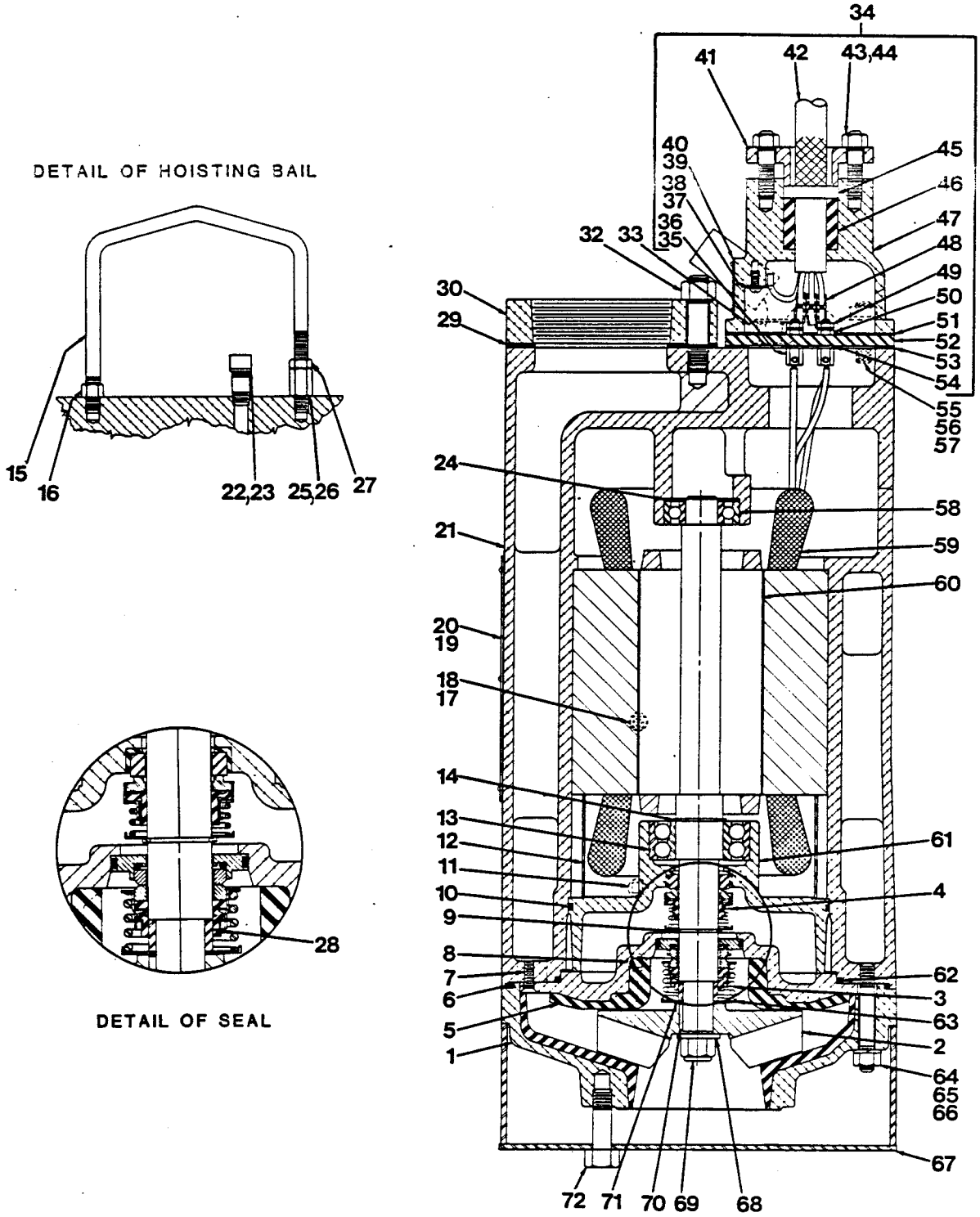

Figure 1. Pump Model S3C18-575V 3P

PARTS LIST
Pump Model S3C18-575V 3P
(From S/N 831599 up)

If your pump serial number is followed by an "N", your pump is NOT a standard production model. Contact the Gorman-Rupp Company to verify part numbers.

ITEM NO.	PART NAME	PART NUMBER	MATL CODE	QTY
1	SUCTION HEAD ASSY	42111-335	24010	1
2	*IMPELLER	38618-702	1718H	1
3	*LOWER SEAL ASSY	25277-345	-----	1
4	*UPPER SEAL ASSY	S01832	-----	1
5	SEAL PLT ASSY	42111-066	24010	1
6	*MOT HOUSING O-RING	25152-270	-----	1
7	FLAT HD MACH SCREW	Y#10-03	17090	2
8	SEAL CAVITY DRAIN/FILL PLUG	PC00004	17000	1
9	SEAL RET RING	S00362	-----	1
10	*INTERM O-RING	25152-258	-----	1
11	MOTOR HOUSING DRAIN PLUG	PC00004	17000	1
12	MOTOR BUSHING	31173-017	23010	1
13	*LOWER BALL BRG	S01834	-----	1
14	SNAP RING	S01831	-----	1
15	HOISTING BAIL	31926-009	15031	1
16	JAM NUT	D00008	17000	1
17	PIPE PLUG	PC00004	17000	1
18	AL HD SETSCREW	GA00603	15990	1
19	NAME PLATE	2613-CY	17020	1
20	DRIVE SCREW	BM#04-03	17000	4
21	MOTOR HOUSING	38311-012	13040	1
22	PIPE CAP	V00006	17000	1
23	HVY PIPE NIPPLE	THA00608	15071	1
24	BRG SPRING WASHER	S01554	-----	1
25	STUD	C00806	17000	1
26	COUPLING NUT	31811-019	17000	1
27	JAM NUT	D00008	17000	1
28	*SHAFT SLEEVE	13878	17020	1
29	*DISCH FLANGE GSKT	38687-045	20000	1
30	DISCHARGE FLANGE	38641-006	13040	1
31	STUD	C00809	17000	3
32	HEX NUT	D00008	17000	3
33	*RELIEF VALVE ASSY	46431-608	-----	1
34	TERMINAL HOUSING AND CABLE ASSY	47367-041	-----	1
35	-TERMINAL POST	11181	14100	3
36	-RD HD MACH SCREW	XA#10-01 1/4S	14990	3
37	-RD HD MACH SCREW	X#10-01 1/2	14990	1
38	-T-TYPE LOCKWASHER	AK#00010	15991	1
39	-INFORMATION PLATE	38816-047	17990	1
40	-DRIVE SCREW	BM#04-03	17000	4
41	-TERMINAL GLAND	10756-B	13040	1
42	-CABLE ASSY	9166-H	-----	1
43	-STUD	C00606	15991	2
44	-HEX NUT	D00006	15991	2
45	-CABLE GRIP	11227-B	-----	1
46	-GLAND BUSHING	10758-F	19100	1
47	-TERMINAL HOUSING	10757	13040	1
48	* -HEAT SHRINK TUBE	31411-203	19530	3
49	-HEX NUT	D#00010	14990	3
50	-HEX NUT	D#00010	14990	3
51	* -UPPER TERMINAL PLATE GSKT	10321-G	20000	1
52	-TERM PLATE	10320-A	23010	1
53	* -LOWER TEMINAL PLATE GSKT	10321-G	20000	1
54	* -DYNASEAL WASHER	S01590	-----	3
55	STUD	C00506	17000	4
56	HEX NUT	D00005	17000	4
57	LOCKWASHER	J00005	17000	4
58	*UPPER BALL BRG	S01044	-----	1
59	STATOR ASSY	47113-812	-----	1
60	*SHAFT & RTR ASSY	47112-806	-----	1
61	INTERMEDIATE	38311-803	13040	1
62	*SEAL PLT O-RING	S02194	-----	1
63	SEAL SPRING RET	8793	17990	1
64	STUD	C00611	17000	6
65	HEX NUT	D00006	17000	6
66	LOCKWASHER	J00006	17000	6
67	STRAINER	46611-001	24151	1
68	IMP WASHER	KB00008	17090	1
69	IMP LOCKNUT	BC00008-S	17000	1
70	*IMPELLER KEY	N00302 1/2	17000	1
71	*IMP ADJ SHIM SET	2-Y	17090	REF
72	NYLOCK CAPSCREW	BT00806	17000	3
NOT SHOWN:				
	CABLE TIE	27111-212	-----	1
	CONTROL BOX ASSY	47631-115	-----	1
	SUBMERSIBLE MOTOR OIL - 1 QUART	9568	-----	1
	IMPELLER PULLER	10285	-----	1
	MOTOR VOLTAGE TAG	38816-128	-----	1
	INFO PLATE	38816-047	17990	1
	DRIVE SCREW	BM#04-03	17000	2
OPTIONAL:				
	*REPAIR GSKT SET	11000-S	-----	1
	POTTING KIT	12442-B	-----	1
	HEAT SHRINK TUBE AND ADHESIVE KIT	48315-008	-----	1
	STAGING ADAPTION			
	-DISCH FLANGE	38641-006	13040	1
	-DISCH FLG GSKT	38687-045	20000	1
	SST STRAINER	46611-006	24170	1
LIQUID LEVEL DEVICES:				
	DIAPHRAGM TYPE	GRP48-03 or GRP48-06		1
	FLOAT TYPE	27471-155	-----	1
	LOW VOLT CONTROL - 24 VOLT	47631-503	-----	1

*INDICATES PARTS RECOMMENDED FOR STOCK

Above Serial Numbers Do Not Apply To Pumps Made In Canada.

CANADIAN SERIAL NO ..... AND UP

PUMP AND MOTOR DISASSEMBLY AND REASSEMBLY

The following maintenance and repair instructions are keyed to the sectional view (see Figure 1) and the accompanying parts list.

WARNING

The electrical power to operate this pump is high enough to cause injury or death. Make certain that the tie handle on the control box is in the OFF position and locked, or that the power supply to the control box has been otherwise cut off and locked out, before attempting to open or service the pump assembly. Tag electrical circuits to prevent accidental start-up.

Before attempting to service the pump or control, cut off the power supply to the control box and close any valves in the discharge line.

WARNING

Do not attempt to lift the pump by the motor power cable or the piping. Attach proper lifting equipment to the hoisting bail fitted to the pump. If chains or cable are wrapped around the pump to lift it, make certain that they are positioned so as not to damage pump, and so that the load will be balanced.

Use the hoisting bail to lift the pump from the wet well or sump and move it to a location where the discharge line can be removed. It is not necessary to disconnect flexible hose before removing the pump from the sump or wet well. If rigid discharge piping is used, disconnect the piping or the discharge flange (30) before attempting to remove the pump. To remove the discharge flange, remove the nuts (32) securing the flange to the motor housing (21). Remove and discard the flange gasket (29).

Select a suitable location, preferably indoors, to perform the degree of maintenance required. If the motor housing is to be opened, the work must be done in a clean, well-equipped shop. All maintenance functions must be performed by qualified personnel.

Check the chart in **TROUBLESHOOTING** to determine the nature of the pump problem. If the problem is mechanical in nature, such as worn pump parts, seal replacement, lubrication, etc., refer to **PUMP END DISASSEMBLY** for instructions.

If the problem is electrical, complete disassembly of the pump may not be required. Refer to **Electrical Testing** and have a qualified electrician check out control box, cable and terminal housing assembly. If the problem is determined to be in the motor, proceed with **PUMP END DISASSEMBLY** followed by **MOTOR DISASSEMBLY**. Otherwise, see **Control Box** and **Terminal Housing And Cable Disassembly**.

All gaskets and most O-rings **must** be replaced if disturbed. A repair gasket kit is listed on the parts list as an option.

PUMP END DISASSEMBLY

Strainer Disassembly

To remove the strainer (67), raise the pump slightly or lay it on its side and remove the nylock capscrews (72) securing the strainer to the suction head (1). If the impeller is clogged, the debris can usually be removed without further disassembly.

Draining Oil From Seal And Motor

After removing the strainer, the suction head (1) and impeller (2) may be serviced without draining the oil cavities. However, the oil should be drained before attempting to replace the shaft seals (3 and 4) or repair the motor.

CAUTION

> Let the pump cool before removing the seal or motor cavity drain plug. Pressure built up within a hot pump could cause the oil to spray out when the plug is removed. Remove the plug slowly and permit pressure to vent to atmosphere.

Lay the pump on its side with the drain plugs (8 and 11) facing up, and clean any dirt from around the plugs. Remove the seal cavity drain/fill plug and install a short 1/4-inch NPT nipple in the hole. Tip the pump up and drain the seal oil into a **clean** container. Inspect it for water, dirt or cloudy condition which could indicate lower seal failure or poor gasket seal.

If motor problems are suspected, remove the motor cavity drain plug (11) and use a short nipple to drain the oil into a **clean** container at this time. Inspect the oil for dark color which could indicate motor overheating, dirt or water contamination. The presence of dirt or water could indicate a breakdown in the waterproof integrity of the motor cavity, probably due to poor gaskets or seals.

Use 'Loctite Pipe Sealant With Teflon No. 592' or equivalent compound on the threads of the drain plugs when reinstalling them.

Positioning Pump For Disassembly

It is recommended that the pump be positioned upside down during disassembly. To hold the pump in the inverted position, screw a pipe in the discharge flange

(30) and clamp it in a large vise. If the discharge flange has been removed, secure the discharge studs (31) to a bench or work stand. Be careful not to damage the terminal housing (47) or power cable assembly (42) while in this position. Use adequate equipment and personnel to safely handle the pump until it is secured. If inverting the pump is not practical, lay the pump on its side and secure it.

Impeller Disassembly

After the strainer (67) has been removed, remove the hardware (65 and 66) securing the suction head (1) to the motor housing (21), and remove the suction Remove and discard the suction head O-ring (6).

Wedge a piece of wood between the vanes of the impeller (2) and the motor housing studs (64) to prevent shaft rotation. Remove the impeller locknut (69) and flat washer (68).

Remove the piece of wood from between the vanes of the impeller. Install the impeller puller supplied with the pump, and pull the impeller from the shaft. Use caution when removing the impeller from the shaft; tension on the seal spring will be released. Retain the impeller key (70).

Remove the impeller adjusting shims (71); for ease of reassembly, tie and tag the shims.

Lower Seal Disassembly

(Figures 1 and 2)

Carefully remove the spring retainer (63) and spring. Remove the shaft sleeve (28) and work oil under the bellows assembly. Use a stiff wire with a hooked end to pull the rotating portion of the seal from the shaft.

To remove the stationary portion of the seal, remove the flat-head machine screws (7) and pull the seal plate (5) off the rotor shaft. Remove and discard the seal plate O-ring (62). Place a **clean** cloth on a flat surface to protect the seal face of the stationary element, and place the seal plate on the cloth with the impeller side down. Use a drift pin or screwdriver to press on alternate sides of the stationary seat until the stationary element, seat, and O-rings are removed.

Upper Seal Disassembly

(Figures 1 and 2)

Unless cracked or otherwise worn, it is not necessary to remove the intermediate (61) for access to the upper seal assembly (4).

Remove the seal retaining ring (9) with snap ring pliers. Use caution when removing the snap ring; tension of the seal spring will be released. Remove the seal spring retainer and spring. Lubricate the rotor shaft adjacent to the

seal, and work oil under the bellows. Use a stiff wire with a hooked end to pull the rotating portion of the seal off the shaft.

Slide the hooked ends of two wires along the shaft and under the stationary seal seat. Hook the back side of the seat and pull it from the intermediate (61).

NOTE

Do not disassemble the motor unless it is necessary and a clean, well-equipped shop is available. If the motor housing components are to be serviced, see **MOTOR DISASSEMBLY** in this section. Do not reassemble the pump end components at this time.

If no further disassembly is required, proceed to appropriate areas in **PUMP END REASSEMBLY.**

PUMP END REASSEMBLY

NOTE

Reuse of old O-rings, gaskets, or shaft seal parts may result in premature leakage or reduced pump performance. It is strongly recommended that an overhaul gasket kit and new shaft seal assemblies be used during reassembly (see the parts list for part numbers).

Cleaning Old Parts

With the pump inverted, stuff a clean tissue into the stationary seat bore of the intermediate (61) (or wrap a small rag around the shaft) to prevent foreign material from entering the motor cavity.

Carefully inspect O-rings or gaskets before removal and cleaning to determine if a proper seal and compression existed prior to disassembly. If sealing was faulty or questionable, the cause must be determined and corrected before reassembly. Replace any parts required.

Thoroughly clean all reuseable parts. Remove all O-rings and gaskets and clean the sealing surfaces of dirt or gasket material. Be careful not to scratch gasket surfaces.

WARNING

Most cleaning solvents are toxic and flammable. Use them only in a well-ventilated area free from excessive heat, sparks, and flame. Read and follow all precautions printed on solvent containers.

Neither of the shaft seal assemblies should be reused because wear patterns on the finished faces cannot be realigned during reassembly. This could result in premature failure. If necessary to reuse an old seal in an emergency, **carefully** wash all metallic parts in fresh cleaning solvent and allow to dry thoroughly.

Handle seal parts with extreme care to prevent damage. Be careful not to contaminate precision finished faces; even fingerprints on the faces can shorten seal life. If necessary, clean the faces with a non-oil based solvent and a clean, lint-free tissue. Wipe **lightly** in a concentric pattern to avoid scratching the faces.

Inspect the seal components for wear, scoring, grooves, and other damage that might cause leakage. If any components are worn, replace the complete seal; **never mix old and new seal parts.**

Install the shaft seals as illustrated in Figure 2.

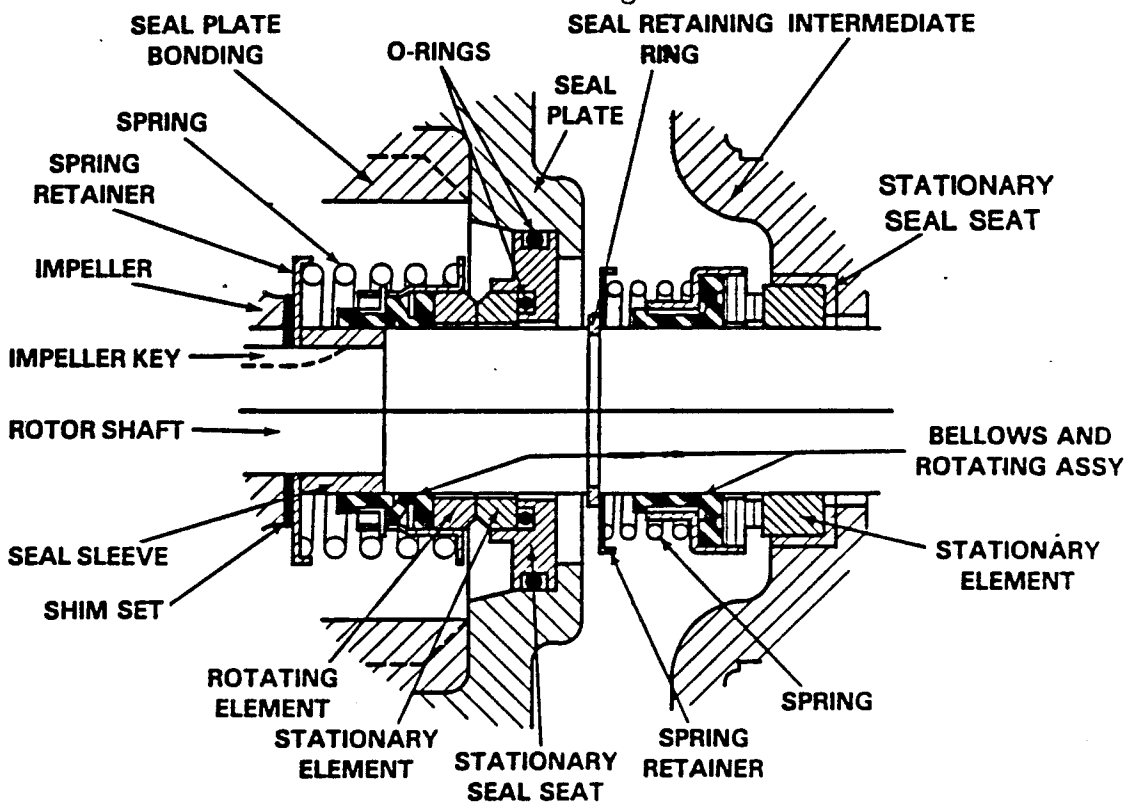

Figure 2. Seal Assemblies 25277-345 and S01832

Upper Seal Reassembly

If a new seal is to be installed, do not unwrap it until time of installation. Cleanliness of all seal components is a must, especially the seal faces.

Clean the rotor shaft with solvent and dry it with a cloth free of lint and dirt.

Carefully remove the material stuffed into the seat bore (or unwrap the shaft). Be sure no debris stopped by the material falls into the motor cavity.

Carefully clean the seal bore in the intermediate. Check for burrs or nicks that might cut seal components or prevent a good seal. Apply a **light** coating of oil to the bore.

Subassemble the stationary element in the stationary seat and apply a coating of light oil to the outside of the stationary seat. Position this subassembly in the intermediate bore with the sealing face up and cover the sealing face with a clean tissue. Use your thumbs to press the assembly into the bore. Apply equal pressure on opposite sides until the seat contacts the bore shoulder. Remove the tissue and inspect the seal face to ensure that it is clean and dry. If cleaning is necessary, use a clean tissue to wipe **lightly** in a concentric pattern.

Unpack the rotating portion of the seal. Be certain the seal face of the rotating element is free of grit or surface damage. Because the rotating element may not stay in the bellows retainer when turned upside down, place a **small** amount of grease at equal spaces on the back of the element and position it in the bellows retainer. The grease should hold the element in position until the seal is installed. Assemble the drive grooves of the rotating element into the drive lugs of the bellows retainer.

Apply a light coating of oil to the rotor shaft and the I.D. of the bellows. Place the rotating seal portion on the shaft with the seal face down. Apply firm, steady pressure, with clean hands, on the seal retainer until it slides down the shaft and the seal faces contact. This step should be done in one continuous motion to prevent the bellows from sticking or rolling as it passes over the retaining ring groove.

NOTE

When pressing the seal components onto the rotor shaft, use hand pressure only. A push tube cut from a length of plastic pipe will aid in installing seal components. The I.D. of the push tube should be approximately the same as the I.D. of the seal spring.

Slide the seal spring over the shaft and bellows retainer, and install the spring retainer. Compress the spring and install the seal retaining ring (9). See Figure 2 for proper order of seal assembly.

Lower Seal Reassembly

Inspect the seal plate (5) for cracks, distortion or erosion and replace if defective. Clean the seal plate bore and O-ring surface. Lightly oil the O-ring (62), and install it on the seal plate. Lay the seal plate on a clean, flat surface with the impeller side facing up.

Unpack the stationary seat, and check that the O-rings are properly installed (see Figure 2). Apply a light coating of oil to the outer O-ring.

Place clean tissue over the sealing face of the stationary element and subassemble it into the stationary seat, making sure that the grooves in the element fit into the drive lugs in the seat. Press this subassembly into the seal plate bore until the stationary seat bottoms squarely. Remove the tissue and inspect the seal face to ensure that it is clean and dry. If cleaning is necessary, use a clean tissue to wipe lightly in a concentric direction.

NOTE

When installing seal components, use hand pressure only. A push tube cut from the length of plastic pipe will aid in installing seal components. The I.D. of the push tube should be approximately the same as the I.D. of the seal spring.

Position the seal plate and stationary subassembly on the rotor shaft so that the seal plate seats against the motor housing (21), and secure it with the flat-head machine screws (7).

Thoroughly clean and polish the shaft sleeve (28) and replace it if there are nicks or cuts on either end. Lightly oil the sleeve and install it on the shaft with the chamfered end toward the shaft shoulder.

Unpack the rotating portion of the seal. Be certain that seal face of the rotating element is free of grit or surface damage. Because the rotating element may not stay in the bellows retainer when turned upside down, place a **small** amount of grease at equal spaces on the back of the element and position it in the bellows retainer. The grease should hold the element in position until the seal is installed. Assemble the drive grooves of the rotating element into the drive lugs of the bellows retainer.

Lightly oil the I.D. of the bellows, and apply firm, steady pressure, with clean hands, on the bellows retainer until it slides down the shaft and the seal faces contact.

Slide the seal spring over the shaft and bellows retainer, and install the spring retainer (63).

Impeller Reassembly

Reinstall the same thickness of impeller shims (71) as originally removed.

Inspect the impeller (2), and replace it if cracked or worn.

Install the impeller key (70) in the rotor shaft keyway, align the impeller keyway, and push the impeller on the shaft until it seats firmly against the impeller adjusting shims.

NOTE

The clearance between the face of the impeller and the suction head can only be measured after the impeller and suction head are fully installed.

After the impeller has been installed, coat the threads of the rotor shaft with 'Never-Seez' or equivalent compound. Install the impeller washer (68) and nylon locknut (69). Wedge a block of wood between the impeller vanes and the motor housing studs (64) to prevent shaft rotation, and torque the nylon locknut to 60 ft. lbs. (720 inch lbs.). Remove the wood block.

Thoroughly clean the suction head (1) and its O-ring surface. Replace the O-ring (6), and lubricate it with light oil. Install the suction head over the

motor housing studs (64) and seal plate (5). Coat the threads of the studs with 'Never-Seez' or equivalent compound, and install the hardware (65 and 66) securing the suction head. Torque the nuts to 20 ft. lbs. (240 inch lbs.).

There should be a clearance of .008 to .015 inch between the suction head and the face of the impeller. Reach into the suction head with a feeler gauge to measure this clearance. If the impeller clearance is not within these limits, remove the suction head and the impeller, then add or remove impeller adjusting shims (71) as required. Reinstall the impeller and suction head, and recheck the clearance.

Strainer Reassembly

Inspect the strainer (67) for cracks, broken welds and distortion, and replace if defective. Position the strainer squarely against the shoulder of the suction head (1), and secure it with the nylock capscrews (72).

See **LUBRICATION** and **FINAL ASSEMBLY** before putting the pump into service.

MOTOR DISASSEMBLY

Disassembly of the motor is rarely required except to replace the motor rotor, stator, bearings, or intermediate. Do not disassemble the motor unless it is necessary and a clean, well-equipped shop is available.

NOTE

It is recommended that a pump with a defective motor be returned to Gorman-Rupp, or to one of the Gorman-Rupp authorized Submersible Repair Centers.

WARNING

The electrical power to operate this pump is high enough to cause injury or death. Make certain that the tie handle on the control box is in the OFF position and locked, or that the power supply to the control box has been otherwise cut off and locked out, before attempting to open or service the pump assembly. Tag electrical circuits to prevent accidental start-up.

Carefully inspect any O-rings or gaskets before removal and cleaning to determine if a proper seal and compression existed prior to disassembly. If sealing was faulty or questionable, the cause must be determined and corrected before reassembly. Replace any parts as required.

Terminal Housing And Power Cable Disassembly

If the pump is maintained in an upright position, the terminal housing and power cable assembly (34) may be serviced without draining the oil from the motor cavity. However, the oil must be drained before attempting to disassemble the motor housing (21) and components. To drain the oil, see **Draining Oil From Seal And Motor** in **PUMP END DISASSEMBLY**.

Total disassembly of the terminal housing and power cable is not always required. Disassemble and replace only the parts which have been proven defective by inspection or testing. See **Electrical Testing** in **TROUBLESHOOTING**.

The terminal housing and power cable assembly (34) may be serviced without disassembling the motor housing or pump end. To remove the terminal housing (47), remove the hardware (56 and 57) securing the terminal housing to the motor housing (21). Raise the terminal housing and terminal plate for access to the motor terminal posts (35). Loosen the machine screws (36) and disconnect the motor leads from the terminal posts. Remove the terminal housing and power cable assembly.

To separate the power cable (42) from the terminal housing, remove the nuts (44) securing the terminal gland (41) to the terminal housing. Slide the gland back along power cable. Compress the wire mesh of the cable grip (45) and move it back along power cable. Oil the gland bushing (46) and terminal housing bore and pull firmly on the cable. (Allow the oil to leak in around the bushing by agitating the cable in the bore.) After the bushing has been loosened, the cable should pull out far enough to expose the gland bushing. Apply oil on the cable jacket and slide the bushing back along the cable. Quite often, pressure exerted on the bushing will deform the cable jacket. If such is the case, additional oil and effort will be required to remove the bushing.

NOTE

> If the rubber bushing cannot be removed from the terminal housing as indicated, it may be necessary to cut the bushing into small pieces or cut the cable.

Push approximately 6 inches of the power cable into the terminal housing so that the terminal plate (52) comes free of the terminal housing. This should permit access to the power cable connections in the terminal plate.

To disconnect the power cable, remove the round head screw (37) and lockwasher (38) securing the green ground lead. When shipped from the factory, the connections between the power cable leads and terminals were encapsulated in heat-shrink tubing (48) and bonded to the terminal plate (52). (In service, the heat-shrink tubing may have been replaced by potting compound during previous repair.) Cut away the bonding adhesive (or potting) and remove the upper hex nuts (49). Disconnect the power cable leads from the terminal posts.

Pull the power cable out of the terminal housing. The gland bushing (46), cable grip (45) and terminal gland (41) can be removed from the cable.

It is not necessary to remove the heat-shrink tubing from the power cable leads unless the terminals require replacement. If replacement is required, carefully cut the tubing from around the leads and terminals.

If necessary to replace the terminal plate (52), unscrew the lower nuts (50) from the terminal posts (35) and remove the posts and dyna-seal washers (54) from the terminal plate. Discard the terminal plate gaskets (51 and 53).

See **Terminal Housing And Power Cable Reassembly** if no further disassembly is required.

Rotor Disassembly

See **Pump End Disassembly**, and remove all pump end components.

With the pump end disassembled and the motor cavity drained, grasp the threaded end of the rotor shaft (60) and pull out the shaft and assembled intermediate (61), rotor and ball bearings (13 and 58). Use caution to prevent the rotor from falling on the stator windings. Reach into the motor housing and remove the motor bushing (12) and the wavy spring washer (24) from the upper bearing bore.

If the motor shaft and assembled parts cannot be removed by hand, screw on the impeller locknut and use a commercial slide hammer puller to remove the assembly.

Pull the intermediate (61) from the lower ball bearing, and remove the O-ring (10). Use a bearing puller to remove the upper and lower ball bearings (13 and 58) from the rotor shaft. It is not necessary to remove the retaining ring (14) unless replacement is required. Use snap ring pliers to remove the ring.

Stator Disassembly

It is recommended that the stator (59) be left in place unless it is defective. If the stator must be removed, disconnect the motor leads from the terminal posts (35) as described in **Terminal Housing And Power Cable Disassembly**.

Remove the pipe plug (17) located in the motor housing, and loosen the allen head setscrew (18) located underneath the pipe plug.

Position an expandable tool, such as a split disc, approximately 2 inches down inside the stator, and expand the tool tightly and squarely on the I.D. Attach a lifting device to the center lifting eye of the tool and raise the assembly one inch off floor. Take care not to damage the stator end turns. Use a soft-faced mallet to rap alternate edges of the motor housing (21), and "walk" the stator out. Continue this process until the stator clears the motor housing.

NOTE

> It may be necessary to heat the motor housing to permit stator removal.

After the stator has been removed, wrap it in clean dry rags or other suitable material. The stator **must** be kept clean and dry. When handling the stator, do not set it on the end windings; lay it on its side.

CAUTION

Do not attempt to rewind the stator. Winding tolerances and materials are closely controlled by the manufacturer, and any deviation can cause damage or operating problems. Replace the stator, or return it to one of The Gorman-Rupp Authorized Submersible Repair Centers or The Gorman-Rupp factory, if defective.

Relief Valve

It is recommended that the relief valve assembly (33) be replaced at each overhaul, or at any time the pump motor overheats and activates the valve. Never replace this valve with a substitute which has not been specified or provided by the Gorman-Rupp Company.

When installing the relief valve, use 'Loctite Pipe Sealant With Teflon No. 592' or equivalent compound on the threads.

Hoisting Bail

If the hoisting bail (15) requires replacement, loosen the jam nut (27) and coupling nut (26) securing the bail to the stud (25). Loosen the jam nut (16) and unscrew the bail from the motor housing.

MOTOR REASSEMBLY

NOTE

Reuse of old O-rings, gaskets, or shaft seal parts may result in premature leakage or reduced pump performance. It is strongly recommended that an overhaul gasket kit and new shaft seal assembly be used during reassembly (see the parts list for parts numbers).

Stator Reassembly

Clean all gasket and O-ring surfaces completely, removing any old gasket and cement material. Inspect the sealing surfaces for burrs, nicks, and pits which could cause a poor seal. Replace parts as required.

Thoroughly clean the inside of the motor housing (21) with fresh solvent. The interior **must** be dry and free of dirt or lint.

WARNING

Most cleaning solvents are toxic and flammable. Use them only in a well-ventilated area free from excessive heat, sparks, and flame. Read and follow all precautions printed on solvent containers.

Do not unwrap the stator until the motor housing has been prepared for stator installation. The stator **must** be kept clean and dry. When handling the stator, do not set it on its end windings; lay it on its side.

Test the new stator as indicated in **Electrical Testing** in **TROUBLESHOOTING** to ensure that no damage has occurred during handling.

Position an expandable tool, such as a split disc, approximately 2 inches down inside the stator, and expand the tool tightly and squarely on the I.D. Attach a lifting device to the center lifting eye of the tool and carefully lift the assembly. Take care not to damage the stator end turns. Slip a sleeve over the stator lead wires to prevent damage to them.

Invert the motor housing. Position the stator so that the leads are in line with the opening for the terminal housing, and carefully lower the stator into the motor housing. If the stator "cocks" in the motor housing, remove it and try again. If necessary, heat the motor housing with a torch to expand it enough for the stator to be installed; when heating the motor housing, **make certain** that the stator is clear to avoid damage to the windings. Apply heat evenly to the inside of the motor housing; excessive heat is not required. Be careful not to damage the stator lead insulation during reassembly.

After the stator is fully and squarely seated on the motor housing shoulder, remove the tool used for lifting, and tighten the allen head setscrew (18) securing the stator in place. Coat the threads of the pipe plug (17) with 'Loctite Pipe Sealant With Teflon No. 592' or equivalent sealant, and install the plug over the allen head setscrew.

Cover the motor housing with a clean, lint-free cloth while the rotor is being assembled.

Rotor Reassembly

Inspect the seal and bearing areas of the rotor shaft. Inspect the shaft for damaged threads, scoring, and a nicked or damaged keyway. Remove nicks and burrs with a fine file or honing stone. If the shaft is bent or damaged, replace the shaft and rotor (a single assembly).

Clean the bearings thoroughly in **fresh** cleaning solvent. Dry the bearings with filtered compressed air and coat with light oil.

WARNING

Most cleaning solvents are toxic and flammable. Use them only in a well-ventilated area free from excessive heat, sparks, and flame. Read and follow all precautions printed on solvent containers.

Rotate the bearings by hand to check for roughness or binding and inspect the bearing balls. If rotation is rough or the bearing balls are discolored, replace the bearings.

CAUTION

Bearings must be kept free of all dirt and foreign material. Failure to do so will greatly shorten bearing life. DO NOT spin dry bearings. This may scratch the balls or races and cause premature bearing failure.

The bearing tolerances provide a tight press fit onto the shaft and a snug slip fit into the motor housing and intermediate. Replace the shaft and rotor (as an assembly), motor housing or intermediate if the proper bearing fit is not achieved.

If removed, install the retaining ring (14) on the shaft. Position the lower ball bearing (13) on the shaft with the loading groove facing **away** from the impeller end of the shaft. Press the bearing onto the shaft until it seats squarely against the retaining ring.

CAUTION

When installing the bearings onto the shaft, NEVER press or hit against the outer race, balls, or ball cage. Press ONLY on the inner race.

Press the upper ball bearing (58) onto the shaft until it seats squarely against the shaft shoulder.

Clean the bearing bores and all gasket and O-ring surfaces of the intermediate (61) and the motor housing (21), completely removing any old gasket and cement material. Inspect the sealing surfaces for burrs, nicks and pits which could cause a poor seal. Repair or replace as required.

WARNING

Most cleaning solvents are toxic and flammable. Use them only in a well-ventilated area free from excessive heat, sparks, and flame. Read and follow all precautions printed on solvent containers.

Install the wavy spring washer (24) in the motor housing bore.

Carefully ease the rotor and assembled ball bearings through the stator until the upper bearing (58) is firmly seated in the motor housing bearing bore.

Position the motor bushing (12) in the motor housing so that the two drain holes are aligned with the motor cavity drain plug (11). Install the intermediate O-ring (10) and lubricate the I.D. of the intermediate bearing bore.

Position the bearing bore of the intermediate (61) over the lower ball bearing (13) and press the intermediate over the bearing until it seats squarely on the motor bushing (12) and the shoulder of the motor housing. Use caution not to cut the O-ring (10).

See **PUMP END REASSEMBLY**, and reassemble the pump end components.

Terminal Housing And Power Cable Reassembly

WARNING

The electrical power used to operate this pump is high enough to cause injury or death. Make certain that the control handle on the control box is in the OFF position and locked, or that the power supply to the control box has been otherwise cut off and locked out. Tag electrical circuits to prevent accidental start-up. Obtain the services of a qualified electrician and refer to the wiring diagrams in INSTALLATION to make all electrical connections.

Clean the exterior of the pump power cable with warm water and mild detergent, and check for obvious physical damage. Check the cable for continuity and insulation resistance (see **Electrical Testing** in **TROUBLESHOOTING**).

CAUTION

Do not attempt repairs except at either end of the power cable. Splicing is not recommended.

Lubricate the upper bore of the terminal housing (47), outside of the power cable (42), and bores of the terminal gland (41), cable grip (45) and gland bushing (46) for ease of assembly. Slide the terminal gland, cable grip, gland bushing and terminal housing onto the power cable in that order (see Figure 1 to recheck order of assembly).

Work the cable components up the cable to allow approximately 3 ft. of cable to extend below the terminal housing. Temporarily tape the green ground wire to the cable.

Power Cable Potting

WARNING

Do not attempt to operate this pump unless the power cable terminals (except for the ground terminal) are properly potted or sealed with heat-shrink tubing and bonded to the terminal plate. Moisture entering the terminal housing could cause a short circuit, resulting in death or injury to personnel.

If the power cable terminals were removed from the leads, the connections **must** be resealed with a water-tight material such as electrical potting compound or heat-shrink tube.

When shipped from the factory, the cable leads and terminals were encapsulated in heat-shrink tubing (48) and bonded to the terminal plate (52) with hot-melt adhesive to provide a water-tight seal. These materials are included in an optional repair kit listed in the parts list; however, since a glue gun with the required temperature range is not generally available in the field, it is recommended that a repotting kit available from Gorman-Rupp (see optional equipment in parts list) or a commercially available kit (Products Research Corp., part no. PR-1201-Q Class 1 potting compound, or equivalent) be used to reseal the connections. See Figure 3, and the following instructions.

NOTE

Potting compound, hot-melt adhesive and heat-shrink tubing have the same electrical properties when correctly applied. Heat-shrink tubing is used at the factory to ease production. The advantage of using potting compound for field repairs is greater availability, and elimination of special tools.

If heat-shrink tubing is used for field repairs, use **only** materials and heating equipment approved by Gorman-Rupp.

Clean and assemble all terminal components as indicated in the potting instructions.

If removed for replacement, crimp a new terminal on each power cable lead and slide a length of shrink tube (Gorman-Rupp part number 31411-203) over each terminal. The tubing should cover the crimped part of the terminals and extend up the leads far enough to ensure a good seal. Carefully heat each tube with a torch, or commercial hot air gun capable of producing 750° F (399° C), and shrink it around the cable leads and terminals.

After the tubing has shrunk and set, secure the terminals to the terminal posts (35) with the upper nuts (49). Use a hot-melt adhesive tool (Terlan TM-80, set at 450° F (232° C)) to apply adhesive (Gorman-Rupp part number 18661-044) over the terminal posts and around the base of the heat-shrink tubes to completely insulate the electrical connections.

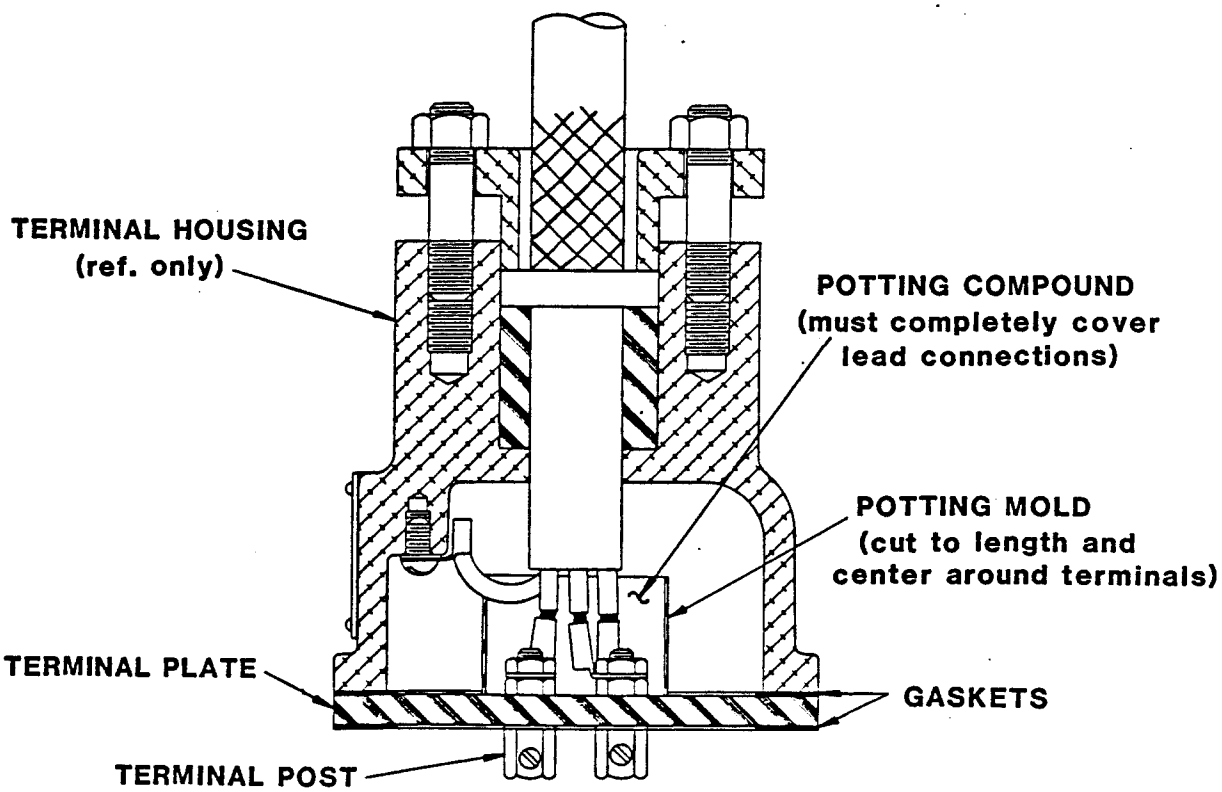

Figure 3. Potting Power Cable Leads In Terminal Housing

If the power cable is to be potted, a repotting kit is available from Gorman-Rupp (see parts list) as an option with this pump. Use this kit, or Products Research Corp. PR-1201-Q Class 1 potting compound, or equivalent.

WARNING

Do not attempt to operate this pump unless the power cable terminals (except for the ground terminal) are properly potted or sealed with heat-shrink tubing and bonded to the terminal plate. Moisture entering the terminal housing could cause a short circuit, resulting in death or injury to personnel.

Remove all the old adhesive or potting compound from the terminal posts, nuts (49 and 50) and terminal plate (52). Inspect the terminal posts for damage, and replace as required. Use a medium-grit sandpaper to prepare the surface of the terminal plate in the area of the potting mold.

NOTE

Clean the cable leads and terminal plate in areas to be potted with cleaning solvent before potting. Potting compound will not adhere properly to oil or grease coated surfaces.

If the terminals were removed from the leads, crimp a new terminal onto each lead.

Assemble the terminal posts (35), dyna seal washers (54) and lower nuts (50) to the terminal plate (52).

Trim the potting mold so it is just long enough to cover the terminal post studs (see Figure 3). Slide the potting mold up over the three standard leads of the power cable (42).

Secure the three power leads on the terminal posts (35) with the upper nuts (49). Slide the potting mold down over the terminal posts and onto the terminal plate. Hang the cable in a vertical position with the terminal plate horizontal. The cable leads and terminal collars should be centered in the potting mold. Use quick-setting cement, such as '3-M Weather Seal' to secure the potting mold to the terminal plate.

WARNING

Most potting base compounds contain toluene; use adequate ventilation and avoid prolonged breathing of vapors. Most potting accelerators contain lead; avoid ingestion or prolonged contact with the skin. Read and follow all warnings and recommendations accompanying the potting kit.

See the instructions with the potting kit regarding application life, and setting and curing time. Mix the base compound and accelerator and fill the mold completely. Tamp the potting material to eliminate air bubbles and ensure that the material has completely covered the area around the terminal posts.

When potting has been completed, leave the terminal plate assembly undisturbed until the potting material has cured. Complete curing usually takes about 24 hours. Curing time can be shortened by using a heat lamp, but be careful not to melt the potting or potting mold, or burn the cable. When potting material is no longer "tacky" to the touch, it has cured.

After the potting material has cured, untape the ground leads and slide the terminal housing down the cable. Secure the green ground lead with the machine screw and lockwasher (37 and 38). Make sure the lead makes good contact with the housing.

Pull gently on the power cable to remove any excess length from within the terminal housing. The terminal plate should fit loosely in the terminal housing.

Lubricate the upper bore of the terminal housing, and slide the gland bushing (46) into place. Compress the wire mesh of the cable grip (45) and slide it down the cable, making sure it comes in contact with the bushing. Slide the terminal gland (41) into place and install the nuts (44). Do not fully tighten the nuts at this time.

Attach the motor leads to the terminal posts (35) using the nylock machine screws (36). If required, rotate the terminal housing and twist the motor leads to remove excess slack.

Coat the threads of studs (55) with 'Never-Seez' or equivalent compound. Install the lockwashers (56), and secure the terminal housing to the motor housing by torquing the nuts (57) to 11 ft. lbs. (132 inch lbs.).

Tighten the nuts (44) drawing the terminal gland (41) down into terminal bore. **Do not** over-tighten the nuts and damage the terminal gland or hardware.

See **LUBRICATION** and **FINAL ASSEMBLY**.

LUBRICATION

Check the oil level in the seal cavity and motor housing before initial startup, after the first two weeks of operation, and every month thereafter. If the oil levels are abnormally low, or the color milky or dark, refer to **Draining Oil From Seal And Motor** in this section for instructions and troubleshooting tips.

NOTE

To accurately check the oil level the pump must be cool.

The grade of lubricant used is critical to the operation of this pump. Use premium quality submersible pump oil of the grade specified in Table 1. Oil must be stored in a clean, tightly closed container in a reasonably dry environment.

Table 1. Typical Pump Oil Properties

Type	Premium high viscosity index, anti-wear hydraulic oil
Dielectric	26,000(volts-min)
Pour point	-20°F to -60°F
Viscosity @ 100°F	110 to 155
Viscosity @ 210°F	40 to 50
Recommended supplier:	
Gulf Oil Company	Gulf Harmony HVI AW 26
Acceptable alternate suppliers:	
Gulf Oil Company	Gulf Harmony 32 AW
SOHIO *	Energol - HLP 32
Shell Oil Company	Tellus 32, Tellus T-23 or T-32
Sun Oil Co.	Sunvis 816 or 916
Texaco	Rando HD 32 or HD AZ 32
A.R.CO.	Duro 32
Exxon	Nuto H 32

* Also Boron & B.P. (British Petroleum) Oil Companies

Seal Cavity

To fill the seal cavity, remove the seal cavity drain/fill plug (8) in the intermediate, and add the recommended grade of submersible pump oil (approximately 1 pint) to the level of the fill plug opening. Maintain the oil at this level. Apply 'Loctite Pipe Sealant With Teflon No. 592', or equivalent sealant to the threads of the drain/fill plug, and reinstall and tighten the plug.

Motor Housing Cavity

Remove the pipe cap (22) and add the recommended grade of submersible pump oil (approximately 3 quarts) to the motor cavity. **Maintain the oil at this level.** Apply 'Loctite Pipe Sealant With Teflon No. 592', or equivalent sealant, to the threads of the heavy pipe nipple (23), and reinstall and tighten the pipe cap.

FINAL ASSEMBLY

If the discharge flange (30) has been separated from the motor housing, replace the gasket (29) and secure the flange with the nuts (32).

Connect the discharge hose, and position the pump in the sump or wet well. If rigid discharge piping is used, connect the piping after the pump has been positioned. Open any valves in the discharge line.

For U.S. and International Warranty Information,
Please Visit www.grpumps.com/warranty
or call:
U.S.: 419—755—1280
International: +1—419—755—1352

For Canadian Warranty Information,
Please Visit www.grcanada.com/warranty
or call:
519—631—2870

THE GORMAN-RUPP COMPANY • MANSFIELD, OHIO
GORMAN-RUPP OF CANADA LIMITED • ST. THOMAS, ONTARIO, CANADA