INSTALLATION, OPERATION, PARTS LIST, AND MAINTENANCE MANUAL

GORMAN-RUPP

OM-01120-0M01

C

April 8, 1981

Motor Driven Self-Priming Centrifugal Pump

Model O2D3-E2 3P

THE GORMAN-RUPP COMPANY • MANSFIELD, OHIO

GORMAN-RUPP OF CANADA LIMITED • ST. THOMAS, ONTARIO, CANADA Printed in U.S.A.

Copyright by the Gorman-Rupp Company

This Installation, Operation, and Maintenance Manual is designed to help you get the best performance and longest life from your Gorman-Rupp pump.

This pump is an O Series, enclosed impeller, self-priming centrifugal model with straight-in suction without a suction check valve, and is suitable for applications where large entrained solids are not a critical factor. For specific service, consult your Gorman-Rupp distributor or the Gorman-Rupp Company.

If there are any questions regarding the pump which are not covered in this manual or in other literature accompanying the unit, please contact your Gorman-Rupp distributor, or write:

The Gorman-Rupp Company P.O. Box 1217 Mansfield, Ohio 44902	or	Gorman-Rupp of Canada Limited 70 Burwell Road St. Thomas, Ontario N5P 3R7

For information or technical assistance on the power source, contact the power source manufacturer's local dealer or representative.

The following are used to alert maintenance personnel to procedures which require special attention, to those which could damage equipment, and to those which could be dangerous to personnel:

NOTE

Instructions to aid in installation, operation, or maintenance or which clarify a procedure.

CAUTION

Instructions which must be followed to avoid causing damage to the product or other equipment incidental to the installation. These describe the procedure required and the damage which could result from failure to follow the procedure.

WARNING

Instructions which must be followed to avoid causing injury or death to personnel. These describe the procedure required and the injury which could result from failure to follow the procedure.

TABLE OF CONTENTS

WARNINGS	Section A
INSTALLATION	Section B
OPERATION	Section C
TROUBLESHOOTING	Section D
MAINTENANCE AND REPAIR	Section E
WARRANTY	

WARNINGS

THESE WARNINGS APPLY TO O SERIES PUMPS WITH ELECTRIC MOTOR DRIVE.

Before attempting to open or service the pump:

1. Familiarize yourself with this manual.
2. Disconnect the motor to ensure that the pump will remain inoperative.
3. Allow the pump to cool if overheated.
4. Vent the pump slowly and cautiously.
5. Close the suction and discharge valves.
6. Check the temperature before opening any covers, plates, or plugs.
7. Drain the pump.

Do not attempt to pump any liquids for which this pump has not been designed.

This pump is usually installed in a permanent configuration. After the pump has been installed, make certain that the pump and all piping connections are secure before attempting to operate it.

Do not operate the pump without shields and/or guards in place over drive shafts, belts and/or couplings, or other rotating parts. Exposed rotating parts can catch clothing, fingers, or tools, causing severe injury to personnel.

Do not operate the pump against a closed discharge valve for long periods of time. This could bring the liquid to a boil, build pressure, and cause the pump to rupture or explode.

Overheated pumps can cause severe burns and injury. If overheating of the pump casing occurs:

1. Stop the pump immediately.
2. Allow the pump to cool.
3. Refer to instructions in this manual before restarting the pump.

Do not remove plates, covers, gauges, pipe plugs, or fittings from an overheated pump. Vapor pressure within the pump can cause parts being disengaged to be ejected with great force. Allow the pump to cool before servicing.

Do not install and operate a non-explosion proof motor in an explosive atmosphere. Install, connect, and operate the motor in accordance with the National Electric Code and all local codes. If there is a conflict between the instructions in the manual accompanying the unit and the National Electric Code or the applicable local code, the National or local code shall take precedence. All electrical equipment supplied with this pump conformed to applicable federal regulations and national codes in effect on the date of manufacture.

The electric power applied to the motor unit is high enough to cause injury or death. Ground the unit before connecting it to the electrical power supply; never use gas piping as an electrical ground. Be sure to connect the motor to the correct phase and voltage. Do not run the pump if the voltage is not within limits. If the circuit breaker or fuse is tripped, examine the problem before restarting the pump.

INSTALLATION

Since pump installations vary, this section is intended only to summarize recommended installation practice. If there are any questions concerning a specific installation, contact your Gorman-Rupp distributor or the Gorman-Rupp Company.

PREINSTALLATION INSPECTION

The pump assembly was inspected and tested before it was shipped from the factory. Before installation, inspect the pump for damage which may have occurred during shipment.

a. Check the pump assembly for cracks, dents, damaged threads, and other obvious damage.

b. Check for and tighten loose bolts, nuts, cap screws, and other attaching hardware. Since gaskets tend to shrink after drying, check for and tighten loose nuts and cap screws securing mating surfaces.

c. Carefully read all tags, decals, and markings on the pump assembly, and perform all duties indicated. Note the direction of rotation indicated on the pump. Check that the pump shaft rotates in the required direction.

CAUTION

Only operate this pump in the direction indicated by the arrow on the pump body and on the accompanying decal. Otherwise, the impeller could become loosened from the shaft and seriously damage the pump.

d. Check all lubricant levels and lubricate as necessary. Refer to the MAINTENANCE AND REPAIR section of this manual.

POSITIONING THE PUMP

Mounting

Locate the pump in an accessible place as close as practical to the liquid being pumped. Level mounting is essential for proper operation. It may be necessary to support or shim the pump for level operation.

Lifting

WARNING

Use lifting and moving equipment in good repair and with adequate capacity to prevent injuries to personnel or damage to equipment.

Make sure that hoists and other lifting equipment are of sufficient capacity to safely handle the pump assembly. If chains or cables must be used, make certain that they are positioned so that they will not damage the pump, and so that the load will be balanced.

CAUTION

The pump assembly can be seriously damaged if the cables or chains used to lift and move the unit are improperly wrapped around it.

SUCTION AND DISCHARGE PIPING

Materials

This pump is usually installed in a permanent piping configuration, but either pipe or hose may be used for suction and discharge lines. Piping materials must be compatible with the liquid being pumped. If hose is used in suction lines, it must be the rigid-wall, reinforced type to prevent collapse under suction. Using pipe couplings in suction lines is not recommended.

Line Configuration

Keep suction and discharge lines as straight as possible to minimize friction losses. Make minimum use of elbows and fittings, which substantially increase friction loss. If elbows are necessary, use the long-radius type to minimize friction loss.

Connections to Pump

Before tightening a connecting flange, align it exactly with the pump port. Never pull a pipe line into place by tightening the flange bolts.

Lines near the pump must be independently supported to avoid strain on the pump which could cause excessive vibration, decreased bearing life, and increased shaft and seal wear. If hose-type lines are used, they should have adequate support to secure them when filled with liquid and under pressure.

Gauges

Most pumps are drilled and tapped for installing discharge pressure and vacuum suction gauges. If these gauges are desired for pumps that are not tapped, drill and tap the suction and discharge lines close to the pump before installing the lines.

SUCTION LINES

To avoid air pockets which could affect pump priming, the suction line must be as short and direct as possible. When operation involves a suction lift, the line must always slope upward to the pump from the source of the liquid being pumped; if the line slopes down to the pump at any point along the suction run, air pockets will be created.

Fittings

Suction lines should be the same size as the pump inlet. If reducers are used in suction lines, they should be the eccentric type, and should be installed with the flat part of the reducers uppermost to avoid creating air pockets. Valves are not normally used in suction lines, but if a valve is used, install it with the stem down or to either side to avoid air pockets.

Strainers

This pump is designed primarily for liquids which do not need straining, and a strainer is not usually furnished with the pump when it is shipped from the factory. If a strainer is furnished with the pump, however, be certain to use it. Any entrained solids which pass through a strainer furnished with the pump will also pass through the pump itself.

If a strainer is not furnished with the pump, but is installed by the pump user, make certain that the total area of the openings in the strainer is at least three or four times the cross section of the suction line, and that the openings will not permit passage of solids larger than the solids handling capability of the pump.

Sealing

Since even a slight leak will affect priming, head, and capacity, especially when operating with a high suction lift, all connections in the suction line should be sealed with pipe dope to ensure an airtight seal. In volatile and/or corrosive service, the pipe dope should be compatible with the liquid being pumped.

Suction Lines In Sumps

If a single suction line is installed in a sump, it should be positioned away from the wall of the sump at a distance equal to one and one-half the size of the suction line.

If there is a liquid flow from an open pipe into the sump, the flow should be kept away from the suction inlet because the inflow will carry air down into the sump, and air entering the suction line will reduce pump efficiency.

If it is necessary to position inflow close to the suction inlet, install a baffle between the inflow and the suction inlet at a distance one and one-half times the size of the suction line. The baffle will allow entrained air to escape from the liquid before it is drawn into the suction inlet.

If two suction lines are installed in a single sump, the flow paths may interact, reducing the efficiency of one or both pumps. To avoid this, position the suction inlets so that they are separated by a distance at least three times the diameter of the suction line.

Suction Line Positioning

The depth of submergence of the suction line is critical to efficient pump operation. Figure 1 shows recommended minimum submergence vs. velocity.

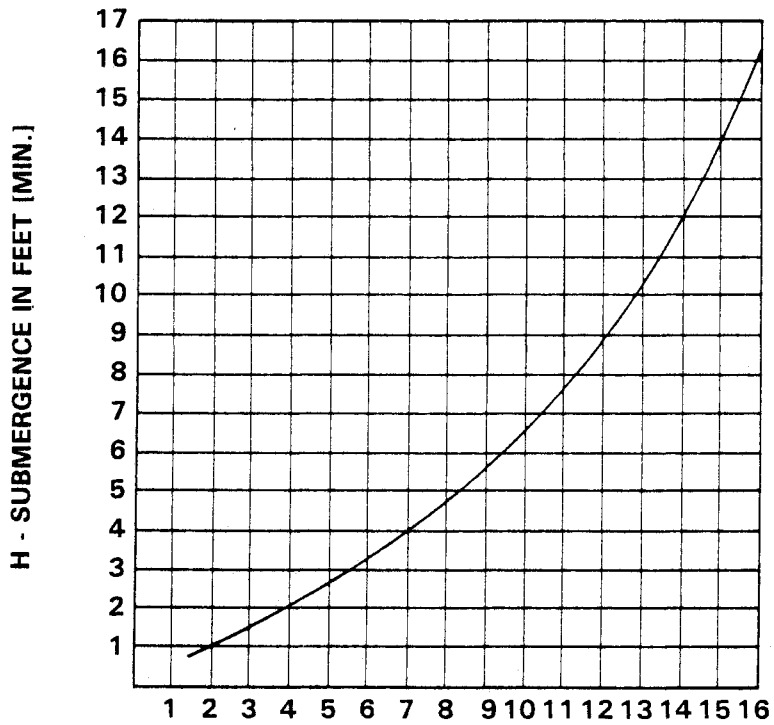

$$\text{VELOCITY IN FEET PER SEC.} = \frac{\text{QUAN. [G.P.M.]} \times .321}{\text{AREA}} \text{ OR } \frac{\text{G.P.M.} \times .4085}{D^2}$$

Figure 1. Recommended Minimum Suction Line Submergence Vs. Velocity

DISCHARGE LINES

Do not terminate the discharge line at a level lower than that of the liquid being pumped unless a siphon breaker is used in the line. Otherwise, a siphoning action causing damage to the pump could result.

Valves

If a throttling valve is desired in the discharge line, use a valve as large as the largest pipe in the line to minimize friction losses. Never install a throttling valve in a suction line.

A check valve in the discharge line is normally recommended, but is not necessary in low discharge head applications.

It is recommended that a throttling valve and a check valve be installed in the discharge line to protect the pump from excessive shock pressure and reverse rotation when it is stopped.

Bypass Lines

If it is necessary to permit the escape of air to atmosphere in initial priming or during the repriming cycle, install an air bypass line — sized so that it will not affect pump discharge capacity — between the pump and the discharge check valve. Since this pump does not use a suction check valve, the discharge end of the bypass line must be submerged in the liquid being pumped in order to maintain suction.

NOTE

The bypass line may clog frequently, particularly if the valve remains closed. If this condition occurs, either use a larger bypass line or leave the shutoff valve open during the pumping operation.

ALIGNMENT

When this pump is shipped from the Gorman-Rupp factory, the pump and motor are securely attached. The attaching hex nuts may become loosened in transit and handling, however, and should be checked before the pump is put into service.

CAUTION

Before operating this pump, make certain that the hex nuts securing the motor to the intermediate are fully tightened.

OPERATION

WARNING

Do not attempt to pump any volatile and/or corrosive liquids for which this pump has not been designed.

PRIMING

Install the pump and piping as described in INSTALLATION. Make sure that the piping connections are tight, and that the pump is securely mounted. Check that the pump is properly lubricated (see LUBRICATION in MAINTENANCE AND REPAIR).

Although this pump is self-priming, it should never be operated unless the volute is filled with liquid.

CAUTION

Never operate this pump unless the volute is filled with liquid. The pump will not prime when dry. Extended operation of a dry pump will destroy the seal assembly.

Fill the pump with liquid:

1. When the pump is being put into service for the first time.
2. When the pump has not been used for a considerable length of time.
3. When the liquid in the volute housing has evaporated.

When the volute housing is full, the pump will prime and reprime as necessary.

To fill the pump, remove the fill plug at the top of the volute housing, and add clean liquid. Be certain to reinstall the fill plug before operating the pump.

WARNING

After filling the volute housing, do not attempt to operate the pump unless the fill plug and all connecting piping is securely installed. Otherwise, liquid in the pump forced out under pressure could cause injury to personnel.

STARTING

Rotation

The correct direction of pump rotation is indicated by an arrow on the pump body, and on the accompanying decal. If the pump is operated in the wrong direction, the impeller could become loosened from the shaft and seriously damage the pump.

> **CAUTION**
>
> Only operate this pump in the direction indicated by the arrow on the pump body and on the accompanying decal. Otherwise, the impeller could become loosened from the shaft and seriously damage the pump.

Consult the operating manual furnished with the motor before attempting to start the motor.

If a three-phase electric motor is being used, check rotation by starting the pump for a moment to see if the rotation is correct. If the shaft, coupling, or V-belt is not visible, rotation can usually be determined by observing the motor cooling fan. If the rotation is incorrect, have qualified personnel interchange any two of the three-phase wires to change direction.

Lines With a Bypass

Since this pump does not have a suction check valve, the discharge end of the bypass line must be submerged in order to maintain suction.

Close the throttling valve in the discharge line, and open the shutoff valve in the bypass line so that the pump will not have to prime against the weight of the liquid in the discharge line. Start the power source. When the pump has been primed and liquid is flowing steadily through the bypass line, close the bypass shutoff valve and open the discharge throttling valve.

Lines Without a Bypass

Open all valves in the discharge line and start the power source. Priming is indicated by a positive reading on the discharge pressure gauge or by quieter operation. The pump may not prime immediately because the suction line must first fill with liquid. If the pump fails to prime within five minutes, stop it and check the suction line for leaks.

After the pump has been primed, partially close the discharge line throttling valve in order to fill the line slowly and guard against excessive shock pressure which could damage pipe ends, gaskets, sprinkler heads, and any other fixtures connected to the line. When the discharge line is completely filled, adjust the throttling valve to the required discharge flow rate.

Leakage

No leakage should be visible at pump mating surfaces, or at pump connections or fittings. Keep all line connections and fittings tight to maintain maximum pump efficiency.

TROUBLESHOOTING

WARNING

Before attempting to open or service the pump:

1. Consult pump service manual.
2. Disconnect the power source to ensure that the pump will remain inoperative.
3. Allow pump to cool if overheated.
4. Close suction and discharge valves.
5. Drain pump.

Trouble	Possible Cause	Probable Remedy
PUMP FAILS TO PRIME	Air leak in suction line.	Correct leak.
	Lining of suction hose collapsed.	Replace suction hose.
	Leaking or worn seal or pump gasket.	Check pump vacuum. Replace leaking or worn seal or gasket.
	Suction lift or discharge head too high.	Check piping installation and install bypass line if needed. See INSTALLATION.
	Strainer clogged.	Check strainer and clean if necessary.
PUMP STOPS OR FAILS TO DELIVER RATED FLOW OR PRESSURE	Air leak in suction line.	Correct leak.
	Suction intake not submerged at proper level or sump too small.	Check installation and correct as needed. Check submergence chart (Section B, 4).
	Lining of suction hose collapsed.	Replace suction hose.
	Impeller or other wearing parts worn or damaged.	Replace worn or damaged parts. Check that impeller is properly centered and rotates freely.
	Impeller clogged.	Free impeller of debris.
	Pump speed too slow.	Check driver output; check belts or couplings for slippage.
	Discharge head too high.	Install bypass line.
	Suction lift too high.	Reduce suction lift.
	Strainer clogged.	Check strainer and clean if necessary.

Trouble	Possible Cause	Probable Remedy
PUMP STOPS OR FAILS TO DE-LIVER RATED FLOW OR PRESSURE (cont)	Leaking or worn seal or pump gaskets.	Check pump vacuum. Replace leaking or worn seal or pump gaskets.
PUMP REQUIRES TOO MUCH POWER	Pump speed too high.	Check driver output; check that sheaves or couplings are correctly sized.
	Discharge head too low.	Adjust discharge valve.
	Liquid solution too thick.	Dilute if possible.
PUMP CLOGS FREQUENTLY	Discharge flow too slow.	Open discharge valve fully to increase flow rate, and run engine at maximum governed speed.
EXCESSIVE NOISE	Cavitation in pump.	Reduce suction lift and/or friction losses in suction line.
	Pumping entrained air.	Locate and eliminate source of air bubble.
	Pump or drive not securely mounted.	Secure mounting hardware.
	Impeller clogged or damaged.	Clean out debris; replace damaged parts.

Motor Driven Self-Priming Centrifugal Pump

Model O2D3-E2 3P

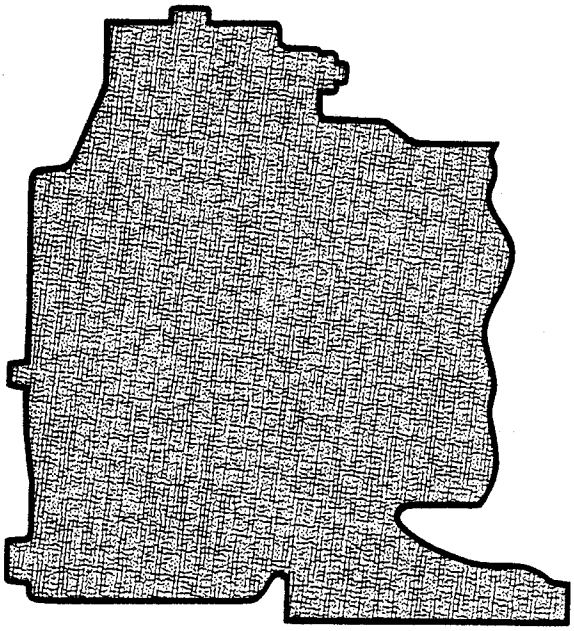

The only moving parts of this pump are the impeller, seal rotating elements, and the shaft. The vane plate, impeller, and seal, which receive the most wear, are easily accessible and can be replaced without disturbing the piping. Maintenance and replacement of these parts will maintain the peak operating efficiency of the pump.

SECTIONAL DRAWING

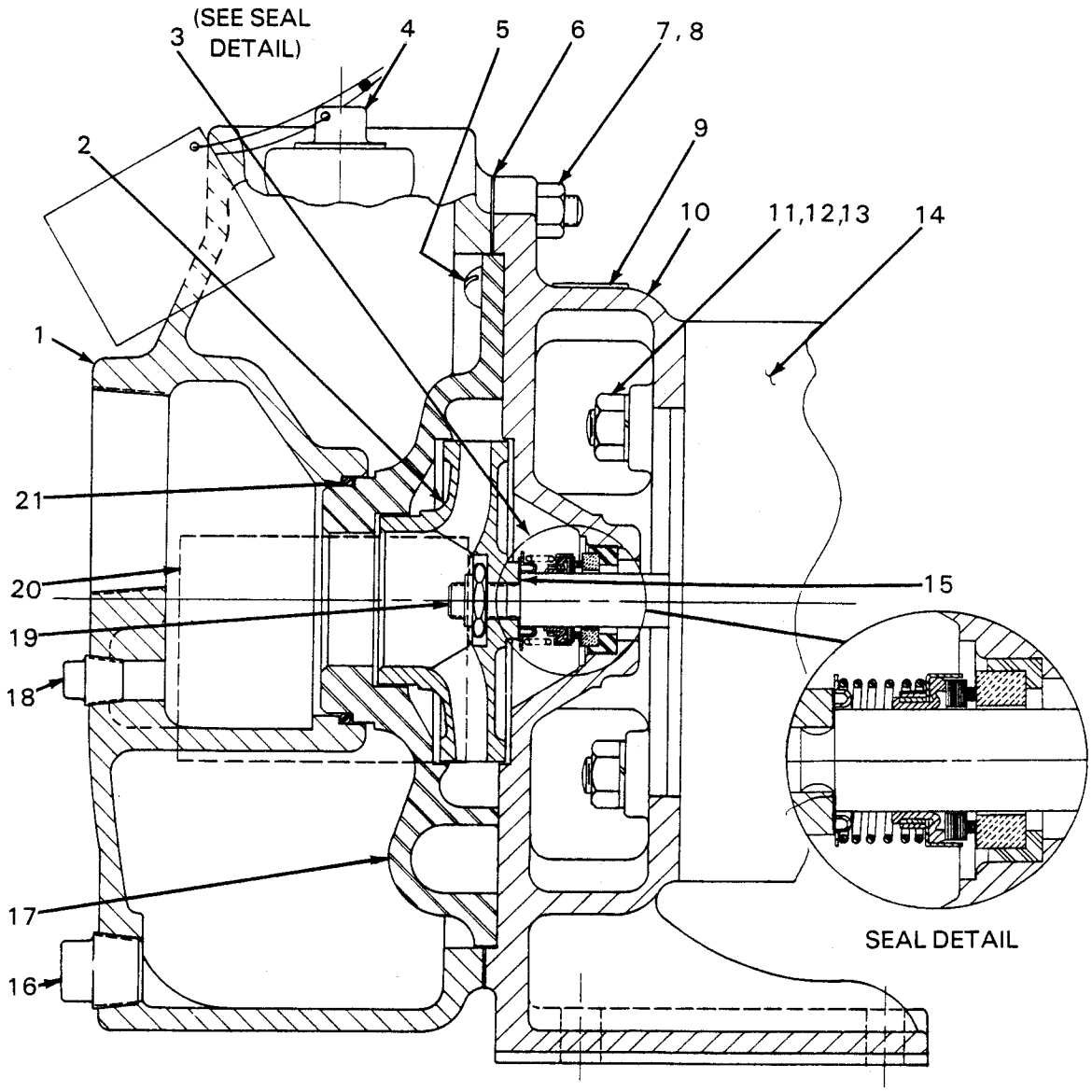

Figure 1. Pump Model O2D3-E2 3P

PARTS LIST

PUMP MODEL 02D3-E2 3P

(From S/N 369911N up)

ITEM NO.	PART NAME	PART NUMBER	MATL CODE	QTY
1	VOLUTE HOUSING	6366	10010	1
2	★IMPELLER	6594	14000	1
3	★SEAL ASSEMBLY	25271-821	—	1
4	FILL PLUG ASSEMBLY	48271-061	—	1
5	ROUND HEAD MACHINE SCREW	X-0402	14990	3
6	★VOLUTE HOUSING GASKET	2958-GB	20000	1
7	STUD	C-0606	15991	8
8	HEX NUT	D-06	15991	8
9	DIRECTION PLATE	2613-BM	00000	1
10	★INTERMEDIATE	6367	10010	1
11	STUD	C-0606	15991	4
12	HEX NUT	D-06	15991	4
13	LOCKWASHER	J-06	15991	4
14	MOTOR, 2 HP, 3P	M-36	—	1
15	★IMPELLER SHIM SET	5889	17000	1
16	VOLUTE DRAIN PLUG	P-08	11990	1
17	★VANE PLATE	6378	10010	1
18	SUCTION PORT DRAIN PLUG	P-04	11990	1
19	IMPELLER LOCK NUT	DC-07-S	15991	1
20	NAME PLATE	2613-AY	13990	1
21	★VANE PLATE O-RING	S-0949	—	1
NOT SHOWN:				
	STRAINER	2362	24000	1
OPTIONAL:				
	WHEEL KIT	GROUP 30-6A		1

★INDICATES PARTS RECOMMENDED FOR STOCK

Above Serial Numbers Do Not Apply To Pumps Made In Canada.

CANADIAN SERIAL NO. . . . . AND UP

PUMP AND SEAL DISASSEMBLY AND REASSEMBLY

This pump requires little service due to its rugged, minimum-maintenance design. If it becomes necessary to inspect or replace components in and adjacent to the rotating assembly, however, follow these instructions, which are keyed to the sectional view (see figure 1) and the accompanying parts list.

Pump Disassembly

WARNING

Before attempting to open or service the pump:

1. Familiarize yourself with this manual.
2. Disconnect the power source to ensure that the pump will remain inoperative.
3. Allow the pump to cool if overheated.
4. Vent the pump slowly and cautiously.
5. Close the suction and discharge valves.
6. Check the temperature before opening any covers, plates, or plugs.
7. Drain the pump.

Disconnect the power source, making certain that it will remain inoperative while the pump is being serviced, and close all connecting valves.

Remove the volute housing drain plug (16) to drain the pump. Clean and reinstall the plug after the pump has been drained.

For access to the impeller (2) and seal assembly (3), the pump must be opened at the point where the volute housing (1) and the intermediate (10) are joined. Remove the hex nuts (8) securing the volute housing to the intermediate, and separate the assemblies.

Remove the round head machine screws (5) securing the vane plate (17) to the intermediate, and remove the vane plate. The impeller is now accessible.

To remove the impeller, immobilize it by inserting a pry bar or other suitable device between the vanes, and disengage the impeller deformed lock nut (19). Loosen the impeller by prying it in the direction of pump rotation; use caution not to damage the impeller vanes. Use caution when unscrewing the impeller from the shaft; tension on the seal spring will be released as the impeller is removed.

Remove the impeller adjusting shims (15). For ease of reassembly, tag and tie the shims, or measure and record their thickness.

Seal Disassembly

Remove the seal spring seat and spring. Using a stiff wire with a hooked end if necessary, remove the remainder of the seal components.

Clean the intermediate seal cavity and the shaft with a soft cloth soaked in cleaning solvent.

WARNING

Most cleaning solvents are toxic and flammable. Use them only in a well-ventilated area free from excessive heat, sparks, and flame. Read and follow all precautions printed on solvent containers.

Seal Reassembly

The seal is not normally reused because of the high polish on its lapped face, but if it is necessary to reuse the old seal, wash all metallic parts in cleaning solvents and dry thoroughly.

Inspect the seal components for wear, scoring, grooves, and other damage that might cause leakage. If any components are worn, replace the complete seal, never mix old and new seal parts.

CAUTION

This seal is not designed for operation at temperatures above 160°F. Do not use at higher operating temperatures.

See figure 2 for the correct order of installation of seal components.

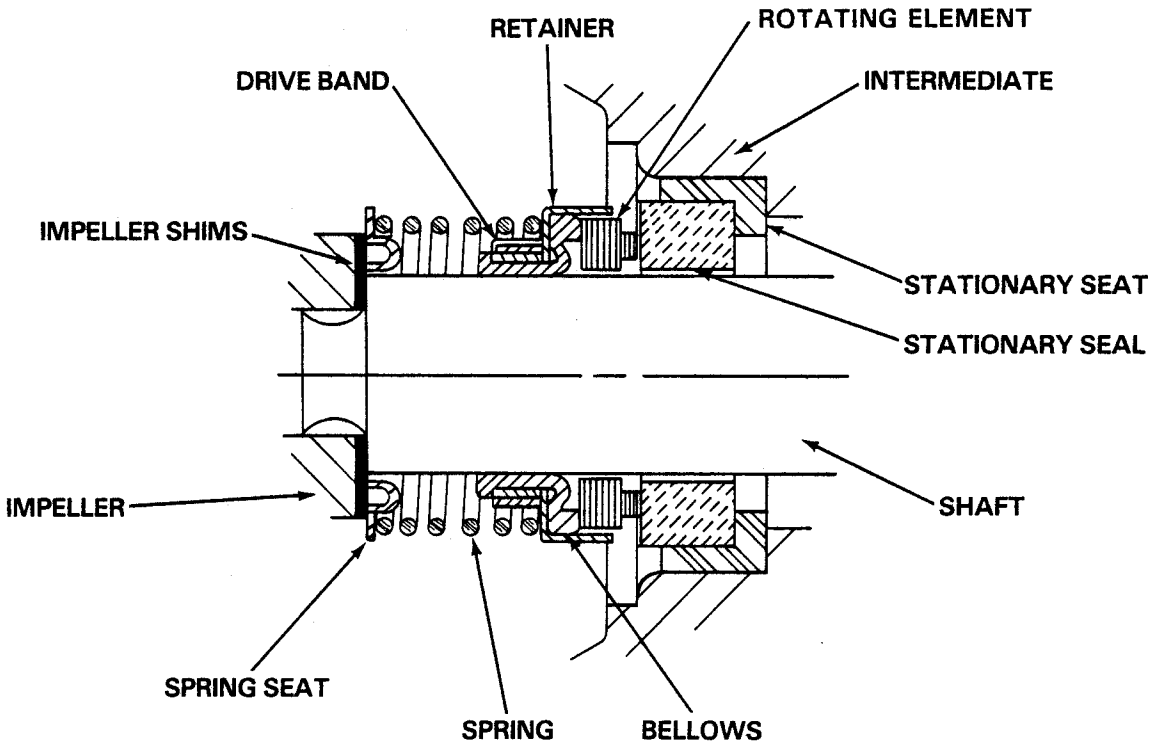

Figure 2. 25271-821 Seal Assembly

Place a drop of light lubricating oil on the lapped faces of the seal.

Install the stationary seat, stationary seal, and rotating element. Lubricate the bellows with soft grease or oil, and install the bellows assembly. Install the seal spring and the spring seat, making certain that all components of the seal are seated squarely.

Pump Reassembly

Install the impeller adjusting shims. A clearance of .008 to .015 inch between the impeller and the intermediate is recommended for maximum pump efficiency. If the same number and thickness of impeller shims are reinstalled as were removed, this clearance should be correct.

Inspect the impeller, and replace it if cracked or badly worn. Install the impeller, and turn the shaft until the impeller is secure. Immobilize the impeller, and install the deformed lock nut.

Measure the clearance between the impeller and the intermediate, and add or remove impeller shims until the clearance falls within the recommended tolerance.

Inspect the vane plate, and replace it if badly scored or worn. Place 3M EC-847 or equivalent sealant between the vane plate and the intermediate, and secure the vane plate to the intermediate.

Replace the volute housing gasket (6) and the vane plate O-ring (21), and secure the intermediate to the volute housing.

Turn the shaft to check that the impeller rotates freely. If it does not, remove additional impeller shims until the impeller rotates freely when the pump is completely assembled.

Remove the fill plug (4), and fill the volute with clean liquid. Clean and reinstall the fill plug. Make certain that the fill plug and all piping are securely tightened before starting the pump.

LUBRICATION

The seal assembly is lubricated by the medium being pumped.

See the motor manufacturer's specifications for motor lubrication.

For U.S. and International Warranty Information,
Please Visit www.grpumps.com/warranty
or call:
U.S.: 419—755—1280
International: +1—419—755—1352

For Canadian Warranty Information,
Please Visit www.grcanada.com/warranty
or call:
519—631—2870

THE GORMAN-RUPP COMPANY • MANSFIELD, OHIO
GORMAN-RUPP OF CANADA LIMITED • ST. THOMAS, ONTARIO, CANADA