INSTALLATION, OPERATION, PARTS LIST, AND MAINTENANCE MANUAL

GORMAN-RUPP

OM-00747-0M01

January 8, 1980

Motor Driven Self-Priming Centrifugal Pump

Model 81 1/2 D11-X 3/4 1P

THE GORMAN-RUPP COMPANY • MANSFIELD, OHIO

GORMAN-RUPP OF CANADA LIMITED • ST. THOMAS, ONTARIO, CANADA

Printed in U.S.A.

Copyright by the Gorman-Rupp Company

This Installation, Operation, and Maintenance Manual is designed specifically to help you get the best performance and longest life from your Gorman-Rupp pump.

This pump is an 80 series, semi-enclosed impeller, self-priming centrifugal model. It is designed for straight-in suction where the medium being pumped enters directly to the impeller eye.

If there are any questions regarding the pump which are not covered in this manual or in other literature accompanying the unit, please contact your Gorman-Rupp distributor, or write:

The Gorman-Rupp Company
P.O. Box 1217
Mansfield, Ohio 44902

Gorman-Rupp of Canada Limited
70 Burwell Road
St. Thomas, Ontario N5P 3R7

For information or technical assistance on the power source, contact the power source manufacturer's local dealer or representative.

The following are used to alert maintenance personnel to procedures which require special attention, to those which could damage equipment, and to those which could be dangerous to personnel:

NOTE

Instructions to aid in installation, operation, or maintenance or which clarify a procedure.

CAUTION

Instructions which must be followed to avoid causing damage to the product or other equipment incidental to the installation. These describe the procedure required and the damage which could result from failure to follow the procedure.

WARNING

Instructions which must be followed to avoid causing injury or death to personnel. These describe the procedure required and the injury which could result from failure to follow the procedure.

TABLE OF CONTENTS

WARNINGS	Section A
INSTALLATION	Section B
OPERATION	Section C
TROUBLESHOOTING	Section D
MAINTENANCE AND REPAIR	Section E
WARRANTY	

WARNINGS

THESE WARNINGS APPLY TO ALL MOTOR DRIVEN PUMPS. REFER TO THE MANUAL ACCOMPANYING THE MOTOR BEFORE ATTEMPTING TO START THE MOTOR.

Before attempting to open or service the pump:

1. Familiarize yourself with this manual.
2. Disconnect the power source to ensure that the pump will remain inoperative.
3. Allow the pump to cool if overheated.
4. Vent the pump slowly and cautiously.
5. Close the suction and discharge valves.
6. Check the temperature before opening any covers, plates, or plugs.
7. Drain the pump.

Do not attempt to pump volatile or corrosive materials for which this pump has not been designed.

After the pump has been located in its operating position, make certain that the pump has been secured before attempting to operate it.

Do not operate the pump without shields and/or guards in place over drive shafts, belts and/or couplings, or other rotating parts. Exposed rotating parts can catch clothing, fingers, or tools, causing severe injury to personnel.

Do not operate the pump against a closed discharge valve for long periods of time. This could bring the liquid to a boil, build pressure, and cause the pump to rupture or explode.

Overheated pumps can cause severe burns and injury. If overheating of the pump casing occurs:

1. Stop the pump immediately.
2. Allow the pump to cool.
3. Refer to instructions in this manual before restarting the pump.

Do not remove plates, covers, gauges, pipe plugs, or fittings from an overheated pump. Vapor pressure within the pump can cause parts being disengaged to be ejected with great force. Allow the pump to cool before servicing.

Do not install and operate a non-explosion proof motor in an explosive atmosphere. Install, connect, and operate the motor in accordance with the National Electric Code and all local codes. If there is a conflict between the instructions in the manual accompanying the unit and the National Electric Code or the applicable local code, the National or local code shall take precedence. All electrical equipment supplied with this pump conformed to applicable federal regulations and national codes in effect on the date of manufacture.

The electric power applied to the motor unit is high enough to cause injury or death. Ground the unit before connecting it to the electrical power supply; never use gas piping as an electrical ground. Be sure to connect the motor to the correct phase and voltage. Do not run the pump if the voltage is not within limits. If the circuit breaker or fuse is tripped, examine the problem before restarting the pump.

INSTALLATION

Seldom are two pump installations identical. The information presented in this section is a summary of the recommended installation practices related to inspection, pump positioning, hardware, suction and discharge piping, and sumps. For further assistance, contact your Gorman-Rupp distributor or the Gorman-Rupp Company.

PREINSTALLATION INSPECTION

The pump assembly was inspected and tested before it was shipped from the factory. Before installation, inspect the pump for damage which may have occurred during shipment. Check as follows:

a. Inspect the pump assembly for cracks, dents, damaged threads, and other obvious damage.

b. Check for and tighten loose bolts, nuts, cap screws, and other attaching hardware. Since gaskets tend to shrink after drying, check for and tighten loose nuts and cap screws securing mating surfaces.

c. Carefully read all tags, decals, and markings on the pump assembly, and perform all duties indicated. Note the direction of rotation indicated on the pump. Check that the pump shaft rotates in the required direction.

CAUTION

Only operate this pump in the direction indicated by the arrow on the pump body and on the accompanying decal. Otherwise, the impeller could become loosened from the shaft and seriously damage the pump.

d. Check all lubricant levels and lubricate as necessary. Refer to the MAINTENANCE AND REPAIR section of this manual.

POSITIONING THE PUMP

Mounting

Locate the pump in an accessible place as close as practical to the liquid to be pumped. Level mounting is essential for proper operation. The pump may have to be supported to provide for level operation or to eliminate vibration.

Lifting

WARNING

Use lifting and moving equipment in good repair and with adequate capacity to prevent injuries to personnel or damage to equipment.

Make sure that hoists and other lifting equipment are of sufficient capacity to safely handle the pump assembly. Attach the lifting mechanism to the bail, eye bolt, or other specific lifting device provided on the pump. If no specific lifting device is provided and chains or cables must be used, make certain that they are positioned so that they will not damage the pump, and so that the load will be balanced.

CAUTION

The pump assembly can be seriously damaged if the cables or chains used to lift and move the unit are improperly wrapped around it.

SUCTION AND DISCHARGE PIPING

Materials

Either pipe or hose may be used for suction and discharge lines, but hose used in suction lines must be the rigid-wall, reinforced type to prevent collapse under suction. Using pipe couplings in suction lines is not recommended.

Line Configuration

Keep suction and discharge lines as straight as possible to minimize friction losses. Make minimum use of elbows and fittings, which substantially increase friction loss. If elbows are necessary, use the long-radius type to minimize friction loss.

Connections to Pump

Never pull a pipe line into place by tightening the flange bolts. The connecting flange must be aligned exactly with the pump port. Lines near the pump must be independently supported to avoid strain on the pump which could cause serious vibration, decreased bearing life, and increased shaft and seal wear. Hose-type lines should have supports strong enough to secure the line when it is filled with liquid and under pressure.

Gauges

Most pumps are drilled and tapped for installing discharge pressure and vacuum suction gauges. If these gauges are desired for pumps that are not tapped, drill and tap the suction and discharge lines close to the pump before installing the lines.

SUCTION LINES

To avoid air pockets which could affect pump priming, the suction line must be as short and direct as possible. When operation involves a suction lift, the line must always slope upward to the pump from the source of the liquid being pumped; if the line slopes down to the pump at any point along the suction run, air pockets will be created.

Fittings

Suction lines should be the same size as the pump inlet. If reducers are used in suction lines, they should be the eccentric type, and should be installed with the flat part of the reducers uppermost to avoid creating air pockets. Valves are not normally used in suction lines, but if a valve is used, install it with the stem down or to either side to avoid air pockets.

Strainers

Install a strainer at the end of the suction line to avoid possible clogging or damage to the pump. The total area of the openings in the strainer should be at least three or four times the cross section of the suction line, but no opening should be larger than the solids handling capability of the pump. Clean the strainer regularly during operation.

Sealing

All connections in the suction line should be sealed with pipe dope to ensure an airtight seal. Even a slight leak will affect priming, head, and capacity, especially when operating with a high suction lift. After installation, inspect the suction line carefully for potential leaks.

DISCHARGE LINES

Throttling Valves

If a throttling valve is desired, install it in the discharge line. Use a valve as large as the largest pipe in the line to minimize friction losses. Never install a throttling valve in the suction line.

Check Valves

A check valve in the discharge line is normally recommended, but is not necessary in low discharge head applications.

With high discharge heads, install a throttling valve and a check valve in the discharge line to protect the pump from excessive shock pressure and reverse rotation when it is stopped.

Bypass Lines

If it is necessary to permit the escape of air to atmosphere during initial priming or in the repriming cycle, install a bypass line between the pump and the discharge check valve. The bypass line should be sized so that it does not affect pump discharge capacity.

Either a Gorman-Rupp automatic air release valve—which will automatically open to allow the pump to prime, and automatically close when priming is accomplished—or a hand-operated shutoff valve should be installed in the bypass line.

NOTE

The bypass line may clog frequently, particularly if the valve remains closed. If this condition occurs, either use a larger bypass line or leave the shutoff valve open during the pumping operation.

Do not terminate the discharge line at a level lower than that of the liquid being pumped unless a siphon breaker is used in the line. Otherwise, a siphoning action could result, causing damage to the pump.

SUCTION LINE POSITIONING

The depth of submergence of the suction line is critical to efficient pump operation. Figure 1 shows recommended minimum submergence vs. velocity.

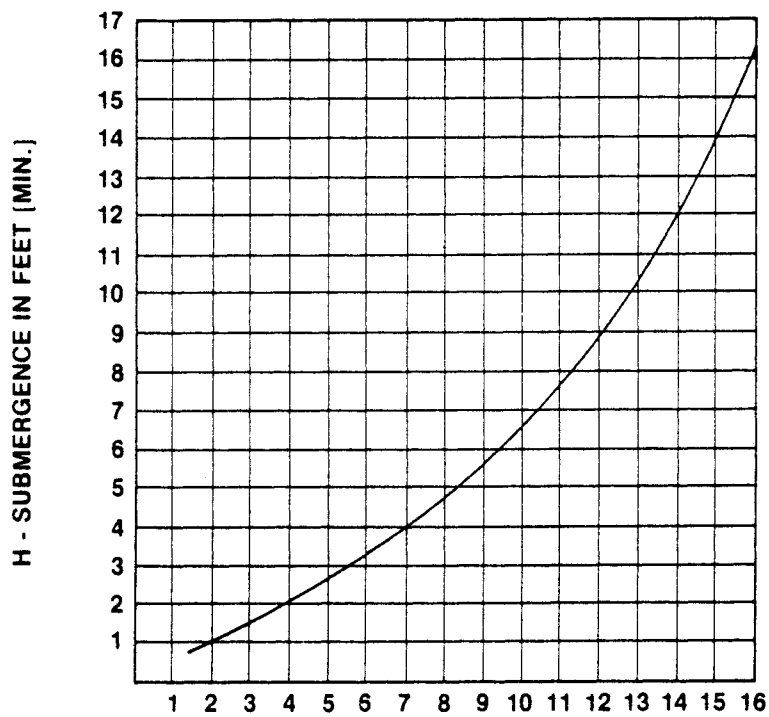

$$\text{VELOCITY IN FEET PER SEC.} = \frac{\text{QUAN. [G.P.M.]} \times .321}{\text{AREA}} \quad \text{OR} \quad \frac{\text{G.P.M.} \times .4085}{D^2}$$

Figure 1. Recommended Minimum Suction Line Submergence Vs. Velocity

Single Suction Lines

Install a single suction line a distance from the wall of the sump equal to one and one-half the size of the suction line. Liquid flow into a sump should never enter near the pump suction inlet because inflow will carry air down into the sump, and air entering the suction line will reduce pump efficiency.

If it is necessary to position an inflow pipe close to the suction inlet, install a baffle a distance from the suction inlet equal to one and one-half the size of the suction line (see figure 2). This baffle will allow entrained air to escape before the liquid is drawn into the suction line.

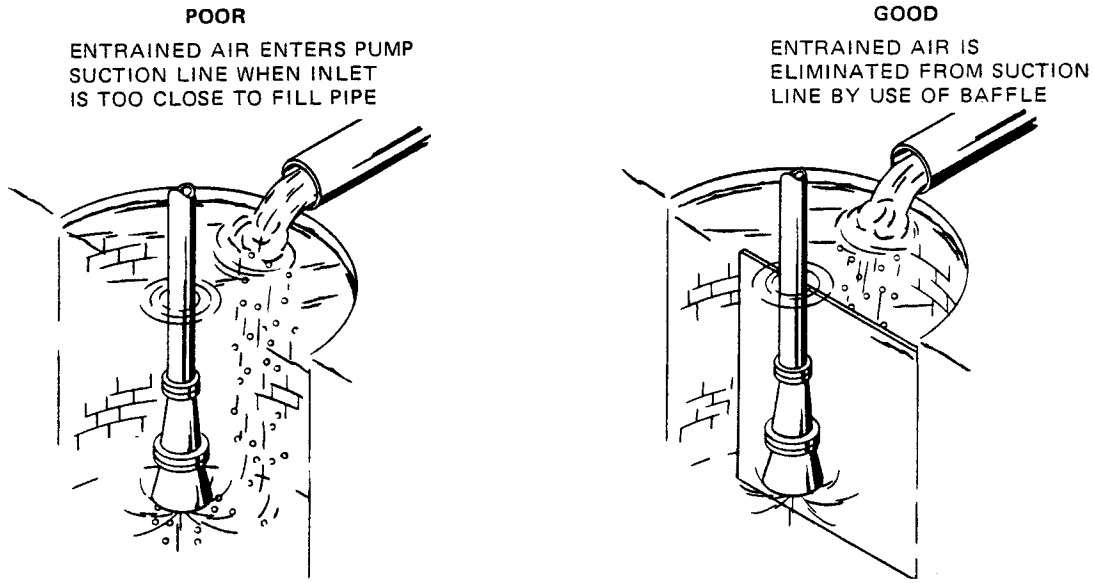

Figure 2. Eliminating Entrained Air Caused by a Fill Pipe

Multiple Suction Lines

When two suction lines are installed in one sump, separate the inlets by at least three times the diameter of the suction pipe. If the suction inlets are too close together, the flow paths may interact, reducing the efficiency of one or both pumps (see figure 3).

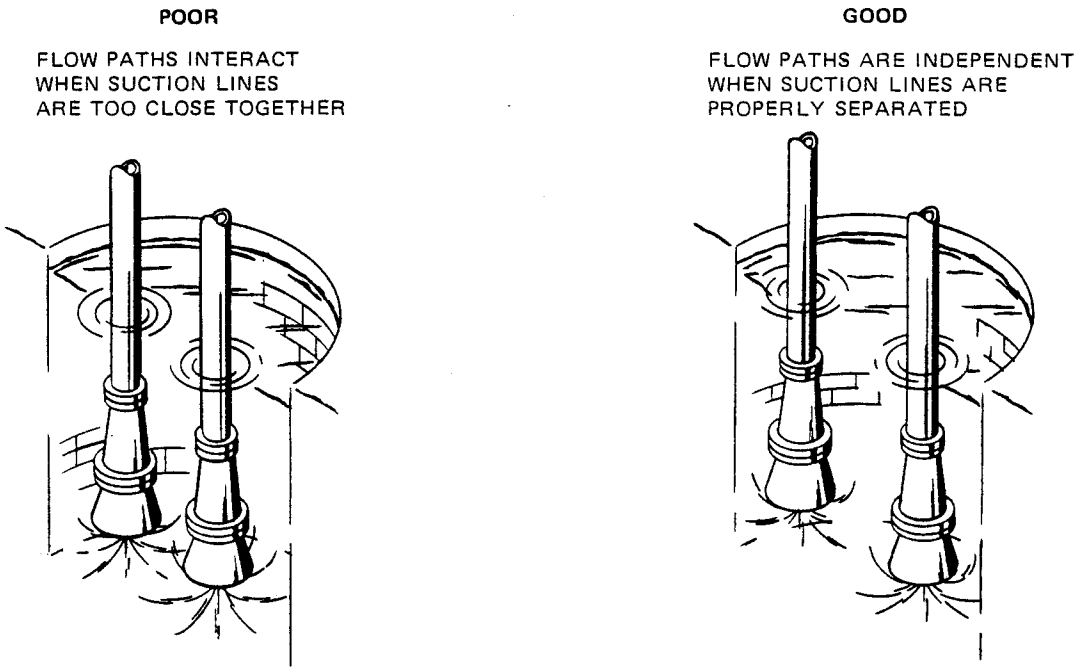

Figure 3. Using Two Pumps in the Same Sump

ALIGNMENT

When this pump is shipped from the Gorman-Rupp factory, the pump and motor are securely attached. The attaching hex nuts may become loosened in transit and handling, however, and should be checked before the pump is put into service.

CAUTION

Before operating this pump, make certain that the hex nuts securing the motor to the intermediate are fully tightened.

OPERATION

WARNING

Do not attempt to pump volatile or corrosive materials for which this pump has not been designed.

PRIMING

Install the pump and piping as described in INSTALLATION. Make sure that the piping connections are tight, and that the pump is securely mounted. Check that the pump is properly lubricated (see LUBRICATION in MAINTENANCE AND REPAIR).

This pump is self priming, but the pump volute casing must first be filled with liquid if:

1. The pump is being put into service for the first time.
2. The pump has not been used for a considerable length of time.
3. The liquid in the volute casing has evaporated.

Once the volute casing has been filled, the pump will prime and reprime as necessary.

CAUTION

Never operate a self-priming pump unless the volute is filled with liquid. The pump will not prime when dry. Extended operation of a dry pump will destroy the seal assembly.

To fill the pump, remove the volute fill cover or fill plug at the top of the casing and add clean liquid until the pump is filled. Replace the fill cover or fill plug before operating the pump.

STARTING

Consult the operating manual furnished with the power source.

Rotation

The correct direction of pump rotation is indicated by an arrow on the pump body and on the accompanying decal. If the pump is operated in the wrong direction, the impeller could become loosened and the pump damaged.

CAUTION

Only operate this pump in the direction indicated by the arrow on the pump body and on the accompanying decal. Otherwise, the impeller could become loosened from the shaft and seriously damage the pump.

When checking the rotation of a pump driven by a three-phase electric motor, start the pump for a moment to see if the rotation is correct. If the shaft, coupling, or V-belt is not visible, rotation can usually be determined by observing the motor cooling fan. If the rotation is incorrect, have qualified personnel interchange any two of the three-phase wires to change direction.

Lines With a Bypass

Either a Gorman-Rupp automatic air release valve or a hand operated shutoff valve may be installed in a bypass line.

If a Gorman-Rupp automatic air release valve has been installed, close the throttling valve in the discharge line. The Gorman-Rupp valve will automatically open to allow the pump to prime, and automatically close when priming has been accomplished. After the pump has been primed, and liquid is flowing steadily from the bypass line, open the discharge throttling valve.

If a hand operated shutoff valve has been installed, close the throttling valve in the discharge line, and open the bypass shutoff valve so that the pump will not have to prime against the weight of the liquid in the discharge line. When the pump has been primed, and liquid is flowing steadily from the bypass line, close the bypass shutoff valve and open the discharge throttling valve.

Lines Without a Bypass

Open all valves in the discharge line and start the power source. Priming is indicated by a positive reading on the discharge pressure gauge or by quieter operation. The pump may not prime immediately because the suction line must first fill with liquid. If the pump fails to prime within five minutes, stop it and check the suction line for leaks.

After the pump has been primed, partially close the discharge line throttling valve in order to fill the line slowly and guard against excessive shock pressure which could damage pipe ends, gaskets, sprinkler heads, and any other fixtures connected to the line. When the discharge line is completely filled, adjust the throttling valve to the required discharge flow rate.

Leakage

No leakage should be visible at pump mating surfaces, or at pump connections or fittings. Keep all line connections and fittings tight to maintain maximum pump efficiency.

Overheating

Overheating can occur if the valves in the suction or discharge lines are closed. Operating against closed valves could bring the liquid to a boil, build pressure, and cause the pump to rupture or explode. If overheating occurs, stop the pump and allow it to cool before servicing it. Refill the volute casing with cool liquid.

WARNING

Do not remove plates, covers, gauges, pipe plugs, or fittings from an overheated pump. Vapor pressure within the pump can cause parts being disengaged to be ejected with great force. Allow the pump to cool before servicing.

Strainer Check

Check the suction strainer regularly during pump operation, or if the pump flow rate begins to drop, and clean it as necessary. Be especially alert for unusual noises when pumping liquids containing solids.

Pump Vacuum Check

Install a vacuum gauge in the system, using pipe dope on the threads.

The pump should pull a vacuum of 20 inches or more of mercury at operating speed with the suction line blocked. If it does not, check for air leaks in the seal or gaskets.

With the pump primed and at operating speed, and the suction line open, read the vacuum gauge. Shut off the pump, keep the vacuum line open, and read the gauge again to see if the vacuum remains at the maximum developed by the pump. If the vacuum falls off rapidly, an air leak exists. If the liquid level at the source of supply remains at a constant level, check to make certain that the air leak is not from the vacuum gauge connection.

STOPPING

After stopping the pump, disconnect the power source to ensure that the pump will remain inoperative.

In below freezing conditions, drain the pump to prevent damage from freezing. Also, clean out any solids by flushing with a hose. Operate the pump for approximately one minute; this will remove any remaining liquid that could freeze the pump rotating parts.

If the pump will be idle for more than a few hours, or if it has been pumping liquids containing a large amount of solids, drain the pump, and flush it thoroughly with clean water. To prevent large solids from clogging the drain port and preventing the pump from completely draining, operate the pump during the draining process. Clean out any remaining solids by flushing with a hose.

TROUBLESHOOTING

WARNING

Before attempting to open or service the pump:

1. Consult pump service manual.
2. Disconnect the power source to ensure that the pump will remain inoperative.
3. Allow pump to cool if overheated.
4. Close suction and discharge valves.
5. Drain pump.

Trouble	Possible Cause	Probable Remedy
PUMP FAILS TO PRIME	Air leak in suction line.	Correct leak.
	Lining of suction hose collapsed.	Replace suction hose.
	Suction check valve clogged or binding.	Clean valve.
	Leaking or worn seal or pump gasket.	Check pump vacuum. Replace leaking or worn seal or gasket.
	Suction lift or discharge head too high.	Check piping installation and install bypass line if needed. See INSTALLATION.
PUMP STOPS OR FAILS TO DELIVER RATED FLOW OR PRESSURE	Air leak in suction line.	Correct leak.
	Suction intake not submerged at proper level or sump too small.	Check installation and correct as needed. Check submergence chart (Section B, page 4).
	Lining of suction hose collapsed.	Replace suction hose.
	Impeller or other wearing parts worn or damaged.	Check impeller clearance. Replace worn parts as needed.
	Impeller clogged.	Free impeller of debris.
	Pump speed too slow.	Check driver output.
	Discharge head too high.	Install bypass line.
	Suction lift too high.	Reduce suction lift.

Trouble	Possible Cause	Probable Remedy
PUMP STOPS OR FAILS TO DELIVER RATED FLOW OR PRESSURE (cont)	Leaking or worn seal or pump gaskets.	Check pump vacuum. Replace leaking or worn seal or pump gaskets.
PUMP REQUIRES TOO MUCH POWER	Pump speed too high.	Check driver output.
	Discharge head too low.	Adjust discharge valve.
	Liquid solution too thick.	Dilute if possible.
PUMP CLOGS FREQUENTLY	Discharge flow too slow.	Open discharge valve fully to increase flow rate, and run engine at maximum governed speed.
	Suction check valve clogged or binding.	Free valve, and clean or replace it.
EXCESSIVE NOISE	Cavitation in pump.	Reduce suction lift and/or friction losses in suction line.
	Pumping entrained air.	Locate and eliminate source of air bubble.
	Pump or drive not securely mounted.	Secure mounting hardware.
	Impeller clogged or damaged.	Clean out debris; replace damaged parts.

Motor Driven Self-Priming Centrifugal Pump

Model 81 1/2 D11-X 3/4 1P

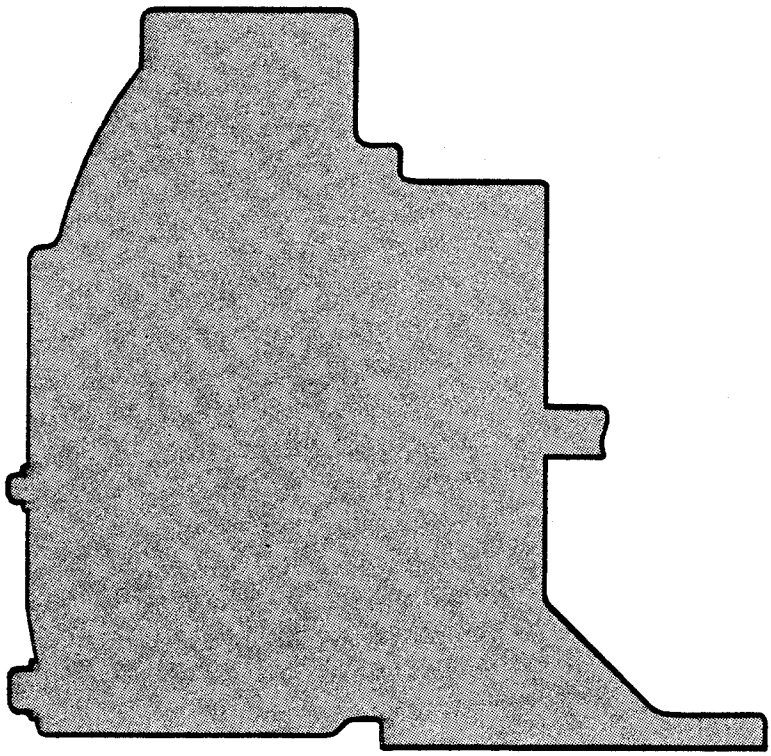

The only moving parts of this pump are the impeller, seal rotating elements, and shaft. The vane plate, impeller, and seal, which receive the most wear, are easily accessible, and can be replaced without disturbing the volute piping. Maintenance and replacement of these three parts will maintain the peak operating efficiency of the pump.

SECTIONAL DRAWING

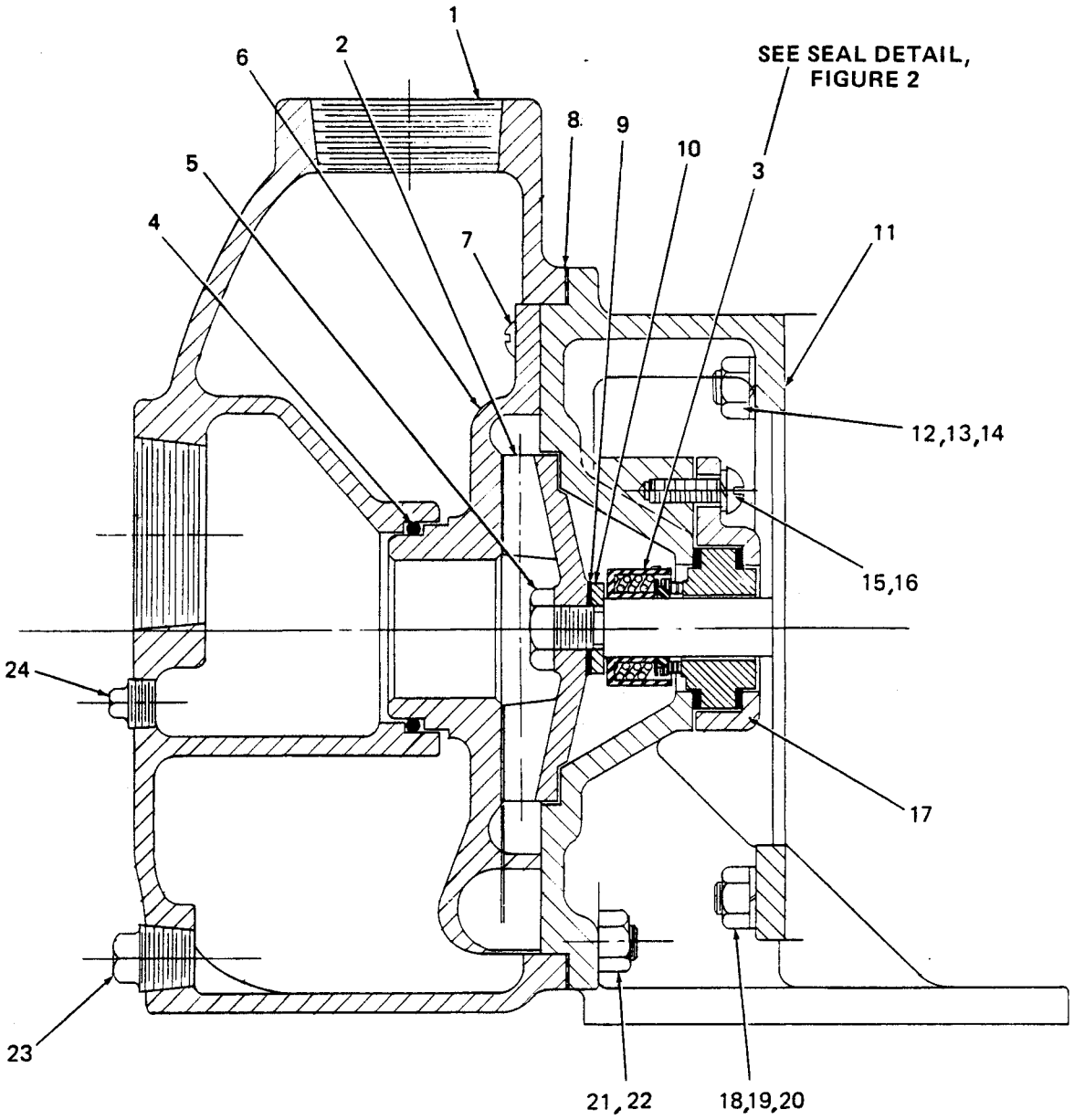

Figure 1. Pump Model 81½ D11-X ¾ 1P

PARTS LIST

ITEM NO.	MODEL 81½ D11-X ¾ 1P PART NAME	PART NUMBER	MATERIAL CODE	NO. REQ.
1	VOLUTE CASING	6477	10010	1
2	☆ IMPELLER	6479	14010	1
3	☆ SEAL ASSEMBLY	S-1219		1
4	☆ VANE PLATE O-RING	S-1477		1
5	☆ IMPELLER LOCKNUT	DC-07-S	15991	1
6	☆ VANE PLATE	6478	10010	1
7	ROUND HEAD MACHINE SCREW	X-0302	14990	2
8	☆ VOLUTE GASKET	6103-GB	19210	1
9	☆ IMPELLER SHIM SET	5889	17000	1
10	☆ SEAL WASHER	6087	14110	1
11	INTERMEDIATE	6103-C	10010	1
12	STUD	C-0606	15991	2
13	HEX NUT	D-06	15991	2
14	LOCKWASHER	J-06	15991	2
15	LOCKWASHER	J-04	15991	3
16	ROUND HEAD MACHINE SCREW	X-0403	15991	3
17	☆ SEAL CAP	7166	10010	1
18	STUD	C-0605	15991	4
19	LOCKWASHER	J-06	15591	4
20	HEX NUT	D-06	15991	4
21	STUD	C-0605	15991	4
22	HEX NUT	D-06	15991	4
23	VOLUTE DRAIN PLUG	P-06	11990	1
24	SUCTION PORT DRAIN PLUG	P-04	11990	1
NOT SHOWN:				
	MOTOR	M-09		1
	CONDUIT BOX	27144-103		1
	OPTIONAL WHEEL KIT	GRP30-6A		

☆ Indicates parts recommended for stock

Note: This parts list applies to pumps from serial no. 256912.

Above serial numbers do not apply to pumps made in Canada.

CANADIAN SERIAL NO. . . . . AND UP

PUMP AND SEAL DISASSEMBLY AND REASSEMBLY

This pump requires little service due to its rugged, minimum-maintenance design. If it becomes necessary to inspect and/or replace the wearing parts, however, follow these instructions, which are keyed to the sectional view (see figure 1) and the accompanying parts list.

Pump Disassembly

Disconnect the power source, making certain that it will remain inoperative while the pump is being serviced, and close all connecting valves. Remove the volute drain plug (23) to drain the pump.

Remove the hex nuts (22) securing the volute casing (1) to the intermediate (11). Separate the assemblies, and separate the vane plate (6) from the intermediate by removing the round head machine screws (7). Inspect the vane plate, and replace it if scored or worn.

To loosen the impeller (2), immobilize it by placing a block of wood between the vanes. Remove the impeller locknut (5), and hand turn the shaft counter to the direction of pump rotation. Unscrew the impeller, and replace it if cracked or badly worn.

Remove the impeller adjusting shims (9). For ease of reassembly, tag and tie the shims, or measure and record their thickness. Remove the seal washer (10).

Seal Disassembly

There are three set screws around the circumference of the seal retainer. These screws secure the seal to the shaft and ensure proper spring tension. **Do not loosen these set screws until the position of the impeller end of the seal retainer on the shaft has been lightly scribed, or measured.**

Loosen the seal retainer set screws, using an allen wrench. (Clearance between the seal retainer and the intermediate is limited, and it may be necessary to grind down the head of the wrench.) Slide the seal — with the exception of the stationary seal seat and gaskets — off the shaft, using a stiff wire with a hooked end if necessary.

Remove the hex nuts (13) and lockwashers (14) securing the intermediate and motor, and slide the intermediate, stationary seal seat, and seal cap off the shaft.

To remove the stationary seat and gaskets, remove the round head machine screws (16) and washers (15) securing the seal cap to the intermediate. Remove the seal cap, and set aside the stationary seat and washers.

Clean the intermediate cavity, the seal cap cavity, and the shaft with a soft cloth soaked in cleaning solvent.

WARNING

Most cleaning solvents are toxic and flammable. Use them only in a well-ventilated area free from excessive heat, sparks, and flame. Read and follow all precautions printed on solvent containers.

Seal Reassembly

The seal is not normally reused because of the high polish on its lapped faces, but if it is necessary to reuse the old seal, wash all metallic parts in cleaning solvent and dry thoroughly.

Inspect the seal components for wear, scoring, grooves, and other damage that might cause leakage. If any components are worn, replace the complete seal; never mix old and new seal parts.

CAUTION

This seal is not designed for operation at temperatures above 160°F. Do not use at higher operating temperatures.

See figure 2 for the correct order of installation of seal components.

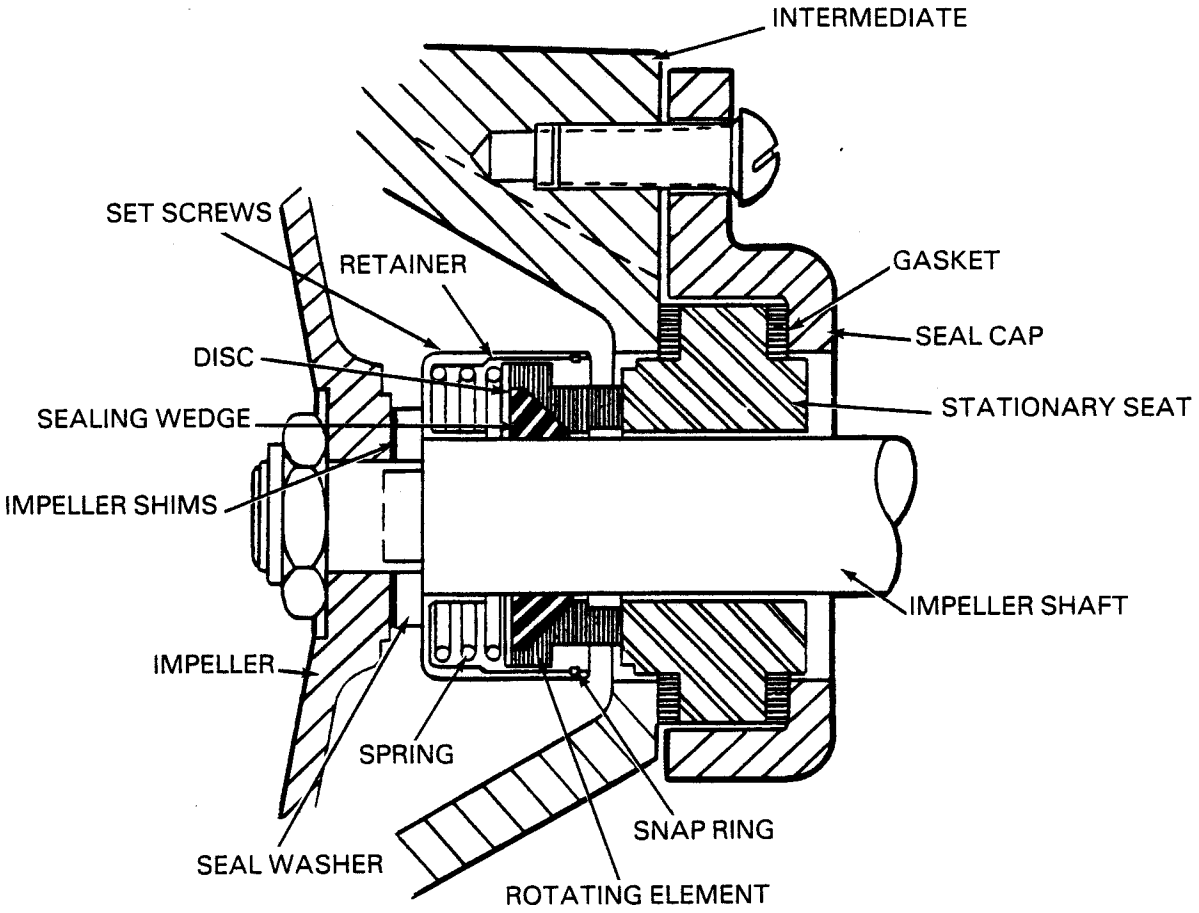

Figure 2. S-1219 Seal Assembly

Place a drop of light lubricating oil on the lapped faces of the seal.

If the old seal assembly is being reinstalled: Install the stationary seat and gaskets in the seal cap cavity, and secure the seal cap to the intermediate. Position the intermediate on the shaft, and secure it to the motor.

If a new replacement seal assembly is being installed: Install the stationary seat and gaskets in the seal cap cavity, and secure the seal cap to the intermediate. Position the intermediate on the shaft, and secure it to the motor.

Lubricate the wedge and disc with soft grease or oil, and slide the balance of the new seal assembly onto the shaft. The balance of the new seal assembly is furnished with restraining clips which keep the seal spring under proper tension. Refer to the scribe line or measurement made before the set screws were loosened and the old seal was removed, position the balance of the seal assembly accordingly, and tighten the set screws. **After the set screws have been tightened, remove and discard the seal restraining clips.**

CAUTION

Be certain to remove the seal spring restraining clips before proceeding with pump reassembly. If the pump is operated with these clips in place, serious damage to both the seal assembly and the pump could result.

Pump Reassembly

Reassemble the seal washer (10), impeller adjusting shims, and impeller, and tighten the impeller locknut.

Use 3M-EC-847 sealant, or equivalent, between the vane plate and the intermediate. Reassemble the vane plate to the intermediate, and the intermediate to the volute casing, replacing the volute gasket (8) and the vane plate O-ring (4). A clearance of .008 to .015 inch between the impeller and the vane plate is recommended for maximum pump efficiency. This clearance can be reached by adding or subtracting shims in the impeller shim set until the impeller binds against the vane plate when the shaft is turned by hand. After the impeller binds, remove .010 inch of shims.

Before starting the pump, clean and reinstall the volute drain plug, and fill the volute with liquid.

LUBRICATION

Seal Assembly

This seal is lubricated by the medium being pumped.

For U.S. and International Warranty Information,
Please Visit www.grpumps.com/warranty
or call:
U.S.: 419—755—1280
International: +1—419—755—1352

For Canadian Warranty Information,
Please Visit www.grcanada.com/warranty
or call:
519—631—2870

THE GORMAN-RUPP COMPANY • MANSFIELD, OHIO
GORMAN-RUPP OF CANADA LIMITED • ST. THOMAS, ONTARIO, CANADA