CD

OM-00571-OB01
JUNE 11, 1979
Rev. B 10/22/99

INSTALLATION, OPERATION, AND MAINTENANCE MANUAL

WITH PARTS LIST

GORMAN-RUPP PUMPS

10-SERIES PUMP

MODEL
11 1/2A10–B

THE GORMAN-RUPP COMPANY • MANSFIELD, OHIO
GORMAN-RUPP OF CANADA LIMITED • ST. THOMAS, ONTARIO, CANADA Printed in U.S.A.

©Copyright by the Gorman-Rupp Company

TABLE OF CONTENTS

INTRODUCTION I-1

WARNINGS - SECTION A A-1

INSTALLATION - SECTION B B-1
- Pump Dimensions B-1
- PREINSTALLATION INSPECTION B-2
- POSITIONING PUMP B-2
  - Lifting B-2
  - Mounting B-3
  - Clearance B-3
- SUCTION AND DISCHARGE PIPING B-3
  - Materials B-3
  - Line Configuration B-3
  - Connections to Pump B-4
  - Gauges B-4
- SUCTION LINES B-4
  - Fittings B-4
  - Strainers B-4
  - Sealing B-5
  - Suction Lines In Sumps B-5
  - Suction Line Positioning B-5
- DISCHARGE LINES B-6
  - Siphoning B-6
  - Valves B-6
  - Bypass Lines B-7
- ALIGNMENT B-7
  - Coupled Drives B-8
  - V-Belt Drives B-9

OPERATION - SECTION C C-1
- PRIMING C-1
- STARTING C-2
- OPERATION C-2
  - Lines With a Bypass C-2
  - Lines Without a Bypass C-2
  - Leakage C-3
  - Liquid Temperature And Overheating C-3
  - Strainer Check C-3
  - Pump Vacuum Check C-4
- STOPPING C-4
  - Cold Weather Preservation C-4
- BEARING TEMPERATURE CHECK C-5

PUMP TROUBLESHOOTING - SECTION D D-1

PUMP MAINTENANCE AND REPAIR - SECTION E E-1
- PERFORMANCE CURVE E-1
- PUMP MODEL - PARTS LIST E-3
- PUMP AND SEAL DISASSEMBLY AND REASSEMBLY E-4
  - Suction Check Valve Removal And Disassembly E-4
  - Back Cover Removal E-5
  - Pump Disassembly E-5
  - Packing Removal E-5
  - Shaft And Bearing Removal And Disassembly E-6
  - Shaft and Bearing Reassembly And Installation E-6
  - Packing Installation E-8
  - Pump Reassembly E-11
  - Back Cover Installation E-12
  - Suction Check Valve Reassembly And Installation E-12
  - Final Packing Adjustment E-12

LUBRICATION E-13
Packing Assembly E-13
Bearings E-13
Power Source E-13

INTRODUCTION

This Installation, Operation, and Maintenance Manual is designed to help you achieve the best performance and longest life from your Gorman-Rupp pump.

This pump is a 10 Series, semi-open impeller, self-priming centrifugal model with a suction check valve. The pump is designed for handling corrosive liquids containing specified entrained solids, residues and slurries. The basic material of construction for wetted parts is type 316 stainless steel.

If there are any questions regarding the pump or its application which are not covered in this manual or in other literature accompanying this unit, please contact your Gorman-Rupp distributor, or write:

The Gorman-Rupp Company P.O. Box 1217 Mansfield, Ohio 44901-1217	or	Gorman-Rupp of Canada Limited 70 Burwell Road St. Thomas, Ontario N5P 3R7

For information or technical assistance on the power source, contact the power source manufacturer's local dealer or representative.

The following are used to alert maintenance personnel to procedures which require special attention, to those which could damage equipment, and to those which could be dangerous to personnel:

NOTE

Instructions to aid in installation, operation, and maintenance or which clarify a procedure.

CAUTION

Instructions which must be followed to avoid causing damage to the product or other equipment incidental to the installation. These instructions describe the requirements and the possible damage which could result from failure to follow the procedures.

WARNING

These instructions must be followed to avoid causing injury or death to personnel, and describe the procedure required and the injury which could result from failure to follow the procedure.

WARNINGS - SECTION A

THESE WARNINGS APPLY TO 10 SERIES BASIC PUMPS. GORMAN-RUPP HAS NO CONTROL OVER OR PARTICULAR KNOWLEDGE OF THE POWER SOURCE WHICH WILL BE USED. REFER TO THE MANUAL ACCOMPANYING THE POWER SOURCE BEFORE ATTEMPTING TO BEGIN OPERATION.

WARNING

Before attempting to open or service the pump:

1. Familiarize yourself with this manual.
2. Lock out or disconnect the power source to ensure that the pump will remain inoperative.
3. Allow the pump to cool if overheated.
4. Vent the pump slowly and cautiously.
5. Close the suction and discharge valves.
6. Check the temperature before opening any covers, plates, or plugs.
7. Drain the pump.

WARNING

This pump is designed to handle corrosive liquids containing specified entrained solids, residues and slurries. Do not attempt to pump volatile or flammable liquids which may damage the pump or endanger personnel as a result of pump failure.

WARNING

After the pump has been positioned, make certain that the pump and all piping connections are tight, properly supported and secure before operation.

WARNING

Do not operate the pump without shields and/or guards in place over the drive shafts, belts and/or couplings, or other rotating parts. Exposed rotating parts can catch clothing, fingers, or tools, causing severe injury to personnel.

WARNING

Do not operate the pump against a closed discharge valve for long periods of time. This could bring the liquid to a boil, build pressure, and cause the pump to rupture or explode.

WARNING

Overheated pumps can cause severe burns and injury. If overheating of the pump occurs:

1. Stop the pump immediately.
2. Allow the pump to cool.
3. Refer to instructions in this manual before restarting the pump.

WARNING

This pump has not been designed to pump corrosive materials. Corrosive liquids could attack pump components resulting in rapid deterioration and failure.

WARNING

This pump is designed to pump materials which could cause serious illness or injury through direct exposure or emitted fumes. Wear protective clothing, such as rubber gloves, face mask, and rubber apron, as necessary before disassembling the pump or piping.

WARNING

Do not remove plates, covers, gauges, pipe plugs, or fittings from an overheated pump. Vapor pressure within the pump can cause parts being disengaged to be ejected with great force. Allow the pump to cool before servicing.

WARNING

```
//////////////////////////////////////////////////////////////
//                                                          //
//  Never run this pump backwards.  Be certain that rotation //
//  is correct before fully engaging the pump.              //
//                                                          //
//////////////////////////////////////////////////////////////
```

INSTALLATION - SECTION B

Since pump installations are seldom identical, this section offers only general recommendations and practices required to inspect, position, and arrange the pump and piping.

Most of the information pertains to a standard **static lift application** where the pump is positioned above the free level of liquid to be pumped.

If installed in a **flooded suction application** where the liquid is supplied to the pump under pressure, some of the information such as mounting, line configuration, and priming must be tailored to the specific application. Since the pressure supplied to the pump is critical to performance and safety, **be sure** to limit the incoming pressure to 50% of the maximum permissible operating pressure as shown on the pump performance curve.

For further assistance, contact your Gorman-Rupp distributor or the Gorman-Rupp Company.

Pump Dimensions

See Figure 1 for the approximate physical dimensions of this pump.

OUTLINE DRAWING

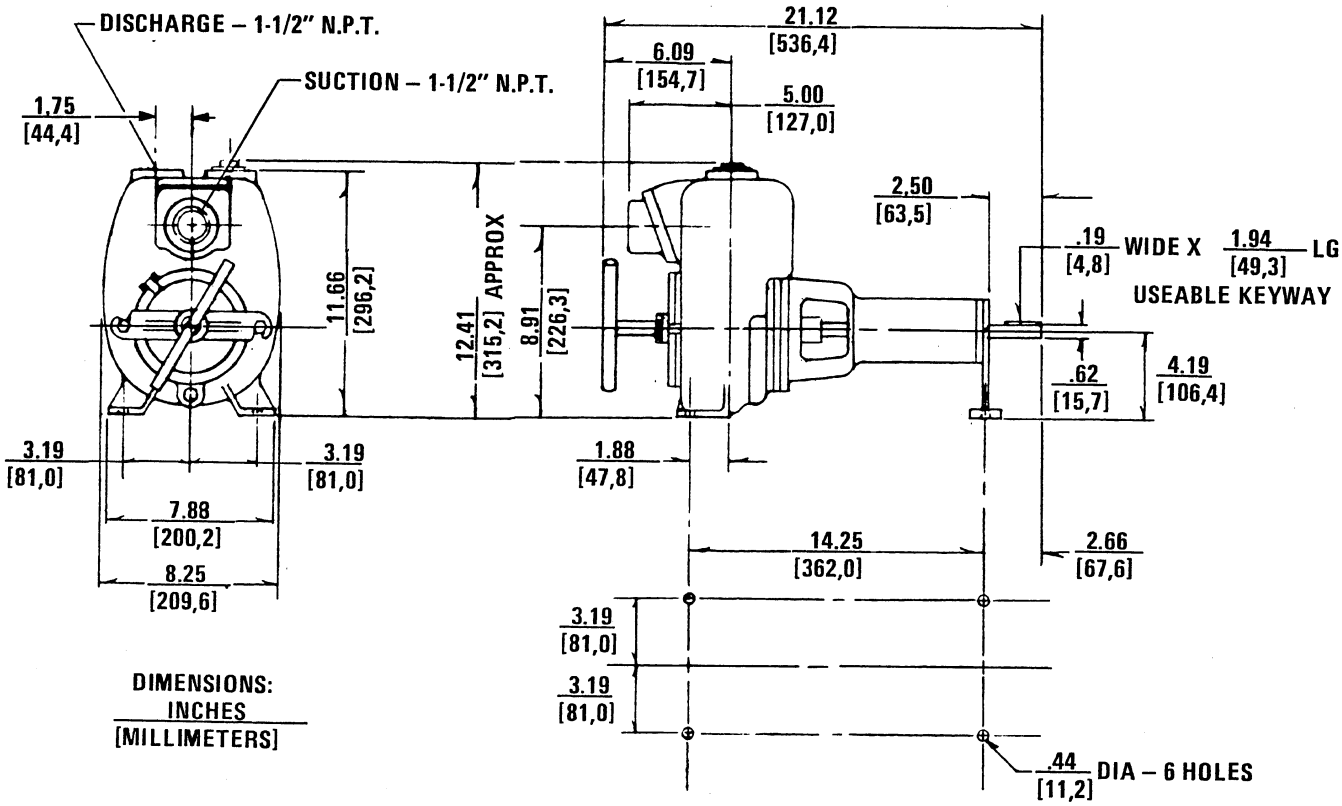

Figure 1. Pump Model 11 1/2A10-B

PREINSTALLATION INSPECTION

The pump assembly was inspected and tested before shipment from the factory. Before installation, inspect the pump for damage which may have occurred during shipment. Check as follows:

a. Inspect the pump for cracks, dents, damaged threads, and other obvious damage.

b. Check for and tighten loose attaching hardware. Since gaskets tend to shrink after drying, check for loose hardware at mating surfaces.

c. Carefully read all warning and cautions contained in this manual, and perform all duties indicated. Note the direction of rotation indicated on the pump. Check that the pump shaft rotates counterclockwise facing the pump suction.

CAUTION

> Only operate this pump in the direction indicated by the arrow on the pump body and on the accompanying decal. Otherwise, the impeller could become loosened from the shaft and seriously damage the pump.

d. Check all lubricant levels and lubricate as necessary. Refer to LUBRICATION in the MAINTENANCE AND REPAIR section of this manual and perform duties as instructed.

e. If the pump and power source have been stored for more than 12 months, some of the components or lubricants may have exceeded their maximum shelf life. These **must be inspected or replaced** to ensure maximum pump service.

If the maximum shelf life on any itemhas been exceeded, or if anything appears to be abnormal, contact your Gorman-Rupp distributor or the factory to determine the repair or updating policy. **Do not** put the pump into service until appropriate action has been taken.

POSITIONING PUMP

Lifting

Use lifting equipment with a capacity of at least **350 pounds**. This pump weighs approximately **70 pounds**, not including the weight of accessories and mounting base with power source. Customer installed equipment such as suction and discharge piping **must** be removed before attempting to lift.

CAUTION

The pump assembly can be seriously damaged if the cables or chains used to lift and move the unit are improperly wrapped around the pump.

Mounting

Locate the pump in an accessible place as close as practical to the liquid being pumped. Level mounting is essential for proper operation. The pump may have to be supported or shimmed to provide for level operation or to eliminate vibration.

Clearance

A minimum clearance of **18 inches** in front of the cover plate is required to permit removal of the cover and easy access to the pump interior.

SUCTION AND DISCHARGE PIPING

Materials

Either pipe or hose may be used for suction and discharge lines; however, the materials must be compatible with the liquid being pumped. If hose is used in suction lines, it must be the rigid-wall, reinforced type to prevent collapse under suction. Using piping couplings in suction lines is not recommended.

Line Configuration

Keep suction and discharge lines as straight as possible to minimize friction losses. Make minimum use of elbows and fittings, which substantially increase friction loss. If elbows are necessary, use the long-radius type to minimize friction loss.

Connections to Pump

Before tightening a connecting flange, align it exactly with the pump port. Never pull a pipe line into place by tightening the flange bolts and/or couplings.

Lines near the pump must be independently supported to avoid strain on the pump which could cause excessive vibration, decreased bearing life, and increased shaft and seal wear. If hose-type lines are used, they should have adequate support to secure them when filled with liquid and under pressure.

Gauges

Most pumps are drilled and tapped for installing discharge pressure and vacuum suction gauges. If these gauges are desired for pumps that are not tapped, drill and tap the suction and discharge lines not less than 18 inches from the suction and discharge ports and install the lines. Installation closer to the pump may result in erratic readings.

SUCTION LINES

To avoid air pockets which could affect pump priming, the suction line must be as short and direct as possible. When operation involves a suction lift, the line must always slope upward to the pump from the source of the liquid being pumped; if the line slopes down to the pump at any point along the suction run, air pockets will be created.

Fittings

Suction lines should be the same size as the pump inlet. If reducers are used in suction lines, they should be the eccentric type, and should be installed with the flat part of the reducers uppermost to avoid creating air pockets. Valves are not normally used in suction lines, but if a valve is used, install it with the stem horizontal to avoid air pockets.

Strainers

If a strainer is furnished with the pump, be certain to use it; any spherical solids which pass through a strainer furnished with the pump will also pass through the pump itself.

If a strainer is not furnished with the pump, but is installed by the pump user, make certain that the total area of the openings in the strainer is at least three or four times the cross section of the suction line, and that the openings will not permit passage of solids larger than the solids handling capability of the pump.

This pump is designed to handle up to 1 inch diameter spherical solids.

Sealing

Since even a slight leak will affect priming, head, and capacity, especially when operating with a high suction lift, all connections in the suction line should be sealed with pipe dope to ensure an airtight seal. Follow the sealant manufacturer's recommendations when selecting and applying the pipe dope. The pipe dope should be compatible with the liquid being pumped.

Suction Lines In Sumps

If a single suction line is installed in a sump, it should be positioned away from the wall of the sump at a distance equal to one and one-half times the diameter of the suction line.

If there is a liquid flow from an open pipe into the sump, the flow should be kept away from the suction inlet because the inflow will carry air down into the sump, and air entering the suction line will reduce pump efficiency.

If it is necessary to position inflow close to the suction inlet, install a baffle between the inflow and the suction inlet at a distance one and one-half times the diameter of the suction pipe. The baffle will allow entrained air to escape from the liquid before it is drawn into the suction inlet.

If two suction lines are installed in a single sump, the flow paths may interact, reducing the efficiency of one or both pumps. To avoid this, position the suction inlets so that they are separated by a distance equal to at least three times the diameter of the suction pipe.

Suction Line Positioning

The depth of submergence of the suction line is critical to efficient pump operation. Figure 2 shows recommended minimum submergence vs. velocity.

NOTE

The pipe submergence required may be reduced by installing a standard pipe increaser fitting at the end of the suction line. The larger opening size will reduce the inlet velocity. Calculate the required submergence using the following formula based on the increased opening size (area or diameter).

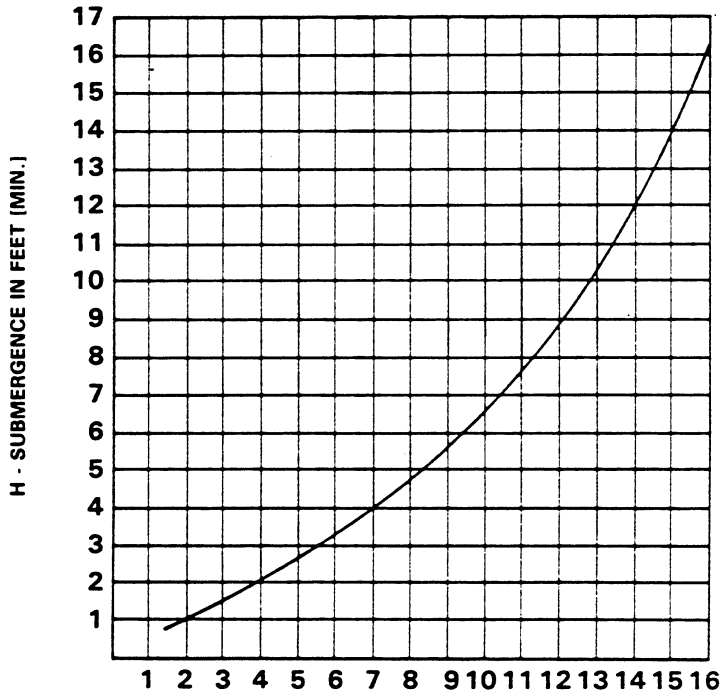

$$\text{VELOCITY IN FEET PER SEC.} = \frac{\text{QUAN. (G.P.M.)} \times .321}{\text{AREA}} \text{ OR } \frac{\text{G.P.M.} \times .4085}{D^2}$$

Figure 2. Recommended Minimum Suction Line Submergence Vs. Velocity

DISCHARGE LINES

Siphoning

Do not terminate the discharge line at a level lower than that of the liquid being pumped unless a siphon breaker is used in the line. Otherwise, a siphoning action causing damage to the pump could result.

Valves

If a throttling valve is desired in the discharge line, use a valve as large as the largest pipe to minimize friction losses. Never install a throttling valve in a suction line.

With high discharge heads, it is recommended that a throttling valve and a system check valve be installed in the discharge line to protect the pump from excessive shock pressure and reverse rotation when it is stopped.

Bypass Lines

If it is necessary to permit the escape of air to atmosphere during initial priming or in the repriming cycle, install a bypass line between the pump and the discharge check valve. The bypass line should be sized so that it does not affect pump discharge capacity.

Either a Gorman-Rupp automatic air release valve - which will automatically open to allow the pump to prime, and automatically close when priming is accomplished - or a hand-operated shutoff valve should be installed in the bypass line.

NOTE

The bypass line may clog frequently, particularly if the valve remains closed. If this condition occurs, either use a larger bypass line or leave the shutoff valve open during the pumping operation.

Do not terminate the discharge line at a level lower than that of the liquid being pumped unless a siphon breaker is used in the line. Otherwise, a siphoning action could result, causing damage to the pump.

ALIGNMENT

The alignment of the pump and its power source is critical for trouble-free mechanical operation. In either a flexible coupling or V-belt driven system, the driver and pump must be mounted so that their shafts are aligned with and parallel to each other. It is imperative that alignment be checked after the pump and piping are installed, and before operation.

NOTE

Check **Rotation**, Section C, before final alignment of the pump.

When mounted at the Gorman-Rupp factory, driver and pump are aligned before shipment. Misalignment will occur in transit and handling. Pumps **must** be checked and realigned before operation. Before checking alignment, tighten the foundation bolts. The pump casing feet and/or pedestal feet, and the driver mounting bolts should also be tightly secured.

WARNING

When checking alignment, disconnect the power source to ensure that the pump will remain inoperative.

CAUTION

Adjusting the alignment in one direction may alter the alignment in another direction. Check each procedure after altering alignment.

Coupled Drives

When using couplings, the axis of the power source must be aligned to the axis of the pump shaft in both the horizontal and vertical planes. Most couplings require a specific gap or clearance between the driving and the driven shafts. Refer to the coupling manufacturer's service literature.

Align spider insert type couplings by using calipers to measure the dimensions on the circumference of the outer ends of the coupling hub every 90 degrees. The coupling is in alignment when the hub ends are the same distance apart at all points (see Figure 3A).

Align non-spider type couplings by using a feeler gauge or taper gauge between the coupling halves every 90 degrees. The coupling is in alignment when the hubs are the same distance apart at all points (see Figure 3B).

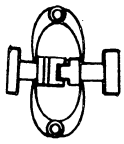

Figure 3A. Aligning Spider-Type Couplings

Figure 3B. Aligning Non-Spider Type Couplings

Check parallel adjustment by laying a straightedge across both coupling rims at the top, bottom, and side. When the straightedge rests evenly on both halves of the coupling, the coupling is in horizontal parallel alignment. If the coupling is misaligned, use a feeler gauge between the coupling and the straightedge to measure the amount of misalignment.

V-Belt Drives

When using V-belt drives, the power source and the pump must be parallel. Use a straightedge along the sides of the pulleys to ensure that the pulleys are properly aligned (see Figure 3C). In drive systems using two or more belts, make certain that the belts are a matched set; unmatched sets will cause accelerated belt wear.

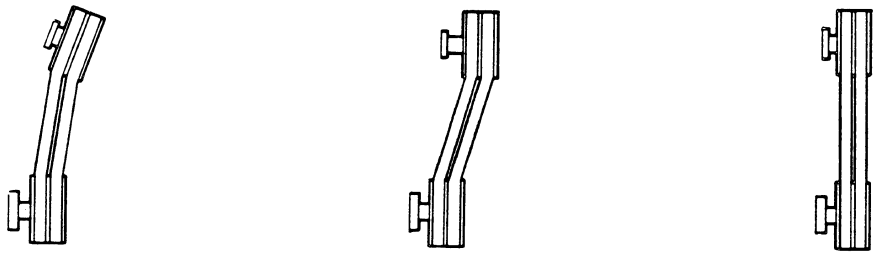

MISALIGNED: SHAFTS NOT PARALLEL

MISALIGNED: SHEAVES NOT IN LINE

ALIGNED: SHAFTS PARALLEL AND SHEAVES IN LINE

Figure 3C. Alignment of V-Belt Driven Pumps

Tighten the belts in accordance with the belt manufacturer's instructions. If the belts are too loose, they will slip; if the belts are too tight, there will be excessive power loss and possible bearing failure. Select pulleys that will match the proper speed ratio; overspeeding the pump may damage both pump and power source.

WARNING

Do not operate the pump without shields and/or guards in place over the drive shafts, belts and/or couplings, or other rotating parts. Exposed rotating parts can catch clothing, fingers, or tools, causing severe injury to personnel.

OPERATION - SECTION C

WARNING

This pump is designed to handle corrosive liquids containing specified entrained solids, residues and slurries. Do not attempt to pump volatile or flammable liquids which may damage the pump or endanger personnel as a result of pump failure.

CAUTION

Pump speed and operating condition points must be within the continuous performance range shown on the curve. (See Section E, Page 1).

PRIMING

Install the pump and piping as described in **INSTALLATION**. Make sure that the piping connections are tight, and that the pump is securely mounted. Check that the pump is properly lubricated (see **LUBRICATION** in **MAINTENANCE AND REPAIR**).

This pump is self-priming, but the pump should never be operated unless there is liquid in the casing.

CAUTION

Never operate a self-priming pump unless there is liquid in the casing. The pump will not prime when dry. Extended operation of a dry pump will destroy the seal assembly.

Add liquid to the pump casing when:

1. The pump is being put into service for the first time.
2. The pump has not been used for a considerable length of time.
3. The liquid in the pump casing has evaporated.

Once the pump casing has been filled, the pump will prime and reprime as necessary.

WARNING

After filling the pump casing, reinstall and tighten the fill plug. Do not attempt to operate the pump unless all connecting piping is securely installed. Otherwise, liquid in the pump forced out under pressure could cause injury to personnel.

To fill the pump, remove the pump casing fill cover or fill plug at the top of the casing and add clean liquid until the pump is filled. Replace the fill cover or fill plug before operating the pump.

STARTING

Consult the operations manual furnished with the power source.

OPERATION

Lines With a Bypass

Either a Gorman-Rupp automatic air release valve or a hand operated shutoff valve may be installed in a bypass line.

If a Gorman-Rupp automatic air release valve has been installed, close the throttling valve in the discharge line. The Gorman-Rupp valve will automatically open to allow the pump to prime, and automatically close when priming has been accomplished. After the pump has been primed, and liquid is flowing steadily from the bypass line, open the discharge throttling valve.

If a hand operated shutoff valve has been installed, close the throttling valve in the discharge line, and open the bypass shutoff valve so that the pump will not have to prime against the weight of the liquid in the discharge line. When the pump has been primed, and liquid is flowing steadily from the bypass line, close the bypass shutoff valve and open the discharge throttling valve.

Lines Without a Bypass

Open all valves in the discharge line and start the power source. Priming is indicated by a positive reading on the discharge pressure gauge or by a quieter operation. The pump may not prime immediately because the suction line must first fill with liquid. If the pump fails to prime within five minutes, stop it and check the suction line for leaks.

After the pump has been primed, partially close the discharge line throttling valve in order to fill the line slowly and guard against excessive shock pres-

sure which could damage pipe ends, gaskets, sprinkler heads, and any other fixtures connected to the line. When the discharge line is completely filled, adjust the throttling valve to the required flow rate.

Leakage

No leakage should be visible at pump mating surfaces, or at pump connections or fittings. Keep all line connections and fittings tight to maintain maximum pump efficiency.

Liquid Temperature And Overheating

The **maximum** liquid temperature for this pump is 212°F. Do not apply it at a higher operating temperature.

Overheating can occur if operated with the valves in the suction or discharge lines closed. Operating against closed valves could bring the liquid to a boil, build pressure, and cause the pump to rupture or explode. If overheating occurs, stop the pump and allow it to cool before servicing it. Refill the pump casing with cool liquid.

WARNING

Do not remove plates, covers, gauges, pipe plugs, or fittings from an overheated pump. Vapor pressure within the pump can cause parts being disengaged to be ejected with great force. Allow the pump to cool before servicing.

Strainer Check

If a suction strainer has been shipped with the pump or installed by the user, check the strainer regularly, and clean it as necessary. The strainer should also be checked if pump flow rate begins to drop. If a vacuum suction gauge has been installed, monitor and record the readings regularly to detect strainer blockage.

Never introduce air or steam pressure into the pump casing or piping to remove a blockage. This could result in personal injury or damage to the equipment. If backflushing is absolutely necessary, **liquid pressure** must be limited to 50% of the maximum permissible operating pressure shown on the pump performance curve.

Pump Vacuum Check

With the pump inoperative, install a vacuum gauge in the system, using pipe dope on the threads. Block the suction line and start the pump. At operating speed the pump should pull a vacuum of 20 inches or more of mercury. If it does not, check for air leaks in the seal, gasket, or discharge valve.

Open the suction line, and read the vacuum gauge with the pump primed and at operating speed. Shut off the pump. The vacuum gauge reading will immediately drop proportionate to static suction lift, and should then stabilize. If the vacuum reading falls off rapidly after stabilization, an air leak exists. Before checking for the source of the leak, check the point of installation of the vacuum gauge.

STOPPING

Never halt the flow of liquid suddenly. If the liquid being pumped is stopped abruptly, damaging shock waves can be transmitted to the pump and piping system. Close all connecting valves slowly. On engine driven pumps, reduce the throttle speed slowly and allow the engine to idle briefly before stopping.

CAUTION

> If application involves a high discharge head, gradually close the discharge throttling valve before stopping the pump.

After stopping the pump, lock out or disconnect the power source to ensure that the pump will remain inoperative.

Cold Weather Preservation

In below freezing conditions, drain the pump to prevent damage from freezing. Also, clean out any solids by flushing with a hose. Operate the pump for approximately one minute; this will remove any remaining liquid that could freeze the pump rotating parts.

If the pump will be idle for more than a few hours, or if it has been pumping liquids containing a large amount of solids, drain the pump, and flush it thoroughly with clean water. To prevent large solids from clogging the drain port and preventing the pump from completely draining, insert a rod or stiff wire in the drain port, and agitate the liquid during the draining process. Clean out any remaining solids by flushing with a hose.

BEARING TEMPERATURE CHECK

Bearings normally run at higher than ambient temperatures because of heat generated by friction. Temperatures up to 160°F are considered normal for bearings, and they can operate safely to at least 180°F.

Checking bearing temperatures by hand is inaccurate. Bearing temperatures can be measured accurately by placing a contact-type thermometer against the housing. Record this temperature for future reference.

A sudden increase in bearing temperatures is a warning that the bearings are at the point of failing to operate properly. Make certain that the bearing lubricant is of the proper viscosity and at the correct level (see LUBRICATION in MAINTENANCE AND REPAIR). Bearing overheating can also be caused by shaft misalignment and/or excessive vibration.

When pumps are first started, the bearings may seem to run at temperatures above normal. Continued operation should bring the temperatures down to normal levels.

PUMP TROUBLESHOOTING - SECTION D

WARNING

Before attempting to open or service the pump:

1. Familiarize yourself with this manual.
2. Lock out or disconnect the power source to ensure that the pump will remain inoperative.
3. Allow the pump to cool if overheated.
4. Vent the pump slowly and cautiously.
5. Close the suction and discharge valves.
6. Check the temperature before opening any covers, plates, or plugs.
7. Drain the pump.

TROUBLE	POSSIBLE CAUSE	PROBABLE REMEDY
PUMP FAILS TO PRIME	Not enough liquid in casing.	Add liquid to casing. See PRIMING.
	Suction check valve contaminated or damaged.	Clean or replace check valve.
	Air leak in suction line.	Correct leak.
	Lining of suction hose collapsed.	Replace suction hose.
	Leaking or worn seal or pump gasket.	Check pump vacuum. Replace leaking or worn seal or gasket.
	Suction lift or discharge head too high.	Check piping installation and install bypass line if needed. See INSTALLATION.
	Strainer clogged.	Check strainer and clean if necessary.
PUMP STOPS OR FAILS TO DELIVER RATED FLOW OR PRESSURE	Air leak in suction line.	Correct leak.
	Suction intake not submerged at proper level or sump too small.	Check installation and correct submergence as needed.

TROUBLE	POSSIBLE CAUSE	PROBABLE REMEDY
PUMP STOPS OR FAILS TO DELIVER RATED FLOW OR PRESSURE(cont.)	Lining of suction hose collapsed.	Replace suction hose.
	Impeller or other wearing parts worn or damaged.	Replace worn or damaged parts. Check that impeller is properly centered and rotates freely.
	Impeller clogged.	Free impeller of debris.
	Pump speed too slow.	Check driver output; check belts or couplings for slippage.
	Discharge head too high.	Install bypass line.
	Suction lift too high.	Measure lift w/vacuum gauge. Reduce lift and/or friction losses in suction line.
	Leaking or worn seal or pump gasket.	Check pump vacuum. Replace leaking or worn seal or gasket.
	Strainer clogged.	Check strainer and clean if necessary.
PUMP REQUIRES TOO MUCH POWER	Pump speed too high.	Check driver output; check that sheaves or couplings are correctly sized.
	Discharge head too low.	Adjust discharge valve.
	Liquid solution too thick.	Dilute if possible.
PUMP CLOGS FREQUENTLY	Discharge flow too slow.	Open discharge valve fully to increase flow rate, and run power source at maximum governed speed.
	Suction check valve or foot valve clogged or binding.	Clean valve.

TROUBLE	POSSIBLE CAUSE	PROBABLE REMEDY
EXCESSIVE NOISE	Cavitation in pump.	Reduce suction lift and/or friction losses in suction line. Record vacuum and pressure gauge readings and consult local representative or factory.
	Pumping entrained air.	Locate and eliminate source of air bubble.
	Pump or drive not securely mounted.	Secure mounting hardware.
	Impeller clogged or damaged.	Clean out debris; replace damaged parts.
BEARINGS RUN TOO HOT	Bearing temperature is high, but within limits.	Check bearing temperature regularly to monitor any increase.
	Low or incorrect lubricant.	Check for proper type and level of lubricant.
	Suction and discharge lines not properly supported.	Check piping installation for proper support.
	Drive misaligned.	Align drive properly.

PUMP MAINTENANCE AND REPAIR - SECTION E

MAINTENANCE AND REPAIR OF THE WEARING PARTS OF THE PUMP WILL MAINTAIN PEAK OPERATING PERFORMANCE.

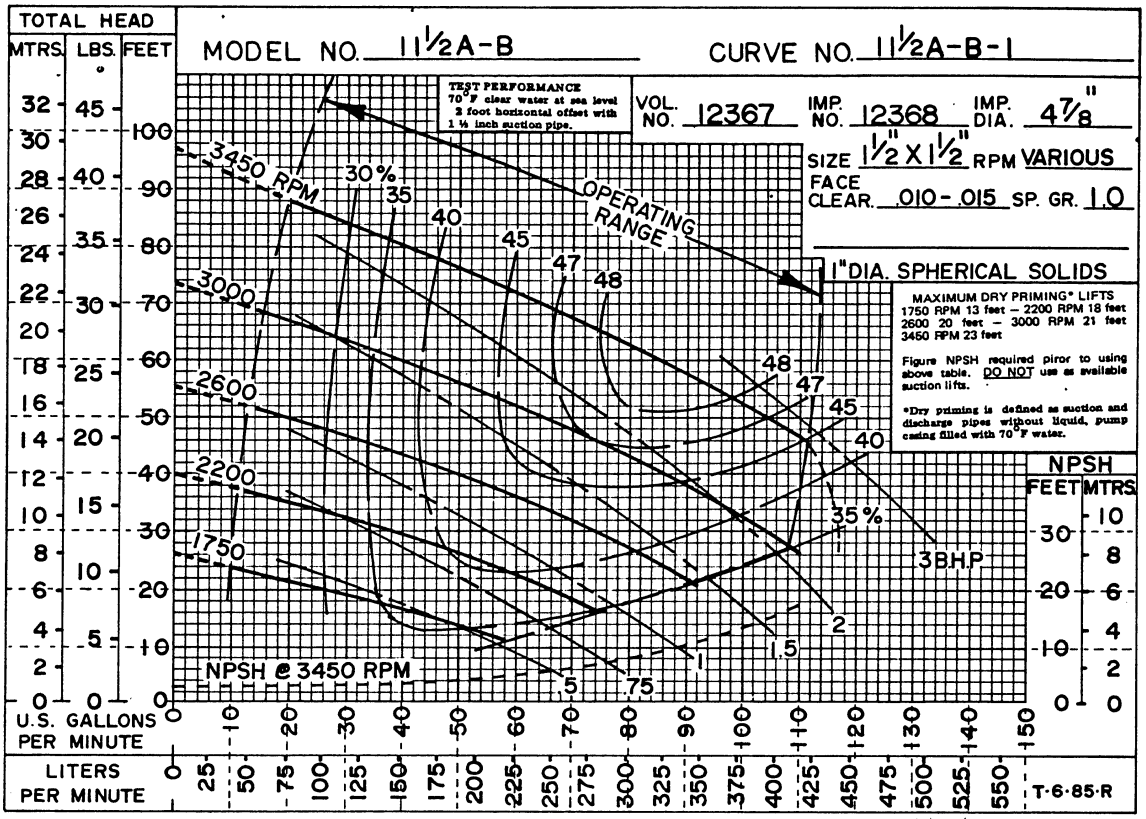

*STANDARD PERFORMANCE FOR PUMP MODEL 11 1/2A10-B

*Based on 70°F clear water at sea level with minimum suction lift. Since pump installations are seldom identical, your performance may be different due to such factors as viscosity, specific gravity, elevation, temperature, and impeller trim.

If your pump serial number is followed by an "N", your pump is **NOT** a standard production model. Contact the Gorman-Rupp Company to verify performance or part numbers.

CAUTION

> Pump speed and operating condition points must be within the continuous performance range shown on the curve. (See Section E, Page 1).

PARTS LIST
Pump Model 11 1/2A10-B
(From S/N 386295 UP)

If your pump serial number is followed by an "N", your pump is NOT a standard production model. Contact the Gorman-Rupp Company to verify part numbers.

ITEM NO.	PART NAME	PART NUMBER	MATL CODE	QTY
1	PUMP CASING	12367B	17070	1
2 *	IMPELLER	12368	17070	1
3 *	LANTERN RING	9003	19250	1
4	ACCESSORY PLUG	P04	17090	1
5	FILL PLUG ASSY	48271-096	---	1
6	NAME PLATE	38818-021	17010	1
7	DRIVE SCREW	BM#04-03	17000	4
8	WARNING PLATE	2613-EV	17090	REF
9	DRIVE SCREW	BM#04-03	17000	REF
10 *	IMP ADJ SHIM SET	6501	17090	1
11 *	SHAFT SLEEVE	2692	17020	1
12 *	PACKING RING	PP0413	22100	4
13	SPLIT GLAND	3226	17070	1
14	GLAND CLIP	3218	17000	2
15	STUD	10176	17090	2
16 *	DEFORM LOCK NUT	DD05	17090	2
17	PIPE NIPPLE	T0210	15079	1
18	PIPE COUPLING	AE02	15079	1
19	PIPE PLUG	P02	15079	1
20 *	SLINGER RING	3228A	19410	1
21	LUBRICATION FITTING	S1404	---	1
22 *	INBRD BALL BRG	S1403	---	1
23	PEDESTAL	8852B	10010	1
24	VENTED PLUG	4823	15079	1
25	ROTATION DECAL	2613M	---	1
26 *	OUTBRD BALL BRG	S1403	---	1
27	LUBRICATION FITTING	S1404	---	1
28	BEARING CAP	8853A	10010	1
29 *	SHAFT KEY	N0307	15990	1
30 *	IMPELLER SHAFT	8856	17130	1
31	HEX HD CAPSCREW	B0404	15991	4
32	LOCKWASHER	J04	15991	4
33	PEDESTAL FOOT	8857	24000	1
34 *	OUTBRD OIL SEAL	S1659	---	1
35 *	BEARING SHIM SET	8540	15990	1
36 *	INBRD OIL SEAL	S1659	---	1
37	STUD	C0607	17090	4
38	HEX NUT	D06	17090	4
39	SEAL PLATE	3225A	17070	1
40 *	CASING GSKT SET	504GC	19410	1
41 *	WEAR PLATE ASSY	2643	17090	1
42	CASING DRAIN PLUG	P06	17090	1
43 *	BACK COVER GSKT	12369GA	19410	1
44	HEX NUT	D04	17090	2
45	LOCKWASHER	J04	17090	2
46	CLAMP BAR	12370	11000	1
47	CLAMP BAR SCREW	8618	24000	1
48	HEX HD CAPSCREW	B0808	17090	2
49	BACK COVER PLATE	12369	17070	1
50	CHECK VALVE ASSY	12514C	---	1
51	-HEX HD CAPSCREW	B0503	17090	1
52	-LOCKWASHER	J05	17090	1
53	-SM VALVE WEIGHT	1354B	17070	1
54 *	-CHECK VALVE	12515G	19370	1
55	-LRG VLV WEIGHT	12515	17190	1
56	SUCTION FLANGE	8599	17070	1
57	STUD	C0606	17090	4
58	HEX NUT	D06	17090	4
59 *	CHECK VALVE GSKT	12512G	19410	1
60	CHECK VALVE SEAL	12512	17190	1
61 *	CHECK VALVE GSKT	12512G	19410	1
NOT SHOWN:				
	SUCTION STICKER	6588AG	---	1
	DISCHARGE STICKER	6588BJ	---	1
OPTIONAL:				
	HI TEMP SHUT-DOWN KITS:			
	120°F	48313-257	---	1
	130°F	48313-256	---	1
	145°F	48313-186	---	1

* INDICATES PARTS RECOMMENDED FOR STOCK

Above Serial Numbers Do Not Apply To Pumps Made In Canada.

CANADIAN SERIAL NO..... AND UP

SECTION DRAWING

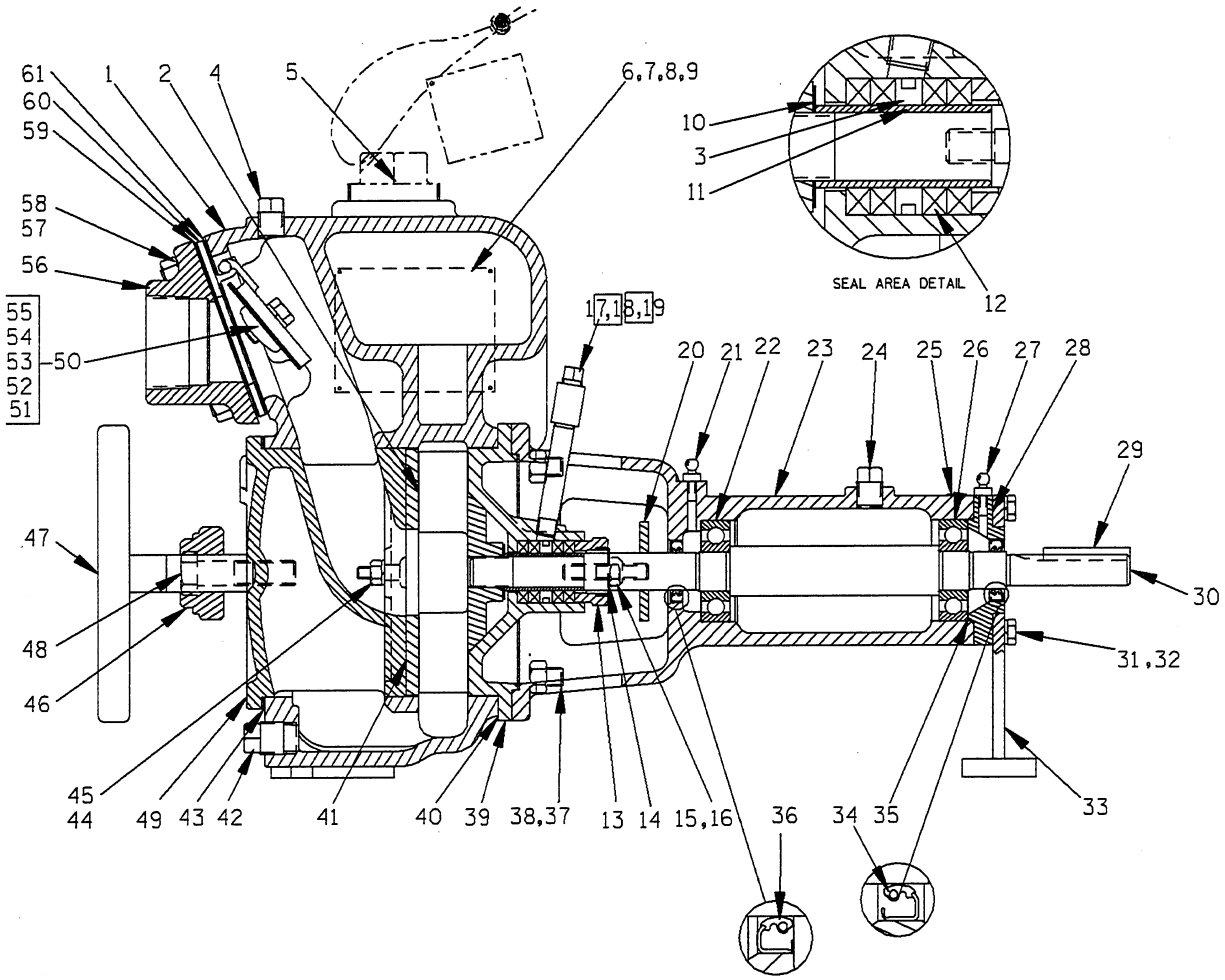

Figure 1. Pump Model 11 1/2A10–B

PUMP AND SEAL DISASSEMBLY AND REASSEMBLY

This pump requires little service due to its rugged, minimum-maintenance design. However, if it becomes necessary to inspect or replace the wearing parts, follow these instructions which are keyed to the sectional view(s) (see Figures 1 and 2) and the accompanying parts list(s).

Before attempting to service the pump, lock out or disconnect the power source to ensure that the power source will remain inoperative and close all valves in the suction and discharge lines.

For power source disassembly and repair, consult the literature supplied with the power source, or contact your local power source representative.

WARNING

Before attempting to open or service the pump:

1. Familiarize yourself with this manual.
2. Lock out or disconnect the power source to ensure that the pump will remain inoperative.
3. Allow the pump to cool if overheated.
4. Vent the pump slowly and cautiously.
5. Close the suction and discharge valves.
6. Check the temperature before opening any covers, plates, or plugs.
7. Drain the pump.

WARNING

This pump is designed to pump materials which could cause serious illness or injury through direct exposure or emitted fumes. Wear protective clothing, such as rubber gloves, face mask, and rubber apron, as necessary before disassembling the pump or piping.

Suction Check Valve Removal And Disassembly

Before attempting to service the pump, remove the casing drain plug (42) and drain the pump. Clean and reinstall the drain plug.

Remove the nuts (58), and separate the suction flange (56), check valve gaskets (59 and 61), check valve seat (60), and check valve assembly (50) from the pump casing (1). Separate the check valve assembly from the check valve seat.

Inspect the check valve parts and replace as required. To disassemble the check valve assembly, remove the hardware (51 and 52) and separate the valve weights (53 and 55) and check valve gasket (54).

Back Cover Removal

The wear plate (41) is easily accessible and may be serviced by removing the back cover (49). Loosen the clamp bar screw (47) and remove the clamp bar (46). Pull the back cover from the casing. Remove the back cover gasket (43) and clean the mating surfaces.

Inspect the wear plate for excessive wear or scoring. If replacement is required, remove the hardware (44 and 45) securing it to the back cover.

Pump Disassembly

Remove the hardware securing the pump casing to the base.

Remove the nuts (38) and slide the casing off the seal plate (39) and pedestal (23). Remove the gasket set (40) from the casing studs. Tie and tag the gasket set for ease of reassembly.

To remove the impeller, tap the vanes with a soft-faced mallet or block of wood in a counterclockwise direction (when facing the impeller). **Be careful** not to damage the impeller vanes.

Remove the impeller adjusting shims (10). Tie and tag the shims for ease of reassembly.

Packing Removal

To remove the seal plate (39) and packing (12), first remove the auxiliary lubrication piping (17, 18 and 19) from the seal plate. Remove the locknuts (16) and clips (14) compressing the split packing gland (13). Remove each half of the split packing gland from the seal plate bore.

Carefully slide the seal plate, shaft sleeve (11) and packing off the shaft. Slide the sleeve out of the seal plate and, if necessary, use a stiff wire with a hooked end to remove the packing and lantern ring (3).

NOTE

> An alternate method of removing the packing without disassembling the pump is to reach through the pedestal opening and remove the hardware and clips securing the split packing gland. Use a stiff wire with a hooked end to remove the packing and lantern ring from the seal plate bore. Make sure all of the old packing is removed before installing the new packing.

If no further disassembly is required, see **Packing Installation**.

Shaft And Bearing Removal And Disassembly

When the pump is properly operated and maintained, the pedestal should not require disassembly. Disassemble the shaft and bearings **only** when there is evidence of wear or damage.

CAUTION

> Shaft and bearing disassembly in the field is not recommended. These operations should be performed only in a properly-equipped shop by qualified personnel.

Remove the pedestal mounting hardware and separate the pedestal from the power source. Remove the slinger ring (20) and shaft key (29).

Disengage the hardware (31 and 32), and remove the pedestal foot (33) from the pedestal. Slide the bearing cap (28) and oil seal (34) off the shaft.

NOTE

> There are no provisions for draining the lubricant from the pedestal. Place a drip pan under the pedestal before disassembly.

Use an arbor (or hydraulic) press and a dowel to remove the oil seal from the bearing cap.

Remove the bearing adjusting shims (35). Tie and tag the shims, or measure and record their thickness for ease of reassembly.

Use a block of wood or a soft-faced mallet to tap against the impeller end of the shaft until the shaft and bearings can be removed from the pedestal.

Use a bearing puller to remove the inboard and outboard bearings (22 and 26) from the shaft.

Press the inboard oil seal (36) from the pedestal.

Shaft and Bearing Reassembly And Installation

Clean the pedestal, shaft and all component parts (except the bearings) with a soft cloth soaked in cleaning solvent. Inspect the parts for wear or damage and replace as necessary.

WARNING

Most cleaning solvents are toxic and flammable. Use them only in a well-ventilated area free from excessive heat, sparks, and flame. Read and follow all precautions printed on solvent containers.

Inspect the shaft for distortion, nicks or scratches or thread damage on the impeller end. Dress small nicks and burrs with a fine file or emery cloth. Replace the shaft if defective.

Clean the bearings thoroughly in **fresh** cleaning solvent. Dry the bearings with filtered compressed air and coat with light oil.

Rotate the bearings by hand to check for roughness or binding and inspect the bearing balls. If rotation is rough or the bearing balls are discolored, replace the bearings.

CAUTION

Bearings must be kept free of all dirt and foreign material. Failure to do so will greatly shorten bearing life. DO NOT spin dry bearings. This may scratch the balls or races and cause premature bearing failure.

The bearing tolerances provide a tight press fit onto the shaft and a snug slip fit into the pedestal. Replace the shaft or pedestal if the proper bearing fit is not achieved.

Press the inboard oil seal (36) into the pedestal with the lip positioned as shown in Figure 1.

Pre-pack the bearings by hand (or use a bearing packer if available) with No. 0 lithium base grease until fully lubricated. Use an arbor (or hydraulic) press to install the bearings on the shaft until fully seated against the shaft shoulders.

CAUTION

When installing the bearings onto the shaft, NEVER press or hit against the outer race, balls, or ball cage. Press ONLY on the inner race.

Push the assembled shaft and bearings into the pedestal from the drive end until the inboard bearing seats against the bore shoulder.

CAUTION

When installing the shaft and bearings into the bearing bore, push against the outer race. NEVER hit the balls or ball cage.

Press the outboard oil seal (34) into the bearing cap (28) with the lip positioned as shown in Figure 1.

Install the same thickness of bearing adjusting shims (19) as previously removed. Slide the bearing cap onto the shaft with the lubrication fitting (27) up, install the pedestal foot (33), and secure with the hardware (31 and 32). **Be careful** not to cut the oil seal lip on the shaft keyway when installing the bearing cap.

NOTE

Shaft endplay should be between .002 and .010 inch. Add or remove bearing adjusting shims to achieve the correct endplay.

Secure the pedestal foot to the base. Install the slinger ring (20) and shaft key (29), and reconnect the power source.

Lubricate the pedestal as indicated in **LUBRICATION** at the end of this section.

Packing Installation

Clean the bore of the seal plate, shaft sleeve, and impeller shaft with a soft cloth soaked in cleaning solvent. Clean and polish the shaft sleeve, or replace it if there are nicks or cuts on either end.

WARNING

Most cleaning solvents are toxic and flammable. Use them only in a well-ventilated area free from excessive heat, sparks, and flame. Read and follow all precautions printed on solvent containers.

Lay the seal plate on a flat surface with the impeller side facing down, and temporarily install the shaft sleeve in the seal plate bore with the chamfered end up.

Install new packing rings into the seal bore as shown in Figure 2.

NOTE

It is recommended that replacement packing rings pre-cut to the correct width and length, and packaged in sets (see parts list), be ordered from The Gorman-Rupp Company or your Gorman-Rupp distributor. However, if bulk commercial packing will be used in this unit, prepare and install it in accordance with the steps outlined below in order to ensure that the packing will form a tight seal.

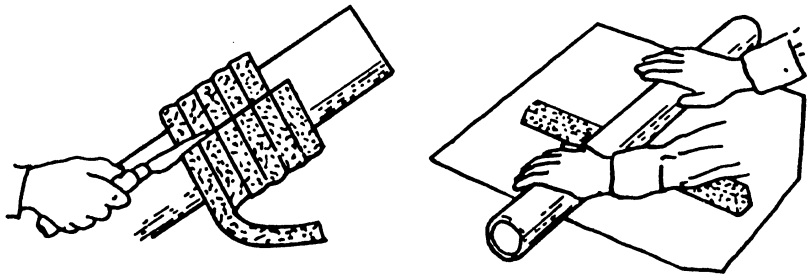

Step 1: Determine how much bulk packing will be required to fill the packing cavity, and wrap it around a rod of the same diameter as the shaft. With the packing wrapped around the rod, cut through each turn as shown.

If the cut rings are too thick and will not fit in the packing cavity, place each turn on a clean newspaper and use a length of pipe, as you would a rolling pin, to roll the ring until the thickness has been reduced. **Never** attempt to flatten a packing ring with a hammer.

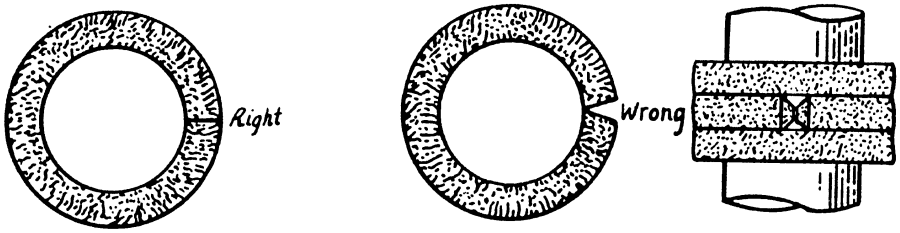

Step 2: It is critical that the ends of the cut packing rings meet in a tight parallel fit to ensure proper sealing. Check this fit; it should be correct if the packing was cut while wrapped around a rod, but if the packing was cut while laid out straight, the ends will meet at an angle. **Never** install a packing ring with an angled gap; pressure on adjacent packing rings will cause them to work into the gap and prevent the angled ring from closing properly around the shaft.

Some channel-type packing with a lead core may require a slight gap between packing ring ends to allow for expansion. Consult the packing manufacturer's installation instructions, and follow his recommendations.

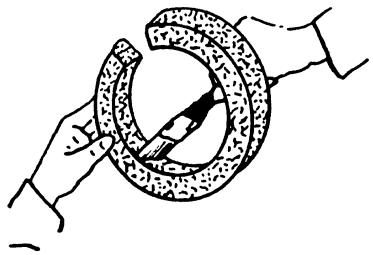

Step 3: Lubricate all metallic packings (foil type, lead core, etc.) with the lubricant recommended by the packing manufacturer. Generally, swabbing the inside diameter of this type packing with SAE No. 30 non-detergent oil provides sufficient lubrication.

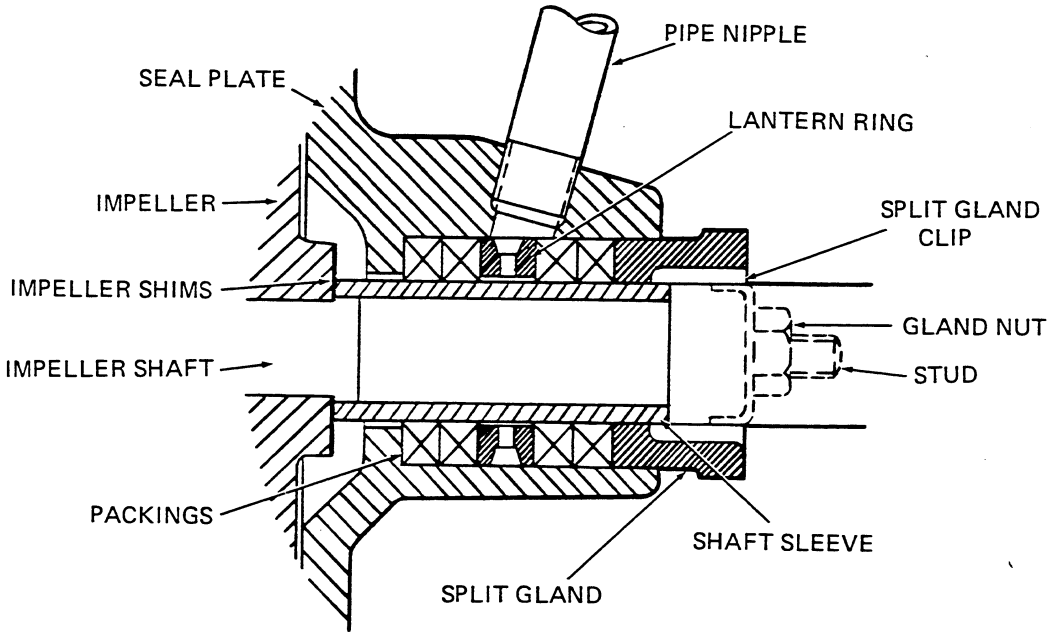

Figure 2. PP0413 Packing Seal Assembly

Dip the new packing rings in non-detergent oil before installation. Push each packing ring into the seal bore and compress it using a blunt ended sleeve (same diameter as packing gland) and mallet. Each successive layer must be compressed and rotated by 90° to prevent excessive leakage. **Be sure** the lantern ring is aligned with the lubrication port when the packing is fully compressed. Add enough packing to fill the seal plate to within 1/4 inch of the end.

Position the assembled seal plate, sleeve, and packing rings on the impeller shaft. Push it on until the seal plate seats against the pedestal, and the chamfered end of the sleeve seats squarely against the shaft shoulder. Align the lubrication hole in the seal plate with the opening in the pedestal. Tempo-

rarily secure the seal plate to the pedestal using two capscrews and nuts (3/8 UNC X 1 1/2 inch long, not supplied).

Install the split packing gland (13) in the seal plate and secure each half with the mounting hardware (15 and 16) and gland clips (14). Draw up the deform locknuts evenly until they are snug, then back off the nuts until they just hold the packing gland set in position.

NOTE

Final packing adjustments should be made after the pump has been reassembled.

Reinstall the auxiliary lubrication piping (17, 18 and 19) in the seal plate.

Pump Reassembly

Inspect the impeller, and replace it if cracked or badly eroded.

Install the same thickness of impeller adjusting shims (10) as previously removed, and screw the impeller onto the shaft until tight. A clearance of .020 to .040 inch between the impeller and the seal plate is necessary for maximum pump efficiency. Measure this clearance, and add or subtract impeller shims until it is reached.

NOTE

Be sure the seal plate is tight against the pedestal while measuring this clearance.

Remove the hardware temporarily securing the seal plate to the pedestal. Install the same thickness of pump casing gaskets (40), as previously removed and secure the pump casing to the seal plate and pedestal with the nuts (38). **Do not** fully tighten the nuts until the impeller face clearance has been set.

NOTE

If the pump has been completely disassembled, it is recommended that the back cover assembly be reinstalled at this time. The back cover assembly must be in place to adjust the impeller face clearance.

A clearance of .008 to .015 inch between the impeller and the wear plate assembly is also recommended for maximum pump efficiency. This clearance can be obtained by adding or subtracting gaskets in the casing gasket set until the impeller binds against the wear plate when the shaft is turned. After the impeller binds, add approximately .012 inch of gaskets.

Secure the pump casing to the base with the previously removed hardware. Be sure to reinstall any leveling shims used under the casing mounting feet.

Back Cover Installation

If the wear plate was removed for replacement, carefully center it on the back cover and secure it with the hardware (44 and 45). The wear plate must be concentric to prevent binding when the back cover is installed.

Clean any debris from the contacting surfaces in the pump casing that might interfere or prevent a good seal with the back cover.

Replace the back cover gasket (43) and slide the back cover (49) into the pump casing.

Secure the back cover assembly with the clamp bar (46) and clamp bar screw (47). Be sure the wear plate does not bind against the impeller.

Suction Check Valve Reassembly And Installation

Assemble the valve weights to each side of the check valve gasket (54) and secure the parts with the hardware (51 and 52). Hang the check valve assembly on the tabs on the check valve seat.

Install the inner check valve gasket (61) on the studs (57). Position the check valve assembly and seat in the suction port, install the outer check valve gasket (59), and suction flange (56). Secure the complete assembly with the nuts (58).

Check the operation of the suction check valve to ensure proper seating and free movement. Reinstall the suction and discharge piping.

Before starting the pump, check that the piping is secure, fill the casing with liquid, and open all valves in the suction and discharge lines.

Final Packing Adjustment

Start the pump and tighten the packing gland nuts evenly while the pump is operating. A slight flow of liquid through the packing (approximately 50 drops per minute) must be maintained for lubrication. Do not over-tighten the gland nuts and cut off this flow. After the gland has been adjusted, stop the pump. The shaft should rotate freely. If it does not, the gland is too tight.

If the old packing has been reinstalled and the flow of liquid through the packing cannot be controlled by adjusting the gland, the old packing must be replaced.

LUBRICATION

Packing Assembly

The packing in the seal plate is lubricated by the liquid being pumped or by a flow of fresh liquid from an external source. When pumping clear liquids, proper lubrication can be achieved by controlling the packing compression (**See Final Packing Adjustment**) to permit a slight flow of liquid through the packings.

When pumping non-lubricating liquids, fresh liquid should be supplied through the auxiliary piping (17, 18 and 19) in the seal plate. Be sure the liquid supplied to the seal is compatible with the liquid being pumped, and that its flow is controlled to prevent dilution.

Bearings

The pedestal was fully lubricated when shipped from the factory. Under normal conditions, add one shot of No. 0 lithium base grease from a grease gun through the grease fittings (21 and 27) after each 250 hours of operation or once each month, whichever comes first. **Do not** over-lubricate. Over-lubrication can cause the bearings to over-heat, resulting in premature bearing failure.

CAUTION

> If grease is forced out around the shaft as new grease is added, the lubrication cavity is full and no more grease should be added at this time.

There are no provisions in the bearing cavity to drain or flush the lubricant. The pump and pedestal must be disassembled to completely clean and maintain this cavity.

Under normal conditions, change the grease after each 5000 hours of operation, or at 12 month intervals, whichever comes first. Change the grease more frequently if the pump is operated continuously or installed in an environment where variable hot and cold temperatures are common.

When lubricating a dry (overhauled) pedestal, fill the cavities through the lubrication fittings with approximately 1/8 of a pound of grease each.

For cold weather operation, consult the factory or a lubricant supplier for the recommended grade of lubricant.

Power Source

Consult the literature supplied with the power source, or contact your local power source representative.

For U.S. and International Warranty Information,
Please Visit www.grpumps.com/warranty
or call:
U.S.: 419—755—1280
International: +1—419—755—1352

For Canadian Warranty Information,
Please Visit www.grcanada.com/warranty
or call:
519—631—2870

THE GORMAN-RUPP COMPANY ● MANSFIELD, OHIO
GORMAN-RUPP OF CANADA LIMITED ● ST. THOMAS, ONTARIO, CANADA