INSTALLATION, OPERATION AND MAINTENANCE MANUAL

GORMAN-RUPP

GL-01939-OMO1

DEC. 16, 1981

SPECIAL

MODEL S2B12

EQUIPPED WITH 47631-105 CONTROL BOX ASSEMBLY

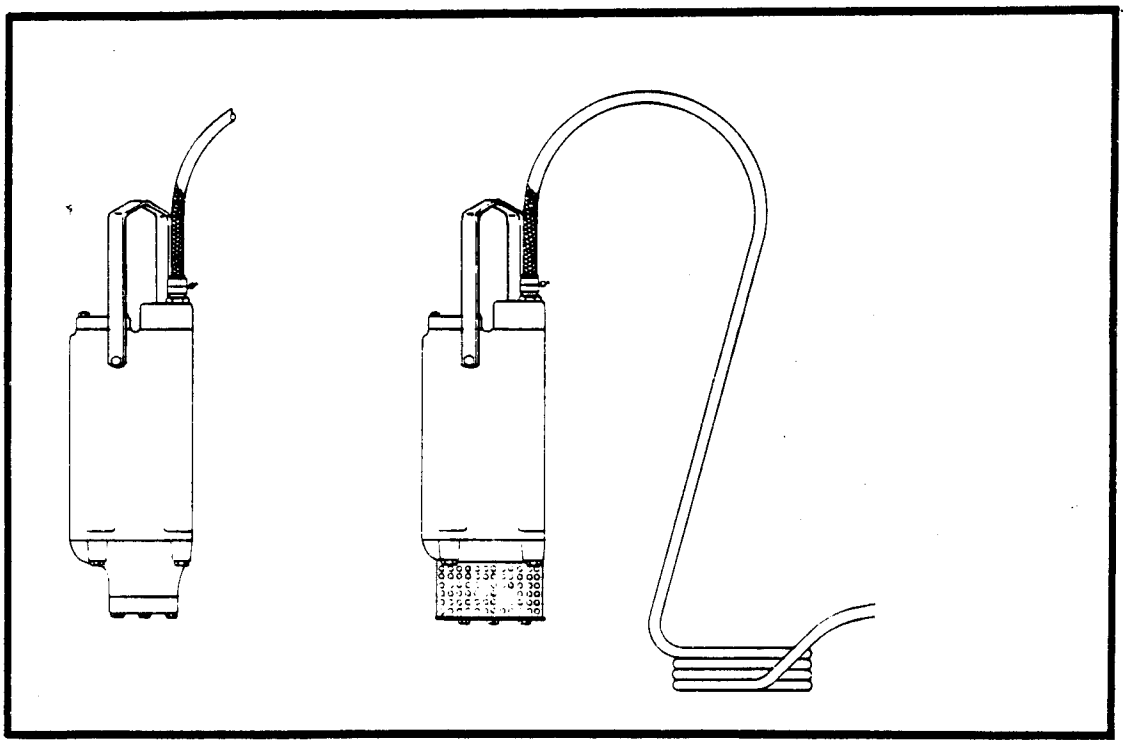

S2B12 460V 3P

THE GORMAN-RUPP COMPANY

305 BOWMAN STREET • P.O. BOX 1217 • MANSFIELD, OHIO 44902 • PHONE 419-524-4211

Printed in U.S.A.

The following methods have been employed in this manual to alert maintenance personnel to procedures which require special attention, to those which could damage equipment, and to those which could be dangerous to personnel.

NOTE

Instructions to aid in installation, operation, or *maintenance or which clarify a procedure.*

CAUTION

Instructions which must be followed to avoid causing damage to the product or other equipment incidental to the installation. These describe the procedure required and the damage which could result from failure to follow the procedure.

WARNING

Instructions which must be followed to avoid causing injury or death to personnel. These describe the procedure required and the injury which could result from failure to follow the procedure.

WARNING

The electrical power needed to operate this pump is of sufficient voltage to cause injury or death in case of bodily contact with it. Disconnect and lock out power before making repairs that could result in physical contact with electrical circuits.

Make sure that electrical power is disconnected from the pump and locked out before attempting to remove debris jammed in the impeller and volute casing. Tag electrical circuits to prevent accidental startup.

Attach adequate grounding wire to ground terminal on inside or outside of control case before applying line potential. Failure to ground control case may cause injury or death by electrocution.

These pumps are designed to pump only non-flammable liquids. Do not attempt to pump flammable or corrosive liquids, or liquids which may attack the power cable insulation.

Approach cautiously any pump that has been running. Liquid flow through the pump is designed to prevent motor overheating, but even at normal operating temperatures the pump can become hot enough to cause painful burns. The pump temperature will be especially high if it is operating against a closed or partially closed discharge valve.

All electrical connections must be in accordance with the National Electric Code and all local codes. If there is a conflict between the instructions in this manual and specifications in the National Electric Code or the applicable local code, the national or local code shall take precedence. All electrical equipment supplied with this pump was in conformance with applicable federal regulations and national codes in effect at the date of manufacture. Failure to follow applicable codes, or substitution of electrical parts not supplied or approved by the manufacturer, can result in severe injury or death by electrocution.

CAUTION

To retain "permissibility" of this equipment, the following conditions shall be satisfied:

1. General Safety. Frequent inspection shall be made. All electrical parts, including the portable cable and wiring, shall be kept in a safe condition. There shall be no openings into the casings of the electrical parts. A permissible distribution box shall be used for connection to the power circuit unless connection is made in fresh intake air. The machine frame shall be effectively grounded. The power wires shall not be used for grounding. The operating voltage must match the voltage rating of the motor(s) ±10%.

2. Servicing. Explosion-proof enclosures shall be restored to the state of original safety with respect to all flame arresting paths, lead entrances, etc., following disassembly for repair or rebuilding, whether by the owner or an independent shop.

3. Fastenings. All bolts, nuts, screws, and other means of fastening, and also threaded covers, shall be in place, properly tightened and secured.

4. Renewals and Repairs. Inspections, repairs, or renewals of electrical parts shall not be made unless the portable cable is disconnected from the circuit furnishing power, and the cable shall not be connected again until all parts are properly reassembled. Special care shall be taken in making renewals or repairs. Leave no parts off. Use replacement parts exactly like those furnished by the manufacturer. When any lead entrance is disturbed the original leads or exact duplicates thereof shall be used and stuffing boxes shall be repacked in the approved manner.

5. Cable Requirements. Special care shall be taken in handling the cable to guard against mechanical injury and wear. Splices in portable cables shall be made in a workmanlike manner, mechanically strong, and well insulated. One temporary splice may be made in any trailing cable. Such trailing cable may only be used for the next 24-hour period. No temporary splice shall be made in a trailing cable within 25 feet of the machine, except cable reel equipment. Connections and wiring to the outby end of the cable shall be in accordance with recognized standards of safety.

TABLE OF CONTENTS

INSTALLATION, OPERATION, AND MAINTENANCE MANUAL FOR MODEL S2B12 SUBMERSIBLE PUMP

INTRODUCTION AND DESCRIPTION

INTRODUCTION

This manual contains installation, operation, and maintenance instructions for Model S2B12 Submersible Pump. In order to supply the most accurate information, this manual contains a basic text and an appendix. The basic text contains instructions, specifications, and other information applicable to all pumps covered. The appendix contains specific, detailed information applicable to your pump only, including the wiring diagram and pump parts drawing which was in effect at the time your pump was manufactured.

DESCRIPTION

Submersible Pump, Model S2B12, is designed to be submerged in, and to pump, non-flammable liquids encountered in mining operations. A typical pump is shown in figure 1. Pump models covered and their electrical characteristics are listed in Table 1.

The vertical-shaft pump is driven by an integral electric motor. The impeller is keyed to the motor rotor shaft, and is secured with a nut and washer. This arrangement enables the pump to use the motor bearings so that no additional bearings are required. A strainer screen at the bottom of the pump prevents solid matter from entering the pump to clog the impeller. When required, this strainer screen can be replaced with an optional staging adapter, so that the pump can receive at its suction port the output from the discharge of another pump when a high discharge head is encountered.

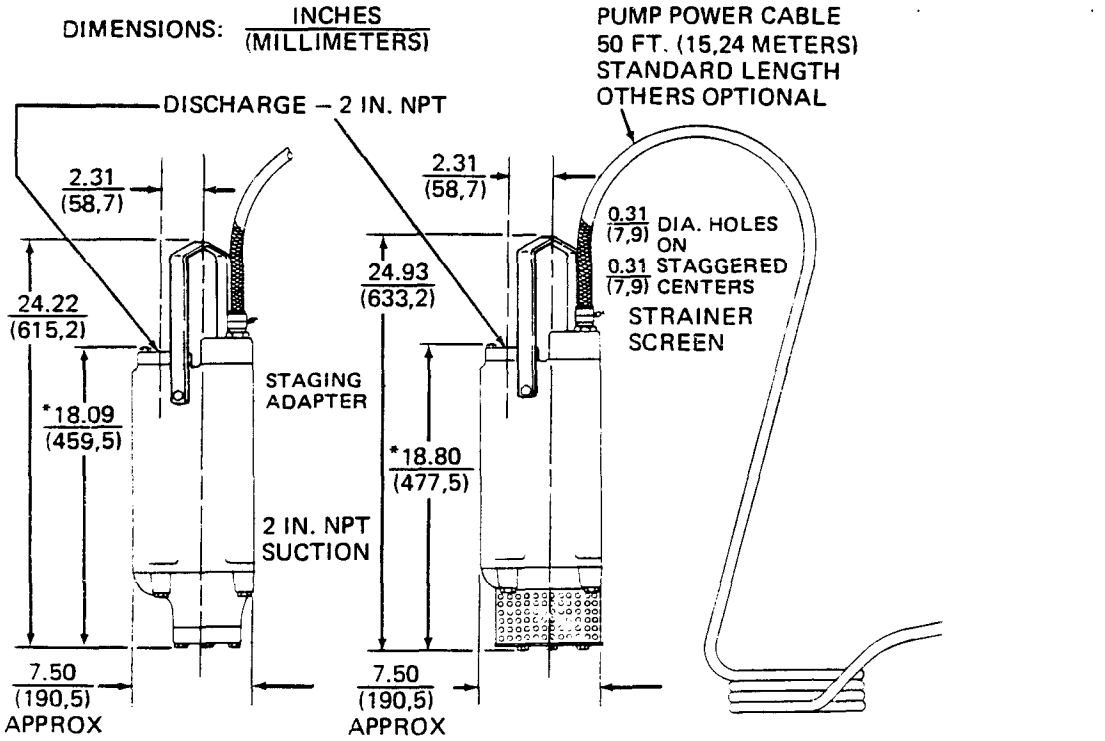

Figure 1. Submersible Pump, Model S2B12, Shown With and Without Staging Adapter

Table 1. Pump Specifications

Model Number	Voltage/ Phase	Horsepower	Revolu-tions/ Minute	Maximum Load Amperes	Shut Off Head Amperes	No Load Amperes	Locked Rotor Amperes	Winding Resistance Ohms	Discharge Size (NPT)
S2B12	460/3	2	3450	4	2.6	2.4	25	8.44	2
S2B12	575/3	2	3450	3.2	2.1	1.9	20	13.20	2

A suction casing surrounding the impeller directs the discharged liquid around the motor through a passage in the motor housing to the discharge flange on the top of the pump. The liquid absorbs heat from the motor housing as it passes through it, and thus cools the motor. The pump discharge port is provided with a threaded flange for 2-inch NPT connection.

The pump incorporates a seal oil cavity and two shaft seals. The inner shaft seal, which seals the motor housing, rides in oil contained in this cavity. This oil also lubricates the outer shaft seal, which prevents the entry of water into the seal cavity.

The pump power cable entry is sealed by a rubber bushing and gland. The motor leads are sealed by an additional compressed rubber bushing. The power cable is connected to the motor leads inside a cavity in the top of the pump. A separable terminal housing permits access to the ends of the motor leads.

A control box is provided to facilitate operation of the pump. It controls the starting and stopping of the pump, and provides protection for the pump motor. Control box specifications are listed in Table 2.

Table 2. Control Box Specifications

Motor Voltage/ Phase	Control Box Part No.	Will Hold Amperes	Will Trip Amperes	Generator Size Kilowatts
460/3	47631-040	4	4.5	6
575/3	47631-041	3.3	3.6	6

INSTALLATION

HANDLING THE PUMP

CAUTION

Do not attempt to raise or lower the pump by pulling or lifting it by the power cable. Lifting the pump by the power cable will damage the cable or break the watertight seal.

The pump is provided with a steel handle on the top. Hook a cable sling, chain, or rope into the handle when raising, lowering, or handling the pump.

PREINSTALLATION INSPECTION

The pump assembly was inspected and tested before it was shipped from the factory. Before installation, inspect the pump for damage which may have occurred during shipment. Check as follows:

a. Check the pump shipping containers for the following contents:

(1) Pump and motor assembly connected to the control box with 50 feet of power cable.

(2) One can of oil for the seal oil cavity.

NOTE

If the pump was shipped with any accessories or optional equipment, information covering the installation, operation, and maintenance of these parts is contained in the appendix.

b. Look for cracks, dents, damaged threads, and a damaged or cracked power cable.

c. Check for loose bolts, nuts, and other attaching hardware. Gaskets tend to shrink after drying; be sure to retighten attaching parts between mating surfaces.

d. Carefully read all tags, decals, and markings on the pump and motor, and perform all duties indicated.

e. Refer to the LUBRICATION section (page 14) and check the oil level in the seal oil cavity.

f. Check that the motor horsepower, phase, and voltage agree with the control box horsepower, phase, and voltage rating.

ELECTRICAL CONNECTIONS

WARNING

All electrical connections must be in accordance with the National Electric Code and all local codes. If there is a conflict between the instructions in this manual and specifications in the National Electric Code or the applicable local code, the national or local code shall take precedence. All electrical equipment supplied with this pump was in conformance with applicable federal regulations and national codes in effect at the date of manufacture. Failure to follow applicable codes, or substitution of electrical parts not supplied or approved by the manufacturer, can result in severe injury or death by electrocution.

a. Check that the line voltage, phase, and frequency available at the installation side correspond to those of the motor and control box.

WARNING

The electrical power required to operate this pump is high enough to cause injury or death in case of accidental contact. Make sure that supply lines are dead and locked out before making any electrical connections to the control box.

CAUTION

Do not run the pump if voltage is not within limits. Continued operation at incorrect voltage can cause severe motor damage.

b. When installing cables to the pump operating site, make sure the wire size is adequate for the pump voltage and length of run. The voltage available at the motor (measured at the control box if mounted within 50 feet of the pump) must not fall below the minimum voltage listed in Table 4.

Table 4. Cable Requirements for Pump Electrical Connections

Model	Voltage/ Phase	Cable Size	Cable OD (inches)	Conductor Dia. (inches)	Amp Rating at 30°C (amperes)	DC Resistance at 25°C (ohms/1000 ft)	Voltage Drop at Max Load Per 100 ft
S2B12	460/3	12	0.89	0.095	30	1.74	1.39
S2B12	575/3	12	0.89	0.095	30	1.74	1.11

c. The pump control box was connected to the pump power cable at the factory. Mount the control box securely.

> **CAUTION**
>
> Failure to mount the control box vertically may cause inaccurate control operation, and nullify resulting warranty claims. The control box has a NEMA 3R rating, but it is not watertight; it must not be submerged at any time.

d. Electrically ground the installation before connecting the power source to the control box. Use the grounding terminals on the inside of the control box.

Suggested grounds are as follows (see figure 2):

(1) An iron or steel plate, 1/4 inch thick, completely imbedded in the ground. The plate must present a surface area of at least 2 square feet.

(2) A rod or pipe, 3/4 inch diameter minimum, 8 feet long, driven into the ground. Iron or steel pipe must be galvanized or otherwise metal plated to resist corrosion. Do not use a painted pipe or any other pipe coated with material of poor conductivity.

(3) Under no circumstances should a ground rod be imbedded less than 4 feet. If rock or stone prevents imbedding more than 4 feet, bury the grounding rod in a horizontal trench.

(4) Space ground rods and plates at least 6 feet from other electrodes and other ground rods, such as those used for signal circuits, radio grounds, lightning rods, etc.

e. Connect the power source leads as shown in the wiring diagram in the appendix.

f. While the pump is running under load, the voltage between terminals 1 and 2, 2 and 3, and 1 and 3 must be within the maximum and minimum limits listed in Table 5 to ensure long life and reliable operation of your pump.

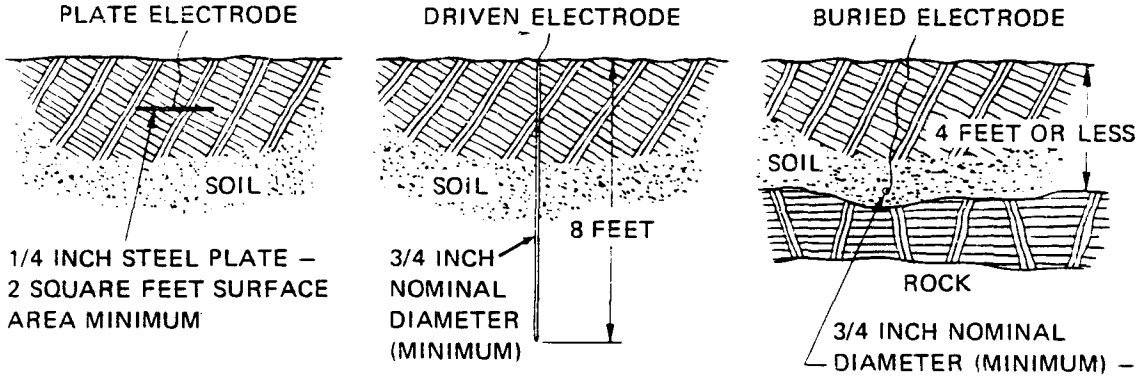

NOTE: ILLUSTRATED GROUNDING METHODS ARE BASED ON RECOMMENDATIONS OF NEC ARTICLE 250. FOLLOW ALL REQUIREMENTS OF NEC AND ALL APPLICABLE LOCAL CODES.

Figure 2. Suggested Grounding Methods

Table 5. Pump Motor Voltage Limits

Nominal Voltage	Phase	Minimum Voltage	Maximum Voltage
460	3	420	500
575	3	520	630

CAUTION

Do not continue to run pump if voltage is not within limits. Continued operation at incorrect voltage can cause severe motor damage.

CHECKING PUMP ROTATION

Check the direction of pump rotation before operation to ensure that the impeller is rotating in the correct direction.

a. Suspend the pump from the handle. Move the control handle to the ON position and push the START pushbutton. Note the direction of twist. If the pump twists counterclockwise, rotation is correct. Refer to figure 3. If the pump twists clockwise, it is operating in the wrong direction. Push the STOP RESET pushbutton to stop the pump.

WARNING

Make sure the related electrical circuits are dead and locked out before interchanging electrical leads at the control box. Failure to do so may cause an electrical shock which could result in injury or death.

b. To correct the direction of rotation, move the control handle to the OFF position, and interchange any two of the power leads connected to the controlled side of the control box. Refer to the wiring diagram in the appendix. Recheck the direction of rotation as described above.

c. If the pump fails to start, refer to the TROUBLESHOOTING section of this manual to determine the cause of faulty operation.

CAUTION

After overload relays trip, wait at least 10 minutes before attempting to reset. Repeated starting attempts under overload conditions can burn out motor.

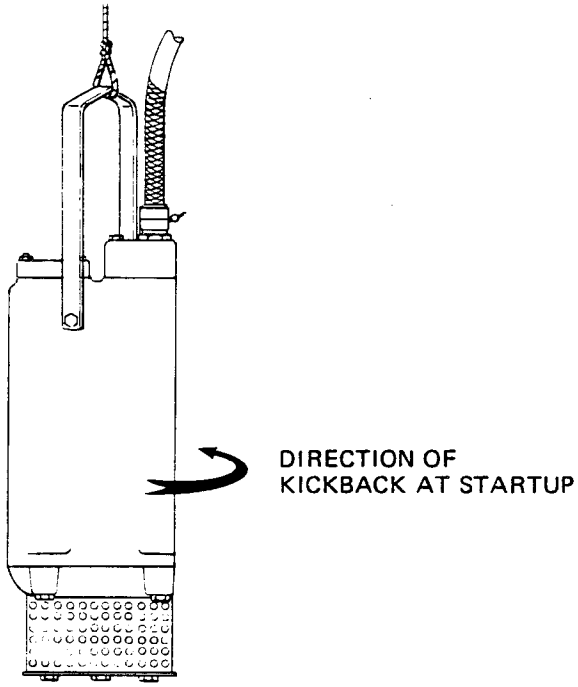

Figure 3. Checking Pump Rotation

SETTING THE PUMP

a. To install pump, use one of the methods shown in figure 4. The pump will operate if lying on its side but this method of operation is not recommended since the pump has a tendency to roll, winding up hose and cable. Suspend the pump from the handle, set it in a perforated barrel or metal culvert pipe, or rest it on timbers where heavy sludge- or debris-covered sump bottoms are encountered. Any solids small enough to pass through the strainer screen will be pumped without difficulty.

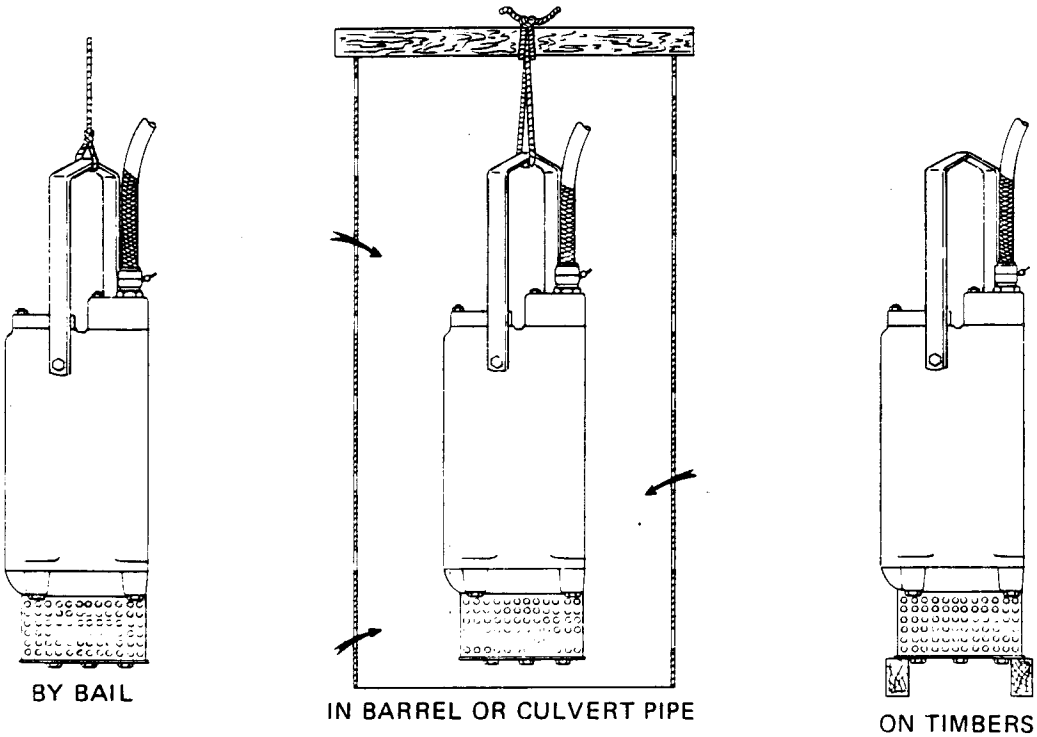

Figure 4. Pump Installation Methods

b. Install the discharge hose or piping and provide adequate support for it. Do not allow the pump to support the weight of hose or piping, since this can result in serious vibration, decreased bearing life, and increased wear on rotating parts. Make sure the support is capable of holding the line when it is full of liquid.

OPERATION

PUMPS WITHOUT LIQUID LEVEL CONTROL

CONTROLS

The control box is provided with a circuit breaker control handle (1, figure 5) which operates the overload unit/circuit breaker. In the OFF position, the control handle opens the circuit breaker to prevent pump operation, or to shut off the pump if it is operating. In the ON position, the control handle closes the circuit breaker to start the pump and keep it running. The circuit breaker trips to break the circuit in case of short circuit. To reset the circuit breaker, move the control handle to OFF and back to ON.

The overload unit/circuit breaker also contains overload protection. If the pump motor current draw exceeds design specifications for an extended period of time, the overloads will open the pump circuits to stop the pump. If the overloads trip, allow them to cool for at least 10 minutes, then reset them by moving the control handle to OFF and back to ON.

OPERATION

After installation, operate the pump as follows:

a. To start the pump, lift the control box cover and move the control handle to the ON position. The pump motor will start running and pumping should start. Since the pump is submerged in water, no pump priming is required.

b. The pump will continue to operate until it is stopped by moving the control handle to the OFF position.

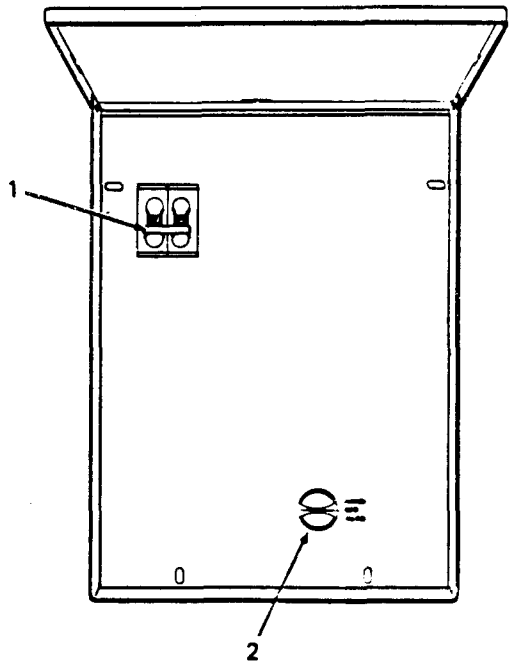

1. Control handle

2. Selector switch

Figure 5. Pump Control Box

PUMPS WITH OPTIONAL LIQUID LEVEL CONTROL

CONTROLS

The control box is provided with a circuit breaker control handle and a selector switch. See figure 5. The function and use of these controls is as follows:

a. The control handle (1, figure 5) operates the control box overload unit/circuit breaker. In the OFF position, the control handle opens the circuit breaker to prevent pump operation. In the ON position, it closes the circuit breaker to permit pump operation. The circuit breaker trips to break the circuit in case of short circuit or overload. To reset the circuit breaker, move the control handle to OFF and back to ON.

b. The overload unit/circuit breaker also contains overload protection. If the pump motor current draw exceeds design specifications for an extended period of time, the overloads will open the pump circuits to stop the pump. If the overloads trip, allow them to cool for at least 10 minutes, then reset them by moving the control handle to OFF and back to ON.

c. The selector switch (2) controls the mode of pump operation. In the OFF position, it prevents all pump operation or shuts off the pump if it is running. When the switch is in the HAND position, it allows the pump to run continuously. In the AUTO position, it allows the pump to be controlled automatically by the level control system.

MANUAL OPERATION

After installation, operate the pump manually as follows:

a. Move the control handle to the ON position, and turn the selector switch to HAND. The pump motor will start running and pumping should start. Since the pump is submerged in water, no pump priming is required.

b. The pump will continue to operate until it is stopped by turning the selector switch to OFF.

AUTOMATIC OPERATION

To operate the pump automatically under control of the optional liquid level control system, proceed as follows:

a. Refer to the appendix and install and set up the liquid level control system.

b. Move the control handle to the ON position, and turn the selector switch to AUTO. The pump should start and stop as required by the liquid level.

c. To stop or prevent pump operation, turn the selector switch to OFF.

ALL PUMPS

STOPPING

To stop the pump, turn the selector switch to OFF or move the control handle to the OFF position. Note the following:

a. If the pump is not equipped with a check valve in the discharge line, make sure the discharge line is not submerged at the point of discharge or siphoning may occur.

b. If freezing temperatures are expected before the next operating period, protect the pump as follows:

1. The pump will not freeze as long as it is entirely submerged in water. If it will be only partially submerged, or if it is expected that the sump will freeze solid, lift the pump from the water, set it on blocks or timbers near the sump, and allow it to drain. Start the pump and run it for two or three minutes so that the impeller can create an air flow to dry the inside pump walls. Do not run the pump for more than 10 minutes.

2. Drain the discharge lines if they are above the water and will be subjected to freezing temperatures.

OPERATING PRECAUTIONS

The following notes are included here to call your attention to specific characteristics of pump operation which can cause injury to personnel or damage to the equipment. Note the following:

a. If the pump motor stops because of actuation of the overload relays, wait at least 10 minutes before attempting to reset them. Repeated starting attempts under overload conditions can burn out the motor.

b. Approach cautiously any pump that has been running. Liquid flow through the pump is designed to prevent motor overheating, but even at normal operating temperature the pump can become hot enough to cause painful burns. Pump temperature will be especially high if it is operating against a closed or partially closed discharge valve.

c. These pumps are designed to pump only non-flammable liquids. Do not attempt to pump flammable or corrosive liquids, or liquids which may attack the power cable insulation.

d. The pump is designed to be run with a control box to provide overload protection and power control. Do not connect the pump motor directly to the incoming power lines.

OPERATING CHECKS

Check the pump for proper operation when it is first started and periodically thereafter to identify minor problems before they become major repair jobs.

a. Check the pump for unusual noises or excessive vibration while it is operating. If noise or vibration is excessive, stop the pump and refer to the troubleshooting chart for possible causes.

b. Check the pump strainer screen for clogging caused by stones, sticks, rope, cloth, and other debris. Clean the strainer screen when required. In some cases, stopping the pump momentarily may back flush the strainer screen, purging most of the debris from it. If this fails to clean the screen, remove the pump from the sump and remove the debris manually. See PUMP DISASSEMBLY (page 19).

c. Check the pump for overheating. The pump could overheat if there is a closed valve in the discharge line because the pump motors are cooled by the water flow through them. Closing off the discharge line for an extended period with the motor operating can cause the water and the pump to overheat.

THAWING A FROZEN PUMP

If the pump is frozen, submerge it in water to thaw it. Allow it to stand several minutes and attempt to start it. If it is still frozen, allow it to remain submerged at least 10 minutes more before again attempting to start it. Repeat the procedure until the pump is free.

CAUTION

Do not attempt to thaw the pump with a torch. This may heat the seal cavity oil above the critical temperature and damage the pump.

TROUBLESHOOTING

TROUBLESHOOTING CHART

The chart below describes various types of troubles which might be encountered during pump operation, and gives possible causes and probable remedies for the troubles. Causes are listed in the sequence in which they should be checked.

WARNING

The electrical power required to operate this pump is high enough to cause injury or death in case of accidental contact. Shut off electric power whenever possible before checking for causes of faulty pump operation.

Do not remove the control box cover in an explosive atmosphere. When sealed, the control box is explosion proof to prevent the ignition of combustible gases. Opening the box in an explosive atmosphere could cause fire or explosion.

Table 6. Troubleshooting Chart

Trouble	Cause	Remedy
PUMP FAILS TO START (Overload relays do not trip)	No voltage at L1, L2, and L3 in control box. (See wiring diagram in appendix.)	Check power source for blown fuse, open disconnect, broken wire, or loose connection.
	Open circuit in motor windings or pump power cable.	Disconnect pump and check continuity with ohmmeter (see page 13).

Table 6. Troubleshooting Chart (Cont)

Trouble	Cause	Remedy
PUMP FAILS TO START (Overload relays trip within 10 seconds)	CAUTION After overload relays trip, wait at least 10 minutes before attempting to reset. Repeated starting attempts under overload conditions can burn out the motor.	
	Low or incorrect voltage.	Voltage at control box must be within limits of Table 5 (see page 6).
	Incorrect control box.	Check control box part number against Table 2 (see page 2). Install correct control box.
	Defective insulation in motor windings or pump power cable, causing short circuit.	Check insulation resistance (see page 14).
	Impeller jammed.	Remove strainer screen and remove debris (see page 15).
	Insufficient impeller clearance.	Remove strainer screen and check impeller clearance (see page 18).
	Motor windings defective.	Check motor winding insulation resistance and continuity (see page 13).
PUMP RUNS, BUT PUMPS AT REDUCED CAPACITY	Discharge head too high.	Reduce discharge head, or use optional staging adapter and additional pump. Check pump rating against pumping requirements.
	Closed valve in discharge line.	Open valve.
	Discharge lines clogged or restricted or hose kinked.	Clear clogging or repair lines; straighten kinked hose.
	Strainer screen or impeller clogged.	Stop pump momentarily; back flow may flush debris from pump. If necessary, remove strainer screen and remove debris.
	Pump running backwards.	Check direction of pump rotation and correct if necessary (see page 6).
	Low or incorrect voltage.	Voltage at control box must be within limits of Table 5 (see page 6).

Table 6. Troubleshooting Chart (Cont)

Trouble	Cause	Remedy
PUMP RUNS, BUT PUMPS AT REDUCED CAPACITY (Cont)	Worn impeller or excessive impeller clearance.	Disassemble pump; inspect and check impeller clearance. If wear rate is excessive, raise pump from sump bottom to reduce amount of abrasive particles.
PUMP STARTS, THEN STOPS WHEN OVER-LOAD RELAYS TRIP	CAUTION After overload relays trip, wait at least 10 minutes before attempting to reset. Repeated starting attempts under overload conditions can burn out motor.	
	Low or incorrect voltage.	Voltage at control box must be within limits of Table 5 (see page 6).
	Power phases not balanced.	Check voltage and amperage balance between phases (see page 13).
	Impeller clogged.	If necessary, remove strainer screen and remove debris.
PUMP STARTS, THEN STOPS WHEN OVER-LOAD RELAYS TRIP	Impeller rubbing.	Remove strainer screen and check impeller clearance (see figure 6, page 16).
	Incorrect connections at terminal housing.	Remove terminal housing (see page 20) and check connections against wiring diagram in the appendix and the motor nameplate.
PUMP HUMS BUT DOES NOT RUN (Overload relays trip out)	CAUTION After overload relays trip, wait at least 10 minutes before attempting to reset. Repeated starting attempts under overload conditions can burn out motor.	
	Pump frozen.	Thaw pump (see page 10).
	Impeller jammed.	Remove strainer screen and remove debris, or check impeller clearance (see figure 6, page 16).

TROUBLESHOOTING CHECKS

If you suspect that the pump malfunctions are caused by defects in the motor, pump power cable, or control box, make the following checks to help isolate the defective parts.

Phase Balance

The voltage and current draw (amperage) for each phase of a three-phase motor should be balanced. Any imbalance between phases that is detectable by a commercially available voltmeter or ammeter indicates a defect in the motor, control box, or power supply that must be corrected to ensure proper pump operation. Check as follows:

a. Use a voltmeter, Amprobe, or equivalent meter to read the voltage across terminals 1 and 2, 2 and 3, and 1 and 3 in the control box. All three measured voltages must be the same, as accurately as the meter will read. If possible, measure the voltage with the pump off, with the pump running but out of the water, and with the pump running in the water at full load. All the measured voltages at each condition must be the same.

b. Use an Amprobe or equivalent meter to measure the current draw of each phase while the pump is running at full load and at no load. All three amperage readings must be the same at each condition, as accurately as the meter will read. Nominal amperage values are listed in Table 1, but these apply only when the actual voltage at the site is the nominal voltage listed.

c. If the voltages are balanced with the pump off, but are unbalanced when the pump is running, a thorough check of the power source, all interconnecting cables, and the pump motor is required to isolate the defect.

Continuity Check

If there is a defective connection between the pump power cable and the motor, or if there is a broken wire in the power cable, the motor will not start, or it will start then shut off when the circuit breaker or overload relays trip. Check the continuity as follows:

a. Use a self-powered continuity tester, or use an ohmmeter set to read resistance X 1. Zero balance the ohmmeter before proceeding.

WARNING

The electrical power required to operate this pump is high enough to cause injury or death in case of accidental contact. Shut off the power and lock it out before checking the circuits.

b. Connect one test lead to the white lead in the pump power cable. Connect the other test lead to the red lead or black lead. A high resistance reading (∞) or failure of the continuity tester to light indicates an open or broken circuit caused by a break in the motor winding or power cable, or by a bad connection at the motor terminals.

c. Repeat step b with each pair of pump power cable leads (white to red, white to black, and red to black). If the resistance measurement between any pair of leads indicates a broken circuit, remove the pump from the sump and inspect the power cable for damage. If necessary, remove the terminal housing (see CABLE AND TERMINAL REPAIR, page 19) and inspect the connections. Tighten the connections and retest.

d. If the connections were tight, disconnect the pump power cable from the pump inside the terminal housing. Check each power cable wire for breaks from the control box end to the motor end. Replace

the power cable if necessary; splicing the cable or otherwise repairing it between the pump and the control box is not recommended.

e. If the pump power cable is good, repeat step b for each pair of motor leads inside the terminal housing. An open or broken circuit between any two of the motor leads (white to red, white to black, or red to black) indicates an open circuit in the motor. Disassemble the motor (see page 24) and inspect further.

Insulation Resistance Check

Use the following check to determine if the motor windings are shorted to ground, and to evaluate the condition of the motor winding insulation.

WARNING

The electrical power required to operate this pump is high enough to cause injury or death in case of accidental contact. Shut off the power and lock it out before checking the circuits.

a. Disconnect the pump power cable from the control box for this test. Use an ohmmeter set to read resistance X 100K. Zero balance the meter before proceeding.

b. Connect one ohmmeter lead to the green ground lead. Touch the other ohmmeter lead in turn to the white lead, red lead, and black lead, and note the resistance reading. If any reading is zero, either the pump power cable or the motor is grounded. Remove the terminal housing (see CABLE AND TERMINAL REPAIR, page 19) and disconnect the power cable from the motor. Test the cable and the motor separately to determine which is at fault.

c. If the resistance reading is infinity (∞), both the pump power cable and the motor winding insulation are in good condition. If the reading is between infinity (∞) and 1 megohm (reading of 10 with meter set at R X 100K), the motor insulation is acceptable, but it should be rechecked periodically to determine if the insulation resistance is dropping. If the resistance is less than 1 megohm, or if the reading drops when rechecked, disassemble the pump and inspect the motor more closely.

LUBRICATION

SEAL OIL CAVITY

After the first two weeks of operation, and every month thereafter, check the oil condition and its level in the seal cavity. Note the following:

WARNING

Check oil level only when the pump is cool. If you remove the level plug when the pump is warm or hot, pressure in the seal cavity can cause the hot oil to spray out when the plug is removed.

a. Lay the pump on its side with the level plug up. Screw a short 1/4-inch NPT nipple into the hole and plug the open end with your finger. Tip the pump upright, drain off a small amount of oil into a transparent cup, and lay the pump on its side again. If the oil is cloudy or has water in it, drain the oil as described below. If the oil is clear, remove the nipple, top up the seal cavity with SAE 5W to SAE 20W non-detergent oil, and reinstall the level plug.

b. If the seal cavity oil is cloudy or has water in it, drain out and discard the oil and inspect the outer shaft seal. Refer to PUMP DISASSEMBLY (below). After inspection or replacement of the seal, refill the seal cavity with SAE 5 to SAE 20 non-detergent oil. Seal cavity capacity is 1/2 pint (0.24 liter).

MOTOR BEARINGS

Both motor bearings are sealed ball bearings. Periodic relubrication is not required.

PUMP REPAIR

GENERAL

Removal of the strainer screen is necessary to remove jammed debris from the impeller, and to check impeller clearance. The outer shaft seal can be replaced without extensive disassembly. Refer to figure 6 for a cross sectional view of the pump. Refer to the parts drawing in the appendix for part numbers.

PUMP DISASSEMBLY

WARNING

Disconnect power, or shut it off and lock or tag it, to prevent accidental starting during repair. Severe injury may occur if the pump starts when fingers or tools are caught in the impeller.

a. Turn off the power and disconnect the trailing cable from the control box. Drain the seal cavity as described in the LUBRICATION section (page 14).

b. Remove cap screws (8, figure 6) that secure strainer screen (9) to the pump. Remove the strainer screen. If the impeller is clogged, the debris can probably be removed without further disassembly.

c. Remove nuts (3) and lockwashers (2) that secure suction casing (10) to the motor housing (16). Pull off the suction casing and remove and discard gasket (14).

d. Wedge a piece of wood between one of the blades of impeller (11) and a stud (4) to prevent shaft rotation. Unscrew locknut (6) and remove flat washer (7). Pry off the impeller using two screwdrivers as shown in figure 7, and remove key (5).

e. Carefully remove the loose parts of outer shaft seal (12). Tie together and tag the shims, or measure and record their thickness to facilitate reassembly. The mating surfaces of the rotating and

stationary seals are highly polished. The seal should be replaced only if it is leaking or is damaged during disassembly. If the seal is to be reused, wrap the seal faces individually in tissue paper to prevent damage to the sealing surfaces.

f. Pull off the seal plate (13) and remove O-ring (15). If the seal is being replaced, push out the shaft seal stationary seal seat from the bore in the seal plate.

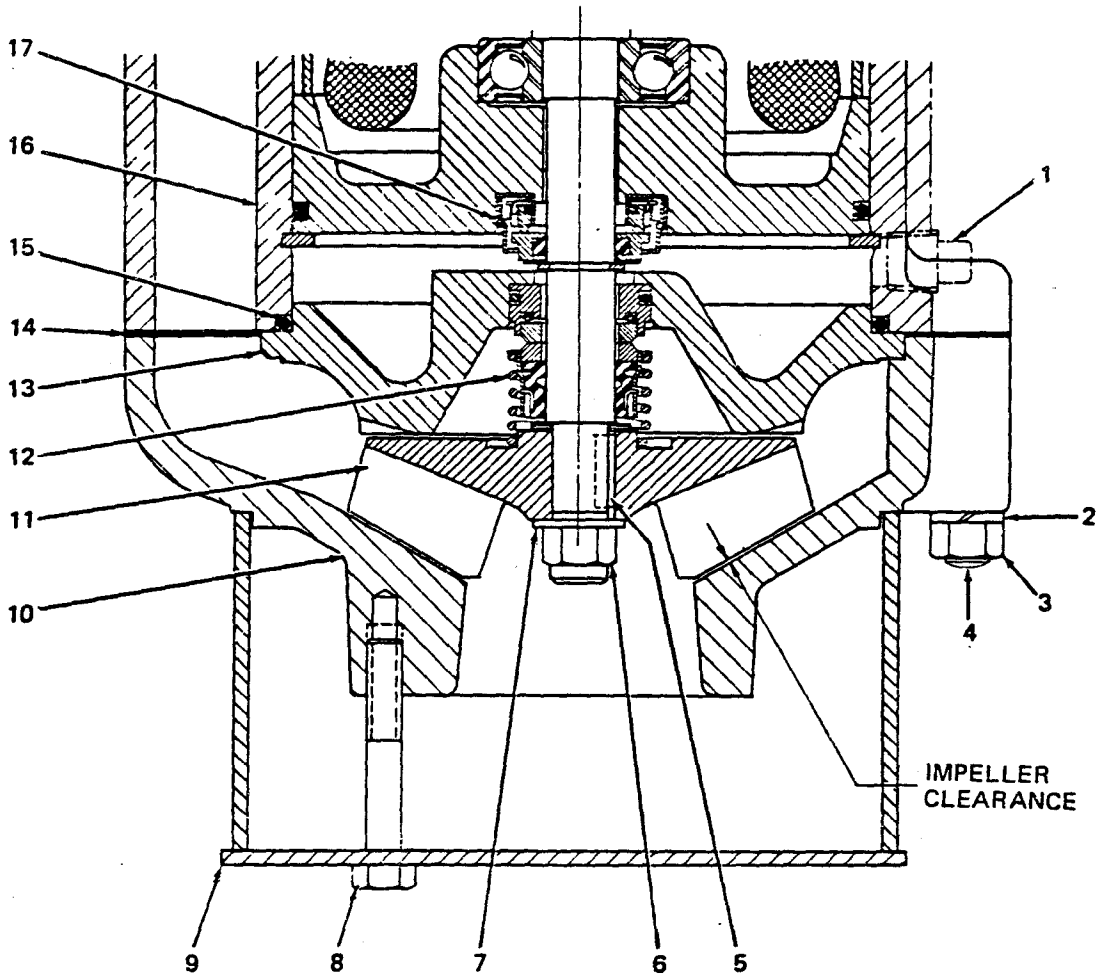

1. Pipe plug
2. Lockwasher
3. Nut
4. Stud
5. Key
6. Locknut
7. Flat washer
8. Cap screw
9. Strainer screen
10. Suction casing
11. Impeller
12. Outer shaft seal
13. Seal plate
14. Gasket
15. O-ring
16. Motor housing
17. Inner shaft seal

Figure 6. Typical Pump Cross Section

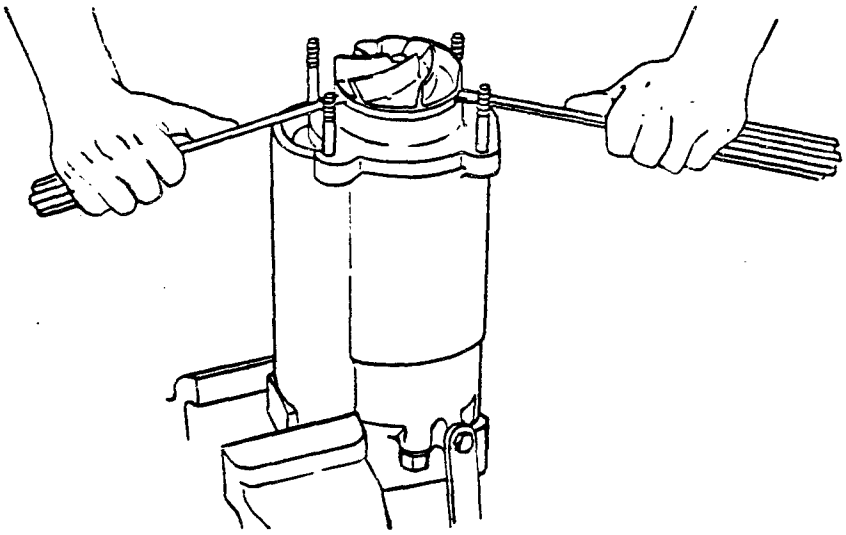

Figure 7. Removing Pump Impeller

CLEANING AND INSPECTION OF PUMP PARTS

WARNING

Use cleaning solvents only in a well-ventilated area free from excessive heat, sparks, and flame. Most cleaning solvents are toxic and flammable. Read and observe all precautions printed on solvent containers.

a. Clean the disassembled pump parts in commercial cleaning solvent, diesel fuel oil, or kerosene to remove all grease, oil, and dirt. If the motor has not been disassembled, wipe the lower end of the motor housing and the intermediate with a cloth soaked in solvent to remove all grease and dirt. Wipe clean the seal cavity with a clean cloth lightly dampened with solvent. Do not allow the solvent to seep into the inner shaft seal. Scrape off old gaskets and sealing compound.

NOTE

The reuse of old O-rings, gaskets, and shaft seal parts may result in premature leaking and loss of pump efficiency. Use of the overhaul gasket kit is recommended.

b. Discard and replace all O-rings and gaskets. If the shaft seal faces are scratched, scored, nicked, or visibly worn, replace the shaft seal as an assembly. Shaft seal parts are not replaceable individually, and seal faces are not normally repairable without special equipment to restore the high polish to the sealing surfaces. Refer to the parts drawing in the appendix for part numbers.

c. Inspect the impeller for cracks, chipped or broken vanes, distortion, wear, and erosion. Replace the impeller if it is damaged, or if erosion is detectable by visual inspection.

d. Inspect the suction casing and seal plate for cracks, distortion, and erosion. Replace defective parts

e. Inspect the strainer screen for cracks, broken welds, and distortion. Straighten or reweld the strainer screen if required.

f. Inspect the studs in the motor housing for stripped threads and other damage. Replace them if they are damaged, and retighten before reassembly.

g. Inspect all other parts for cracks, distortion, damaged threads, wear, and other damage. Replace defective parts.

h. Inspect the end of the motor rotor shaft for damaged threads, scoring, and a nicked or damaged keyway. Remove nicks and burrs with a fine file or hand honing stone to restore original contours. If the shaft is bent or damaged, replace the rotor and bearings as an assembly. See MOTOR DISASSEMBLY (page 24).

PUMP REASSEMBLY

NOTE

Refer to the parts drawing in the appendix for all torque values, assembly clearances, recommended assembly lubricants, and other details of assembly instructions. Only general procedures are described below.

a. If the studs in the motor housing were removed, install them as described on the parts drawing. If no torque values are provided, tighten the studs just until they are snug.

b. If the motor was disassembled, check that the inner shaft seal was properly installed as described in INNER SHAFT SEAL REPLACEMENT (page 23).

c. Check that O-rings (6 and 8, figure 8) are installed in stationary seal seat (7) and lubricate them with petroleum jelly. Push the stationary seal seat into the bore in seal plate (13, figure 6). Coat O-ring (15) with petroleum jelly and install it in the counterbore in motor housing (16). Install the seal plate on the motor housing.

d. To facilitate checking the impeller clearance, do not install the complete seal at this time. Refer to figure 6 and install on the motor rotor shaft the same thickness of shims removed at disassembly. Install key (5) and impeller (11), and secure with flat washer (7) and locknut (6). Install and tighten the locknut as described on the parts drawing.

e. Install suction casing (10) and a new gasket (14). Secure the suction casing with four nuts (3) and lockwashers (2) tightened evenly and in a cross sequence to the torque value shown on the parts drawing. Measure the impeller clearance with a feeler gauge. The impeller clearance must fall within the limits specified on the parts drawing.

f. Remove the suction casing and impeller. If the measured impeller clearance was not within limits, change the thickness of shims as required.

g. Apply a drop or two of SAE 5 to SAE 20 non-detergent oil to rotating seal face (4, figure 8) and stationary seal face (5). Handle these seal faces by the edges only. Slide stationary seal face (5) over the motor rotor shaft and push it into the stationary seal seat in the seal plate, making sure the notches in the seal engage the lugs in the seat. Install the remaining seal parts as shown in figure 8. Use the thickness of shims determined in step f.

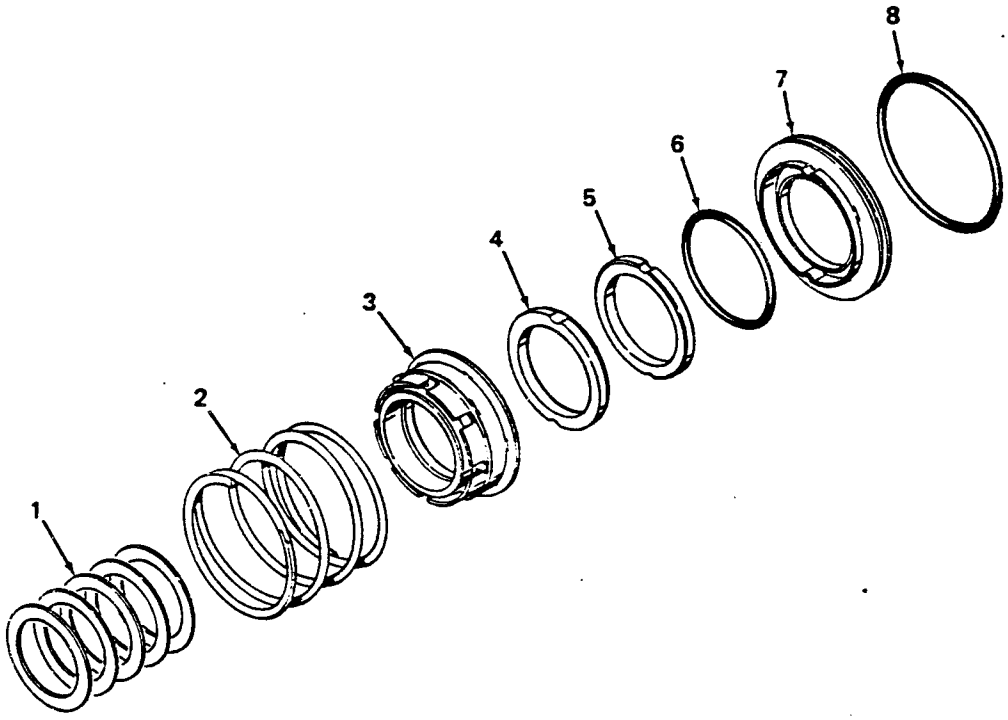

1. Shims
2. Spring
3. Bellows and retainer assembly
4. Rotating seal face
5. Stationary seal face
6. O-ring
7. Stationary seal seat
8. O-ring

Figure 8. Exploded View of Outer Shaft Seal

h. Reinstall the impeller and suction casing, apply thread lubricant as specified, and tighten the attaching parts to the torque values specified on the parts drawing. Recheck the impeller clearance, and check that the impeller turns freely.

i. Install strainer screen (9, figure 6) and secure with four cap screws (8). Tighten the cap screws just enough to draw the strainer screen down tightly, but not tight enough to distort it.

j. Refill the seal cavity with oil as described in the LUBRICATION section (page 14).

CABLE AND TERMINAL REPAIR

GENERAL

The pump power cable leads are connected to the motor stator leads inside a removable terminal housing on the top of the pump. Follow the instructions below before disassembly of the motor, or when required to check or replace the pump power cable or motor stator.

CABLE AND TERMINAL DISASSEMBLY

WARNING

The electrical power required to operate this pump is high enough to cause injury or death in case of accidental contact. Shut off the power and lock it out before removing the terminal housing.

Do not remove the terminal housing in an explosive atmosphere. The terminal housing and its O-ring must remain intact to retain the permissibility of this equipment. Removing the housing in an explosive atmosphere could cause fire or explosion.

a. Remove the nuts (2, figure 9) and lockwashers (1) which secure terminal housing (6) to the motor housing (9). Pull off the terminal housing. Cut or unwrap the tape, then remove connectors (10) to disconnect the pump power cable leads from the motor leads. Remove O-ring (8) from the motor housing. No further disassembly is required to test the stator or power cable.

b. Remove the screws and lockwashers (7) to disconnect the green ground lead and the yellow ground check lead from the terminal housing.

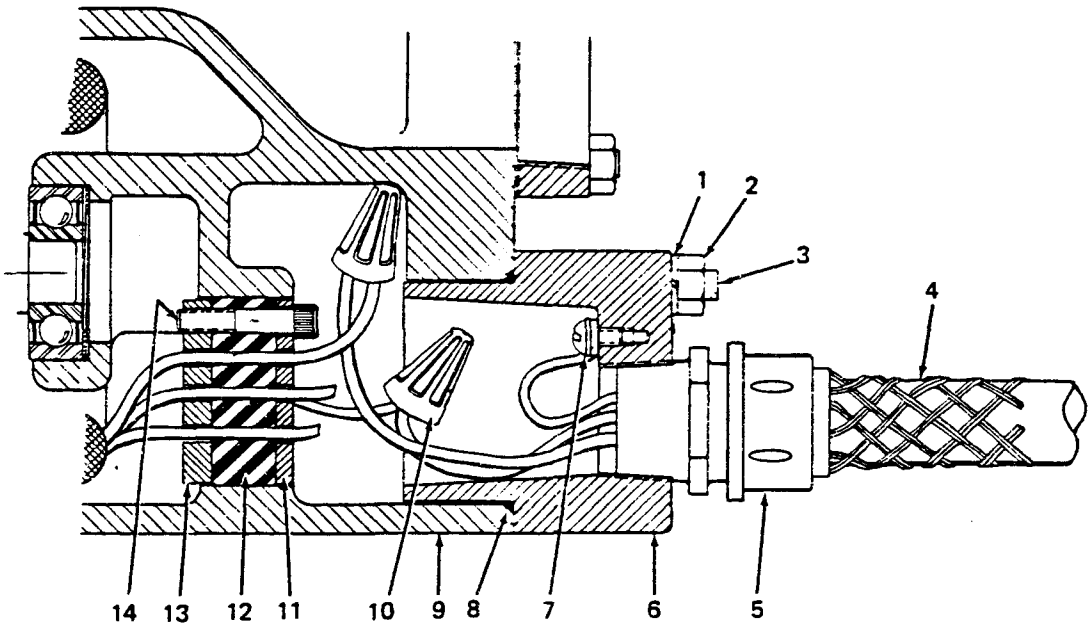

1. Lockwasher
2. Nut
3. Stud
4. Pump power cable
5. Cable grip
6. Terminal housing
7. Screw and lockwasher
8. O-ring
9. Motor housing
10. Connector
11. Upper plate
12. Motor lead bushing
13. Lower plate
14. Cap screw

Figure 9. Cross Sectional View of Motor Connections and Terminal Housing

c. If the pump power cable must be replaced, cut and remove the seal wire which retains cable grip (5) to the terminal housing. Remove the cable grip nut and pull the pump power cable from the cable grip.

d. If the motor is to be disassembled, remove four cap screws (14). Pull out the assembled plates (11 and 13) and motor lead bushing (12) from the bore in the motor housing. Pull the motor leads from the plates and bushing.

CLEANING AND INSPECTION OF CABLE AND TERMINAL PARTS

NOTE

Discard and replace the terminal housing O-ring and all sealing wire each time the terminal housing is removed. Do not attempt to reuse these parts.

a. Clean the outside of the pump power cable with warm water and mild detergent. Clean all other parts by wiping with a clean dry cloth.

b. Inspect the pump power cable for cracked, broken, or damaged insulation, and other damage. Check the cable for continuity (see page 13) and for insulation resistance (see page 14). Replace the cable if it is defective. Do not attempt to repair the cable except to cut off a portion of it at either end. Splicing or otherwise repairing the cable between the pump and the control box is not recommended.

c. Inspect the bushing and cable grip for cracks, swelling, cuts, and deterioration. Replace the bushing or cable grip if either is damaged, since this may prevent a watertight seal.

d. Inspect the terminal housing for cracks, distortion, and other damage. Replace a damaged housing.

e. Inspect the studs in the motor housing for distortion, damaged threads, and other damage. Replace defective studs. Inspect all remaining hardware for cracks, distortion, and damaged threads.

CABLE AND TERMINAL REASSEMBLY

a. Lubricate the motor leads and the bores in motor lead bushing (12, figure 9) with petroleum jelly. Feed the motor leads through lower plate (13) and push them through the motor lead bushing. When the leads are about 1-1/2 to 2 inches above the top of the bushing, install upper plate (11).

b. Start two cap screws (14) through the upper plate and bushing and into the tapped holes in the lower plate. Do not tighten the screws. Lubricate the outside of the bushing and the bore in the upper motor housing with petroleum jelly, and push the assembled plates and bushing into the housing until the plates and bushing are positioned as shown in figure 9.

c. Install the two remaining cap screws (14). Check that there is enough of the motor leads protruding to permit connection to the pump power cable. Tighten the four cap screws evenly and alternately to the torque value shown on the parts drawing.

d. If the ends of the pump power cable leads (except the green ground lead or yellow ground check lead) are frayed or broken, cut them off beyond the damaged area and strip back the insulation about 1/2 inch. Reinstall any wire tags if they remain with the pieces cut off. Install new terminals on the ground lead and ground check lead if the old ones are damaged.

e. Use petroleum jelly to lubricate the outside of pump power cable (4) and the bore in cable grip (5) for ease of assembly. Loosen the cable grip nut and install the cable grip on the pump power cable. Apply sealant to the cable grip threads as specified on the parts drawing.

f. Start the cable grip hex body into the terminal housing (6), and feed the pump power cable leads into the terminal housing. Check that there is sufficient cable lead length to permit wire connection, and tighten the hex body.

g. Connect the green ground lead and the yellow ground check lead to the terminal housing and secure with screws and lockwashers (7). These two wires must be connected to separate points in the terminal housing. Make sure each terminal makes good contact with the housing.

h. Install a new O-ring (8) on the terminal housing. Refer to the wiring diagram in the appendix for correct connection, then connect the correct wires with connectors (10). Wrap each connection with underwater tape (part number 18656-068, available from Gorman-Rupp) to seal it and prevent the connector from working loose. Start the tape between the connectors and double back, then stretch the tape and wrap it around the leads and connector.

i. Install the terminal housing on the motor housing and secure with nuts (2) and lockwashers (1). Tighten the nuts evenly and alternately around the terminal housing and torque them as shown on the parts drawing.

WARNING

Cable grip must be retained to housing as follows to retain permissibility for this equipment. Failure to seal parts as specified may result in explosion.

j. Tighten the cable grip and secure it to the terminal housing as follows (see figure 10):

(1) Tighten the cable grip hex body. Drill a 1/16-inch diameter hole B in the hex body approximately 45 degrees counterclockwise from hole A in the terminal housing. If the cable grip is being reused, the old hole may be reused if it is in the correct location.

(2) Insert the seal wire through hole B and equalize the wire length. Twist the wire ends approximately 10 turns and insert one end of the wire through hole A. Draw tight and twist the wire ends approximately 10 turns.

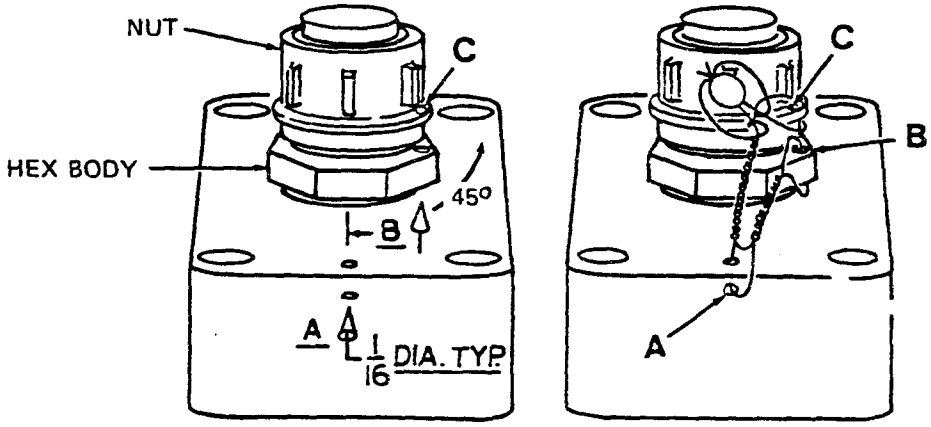

Figure 10. Safety Seal Installation

(3) Tighten the cable grip nut. Drill a 1/16-inch diameter hole C through the flange on the cable grip nut adjacent to hole B in the hex body.

(4) Insert one end of the twisted wire through hole C and draw tight. Twist the ends two turns and push them through a lead seal.

(5) Wrap the ends of the wires once around the twisted length from A to C from opposite directions, and push the wire ends through the lead seal again. Clamp the seal to secure the wire ends.

MOTOR REPAIR

GENERAL

Disassembly of the motor is rarely required except for a replacement of the motor rotor, stator, or bearings. Do not disassemble the motor unless it is necessary and a clean, well-equipped shop is available. The inner shaft seal can be replaced without extensive disassembly.

INNER SHAFT SEAL REPLACEMENT

a. Remove the suction casing and impeller. See PUMP DISASSEMBLY (page 15).

b. Remove retaining ring (1, figure 11) and pull off shims (2). Tie together and tag the shims, or measure and record their thickness to facilitate reassembly. Use a screwdriver to pry out seal assembly (3). No further disassembly is required. Do not discard retaining ring (1) or shims (2). Discard and replace the seal assembly if possible. Reuse of the seal is not recommended.

c. Use a clean cloth to wipe the bore in the motor housing to remove all grease, dirt, and water. Inspect motor rotor shaft (5) for scoring and other damage. Surface damage to the shaft rarely occurs, but it if does, the rotor must be replaced as described below.

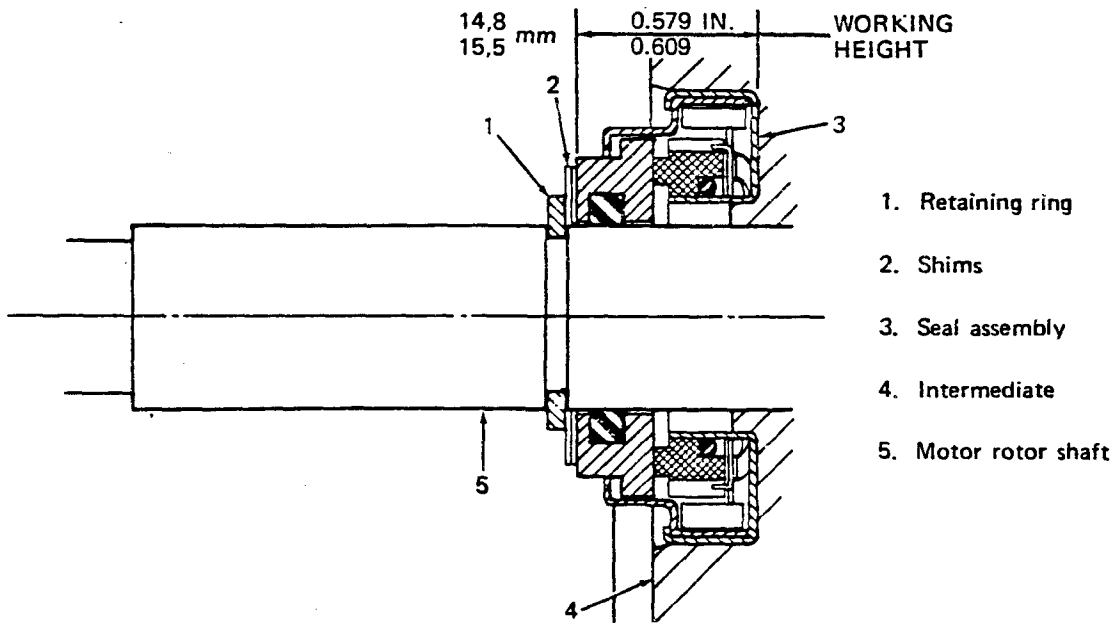

Figure 11. Cross Sectional View of Typical Inner Shaft Seal

d. When installing a new seal, select shims (2) to obtain a seal working height of 0.579 to 0.609 inches as shown in figure 11. This is the distance from the bottom of the bore in intermediate (4) to the motor side of shims (2) when the retaining ring (1) is installed.

CAUTION

Press only on the outer edge of the seal assembly to prevent damage to polished surfaces of rotating and stationary seal faces.

e. Lubricate the outer edge of the seal assembly with petroleum jelly and press it into the bore in the intermediate, using a driver that will contact only the outer edges of the seal assembly. When the seal assembly is bottomed in the bore, install shims and retaining ring (1). Check that all parts are seated properly.

f. Reinstall the impeller and suction casing. See PUMP REASSEMBLY (page 18).

g. Refill the seal cavity with oil as described in the LUBRICATION section (page 14).

MOTOR DISASSEMBLY

WARNING

Do not remove the control box cover in an explosive atmosphere.

Opening the box in an explosive atmosphere could cause fire or explosion.

a. Disconnect the pump from the control box. Remove the suction casing, impeller, seal plate, and outer shaft seal. See PUMP DISASSEMBLY (page 15).

b. Remove the terminal housing and disconnect the pump power cable from the motor. See CABLE AND TERMINAL REPAIR (page 19). To facilitate disassembly, remove the handle from the motor housing.

c. Remove the inner shaft seal as described above (page 23).

d. Use a large snap ring pliers to remove the retaining ring which retains the intermediate in the motor housing. See figure 12.

e. Pull out the assembled intermediate and motor rotor shaft. Withdraw the rotor carefully to prevent damage to the stator. Pull out the wavy spring washer if it was not removed with the rotor.

f. Pull off the intermediate and remove the O-ring. Do not remove the bearings from the rotor shaft unless they are defective.

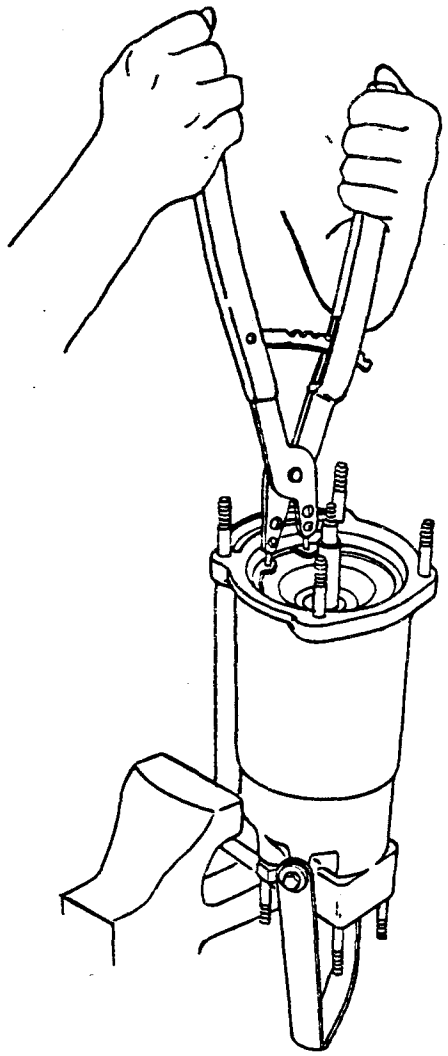

Figure 12. Removing Intermediate Retaining Ring

g. Do not remove the stator unless it is defective. If the windings are open, if the winding insulation resistance is low, or if the stator core has been damaged, pull out the motor bushing. Disengage the lock clip which retains the pipe plug and remove the pipe plug from the side of the motor housing. Remove the setscrew underneath the plug and carefully pull the stator from the motor housing.

CLEANING AND INSPECTION OF MOTOR PARTS

WARNING

Use cleaning solvents only in a well-ventilated area free from excessive heat, sparks, and flame. Most cleaning solvents are toxic and flammable. Read and observe all precautions printed on solvent containers.

a. Clean the disassembled motor parts in commercial cleaning solvent, diesel fuel oil, or kerosene to remove all grease, oil, and dirt. When cleaning the assembled rotor and bearings, wipe the rotor with a clean cloth dampened with solvent to prevent solvent from entering the sealed bearings. Handle the stator carefully to prevent damage to the windings.

NOTE

The reuse of old gaskets may result in premature leaking and loss of pump efficiency. Use the gasket kit listed to replace all pump and motor gaskets at each overhaul.

b. Inspect the rotor for scored or separated laminations; nicks, scoring, and other damage on the shaft adjacent to the shaft seals; and for surface damage, a damaged keyway, and damaged threads at the impeller end of the shaft. Replace the rotor and its bearings if the rotor is damaged.

c. Rotate the motor rotor bearings by hand to check for rough or binding operation. Replace the bearings if their operation is rough. Remove the bearings with a bearing puller or press them from the rotor shaft with an arbor press. Refer to the parts drawing in the appendix for part numbers. Polish the shaft with crocus cloth, and press on new bearings until they seat on the shaft shoulders.

d. Inspect the motor housing and the intermediate for cracks, and for nicks and other damage to the mating surfaces. Tighten loose studs; replace bent or damaged studs.

CAUTION

Do not attempt to rewind the stator. Winding tolerances are closely controlled by the manufacturer to ensure safe and efficient operation. Unauthorized rewinding of the stator can cause operating problems and equipment damage.

e. If the stator is damaged or if its insulation is defective, return it to Gorman-Rupp for repair. No field repairs are authorized.

MOTOR REASSEMBLY

a. If the stator was removed, slide a plastic or cardboard sleeve over the stator leads to protect them during installation. Carefully push the stator into the motor housing until it bottoms. Remove the protective sleeve from the stator leads. Install and tighten the setscrew and check that the stator is locked in place. Seal the pipe plug threads as specified on the parts drawing, and install the pipe plug to seal the setscrew hole. Retain the pipe plug with the lock clip.

b. Install the motor bushing. Check that the rotor bearings are seated against the shaft shoulders. Coat the intermediate O-ring with petroleum jelly and install it in the groove in the intermediate. Install the intermediate on the lower rotor bearing, tapping it lightly, if necessary, with a soft-faced hammer.

c. Install the wavy spring washer in the bottom of the motor housing bearing bore. Carefully install the rotor in the motor housing until the intermediate is below the retaining ring groove. Install the retaining ring. See figure 12.

d. Reinstall the inner shaft seal. See INNER SHAFT SEAL REPLACEMENT (page 23).

e. Connect the motor to the pump power cable and reinstall the terminal housing. See CABLE AND TERMINAL REPAIR (page 19).

f. Reinstall the outer shaft seal, seal plate, impeller, and suction casing. See PUMP REASSEMBLY (page 18). Refill the seal cavity as described in the LUBRICATION section (page 14).

APPENDIX

ADDITIONAL PUMP DATA AND OPTIONAL EQUIPMENT

This appendix contains the pump parts drawing which was in effect at the time the pump was manufactured. Refer to this drawing for all part numbers.

A wiring diagram for the pump control box is also included. Instruction sheets covering the installation. operation, and maintenance of all optional and accessory equipment shipped with the pump are contained in this appendix.

NOTE

When ordering pump or motor parts, be sure to provide pump serial number and pump model number shown on the pump nameplate. This information is required to ensure shipment of the correct parts.

WARRANTY

Pumping units manufactured by The Gorman-Rupp Company, Mansfield, Ohio, are guaranteed to be free from defects in material and workmanship for one year from date of shipment from factory in Mansfield, Ohio. The obligation under this Warranty, statutory or otherwise, is limited to replacement or repair at Mansfield, Ohio, factory or at a point designated by Gorman-Rupp, of such part as shall appear to us, upon inspection at such point, to have been defective in material or workmanship.

This Warranty does not obligate The Gorman-Rupp Company to bear the cost of labor or transportation charges in connection with replacement or repair of defective parts; nor shall it apply to a pump upon which repairs or alterations have been made unless authorized by Gorman-Rupp.

No Warranty is made in respect to engines, motors or trade accessories, such being subject to warranties of their respective manufacturers.

In Submersible pumps, pump and motor are integral and Submersibles are warranted as a unit. Since motor is subject to an important degree upon quality and performance of electrical controls, unit warranty is valid only when controls have been specified and provided by Gorman-Rupp.

No express implied or statutory warranty, other than herein set forth, is made or authorized to be made by Gorman-Rupp.

In no event shall The Gorman-Rupp Company be liable for consequential damages or contingent liabilities arising out of the failure of any Gorman-Rupp pump or parts thereof to operate properly.

REF No.	PART No	DESCRIPTION	TOT REQ.	
1	38222-429	SUCTION CASING	1	
2	38614-709	IMPELLER	1	
3	46512-036	SEAL ASS'Y	1	
4	25284-811	SEAL TYPE 18	1	
5	38272-830	SEAL PLATE	1	
6	38674-807	CASING GASKET	1	
7	25152-250	O-RING	1	
8	24121-077	RETAINING RING	1	
9	25152-248	O-RING	1	
10	31134-060	MOTOR BUSHING	1	
11	47113-042	STATOR	1	
12	47112-040	ROTOR	1	
13				
14	BM#4-03	DRIVE SCREW	12	SST
15	2613-DD	NAME PLATE	1	
16	10195-G	FLANGE GASKET	1	
17	10195	DISCHARGE FLANGE	1	
18	D-05	HEX NUT	4	
19	C-0506	STUD	4	
20	C-0510	STUD	4	
21	J-05	LOCK WASHER	4	
22	D-05	HEX NUT	4	
23	47351-011	CABLE ASS'Y	1	
24	27111-016	CABLE GRIP	1	
25	38381-205	TERMINAL HOUSING	1	
26	AK#10	TOOTH TYPE LK WASH	2	
27	X#10-01-1/2	RD HD MACH SCREW	2	
28	25154-141	O-RING	1	
29	S-1718	CONNECTOR	5	
30	18666-068	TAPE (AS REQ)		
31	13880	TERMINAL PLATE (U)	1	
32	31281-017	MOTOR LEAD BUSHING	1	
33	13881	TERMINAL PLATE (L)	1	
34	13879	SOCKET HD CAPSCREW	4	
35	S-1554	WAVY SPRING WASHER	1	
36	23282-004	BALL BEARING	1	
37	38311-017	MOTOR HOUSING	1	
38	GA-0501-1/2	ALLEN HD SET SCR	1	
39	38649-022	PIPE PLUG HEX HD	2	SST
40	23282-004	BALL BEARING	1	
41	38261-016	INTERMEDIATE	1	
42	P-04	PIPE PLUG	1	SST
43	C-0610	STUD	4	SST
44	J-06	LOCK WASHER	4	SST
45	D-06	HEX NUT	4	SST
46	N-0202 1/2	KEY	1	SST
47	BC-06	NYLON LOCK NUT	1	SST
48	21161-808	FLAT WASHER	1	SST
49	BT-0508	NYLON CAPSCREW	4	
50	46611-004	STRAINER ASS'Y	1	
51	10185-A	HANDLE	1	
52	10194	BUSHING	2	
53	B-0604	HEX HD CAPSCREW	2	
54	J-06	LOCK WASHER	2	
55	K-06	FLAT WASHER	2	
56	S-668	RETAINING RING	1	
57	513-A	SHIM SET (AS REQ)	1	
58	BT-0403	NYLON CAP SCREW	1	SST
59	KB-04	WASHER	1	SST
60	33645-008	LOCK CLIP	1	
61	669	SHIM SET (AS REQ)	1	
62	31311-004	SAFETY WIRE	1	
63	21188-002	LEAD WIRE SEAL	1	
64	11309	BRACKET	1	
65				
66	26518-666	HOSE CLAMP	1	SST

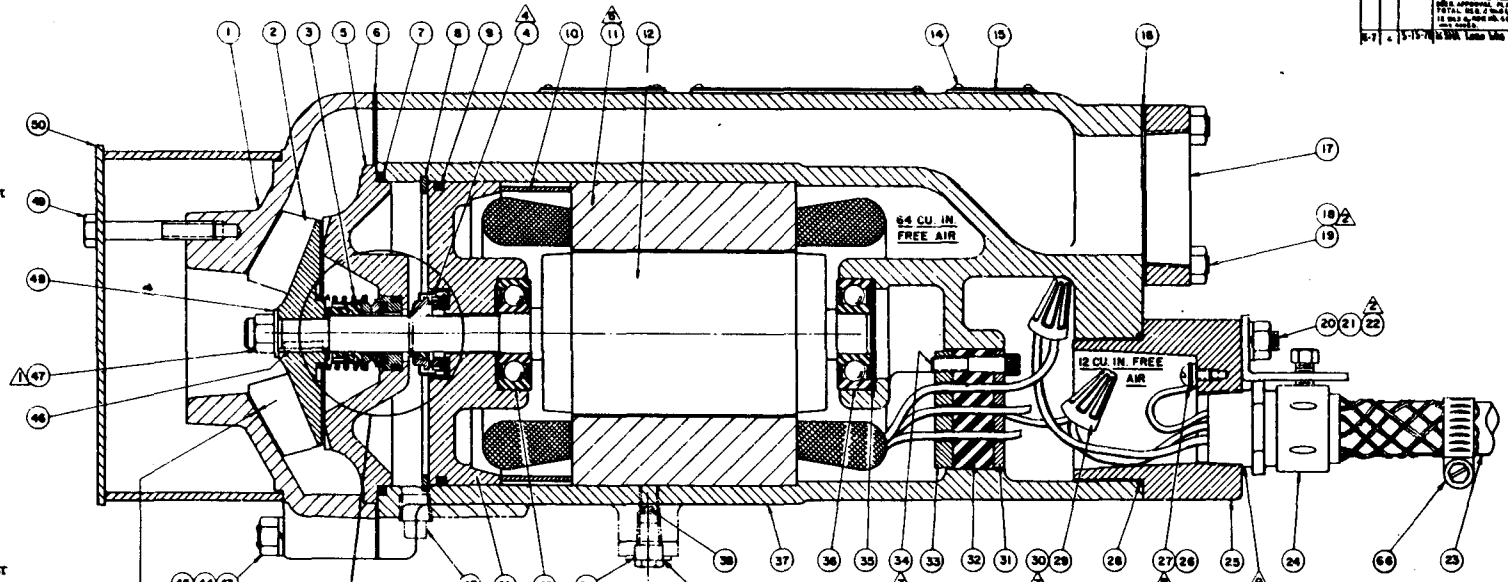

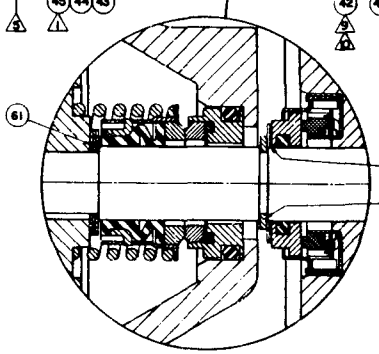

DETAIL OF SEAL

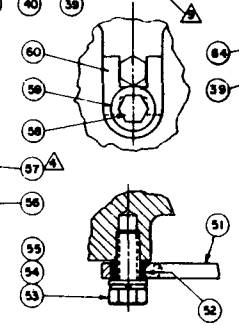

CARRYING HANDLE ASSEMBLY

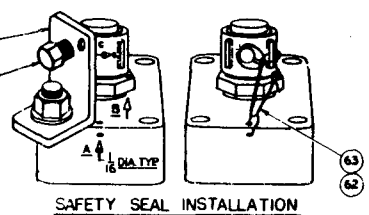

SAFETY SEAL INSTALLATION TO CABLE GRIP ASS'Y

PROCEDURE:

1 - TIGHTEN HEX BODY AND DRILL HOLE "B" IN LOCATION APPROX. 45° COUNTER CLOCKWISE FROM HOLE "A".

2 - INSERT SEAL WIRE (ITEM 62) THRU HOLE "B". EQUALIZE WIRE LENGTHS. TWIST WIRES TOGETHER APPROX. 10 TURNS. INSERT ONE END THRU HOLE "A" AND DRAW TIGHT. TWIST FREE ENDS APPROX 10 TURNS.

3 - TIGHTEN CABLE GRIP NUT AND DRILL HOLE "C" THRU RIB LOCATED SIMILAR TO HOLE "B".

4 - INSERT ONE END OF TWISTED WIRE INTO HOLE "C" AND DRAW TIGHT. TWIST TWO TURNS AND PUSH BOTH ENDS THRU LEAD SEAL (ITEM 63). ROUTE FREE ENDS AROUND TWISTED PORTION OF WIRE (HOLE "A" TO "C") FROM OPPOSITE DIRECTIONS. AGAIN PUSH ENDS THRU SEAL AND CLAMP.

1. USE NEVER-SEEZ ON THD'S & TORQUE TO 240 IN. LBS.-20 FT. LBS.
2. USE NEVER-SEEZ ON THD'S & TORQUE TO 132 IN. LBS.-11 FT. LBS.
3. TIGHTEN ALTERNATELY AND EVENLY TO 48 IN. LBS.-4 FT. LBS.
4. SHIM WORKING HEIGHT OF SEAL (4) TO .579 MIN .609 MAX. USING SHIMS ITEM (57)
5. SHIM IMPELLER (2) TO .008-.015 FACE CLEARANCE.
6. SLIP A SLEEVE OVER STATOR LEAD WIRES BEFORE STATOR INSTALLATION TO PREVENT DAMAGE TO LEAD WIRE.
7. USE UNDERWATER TAPE ITEM (30) ON ALL CONNECTORS. RUN THE TAPE BETWEEN THE CONNECTORS AND DOUBLE BACK. FINISH THE ASSEMBLY BY STRETCHING THE TAPE AND WRAPPING AROUND THE CONNECTOR AND CONDUCTORS.
8. CONNECT GROUND (GREEN WIRE) AND GROUND CHECK (YELLOW WIRE) AT SEPARATE POINTS PROVIDED IN TERMINAL HOUSING.
9. USE LOCTITE PIPE SEALANT WITH TEFLON #92 (G-R P/N 18771-055) ON ALL PIPE PLUGS AND THREADS OF CABLE GRIP ASS'Y.
10. FILL SEAL CAVITY AT THIS LOCATION (APPROX. CAPACITY 1/2 PINT P/N 9568).

46127-020 D

S2812 460V 3P

REVISIONS				
SYM	DATE	RECORD	DR	CK
A	5-24-77	[illegible]	PL	[illegible]
B-7	4	5-15-78	[illegible]	[illegible]

REF ASS'Y MODEL S2812

THE GORMAN-RUPP CO.
MANSFIELD, OHIO

CODE IDENT NO. 25567 DR KR
DO NOT SCALE DRAWING CK [illegible]
DATE 2-25-76 SCALE FULL APP [illegible]
TITLE CROSS SECTION ASS'Y
DWG NUMBER 46127-020 REV D

47631-031

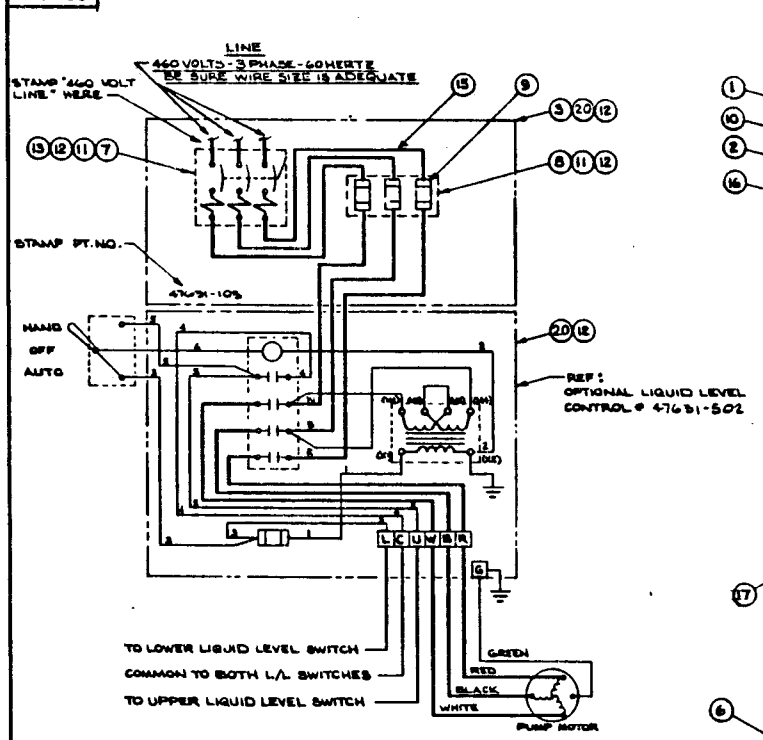

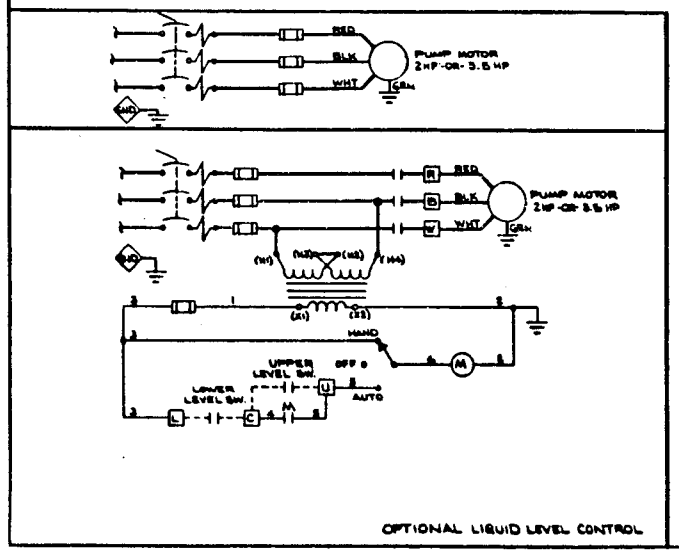

OPTIONAL LIQUID LEVEL CONTROL

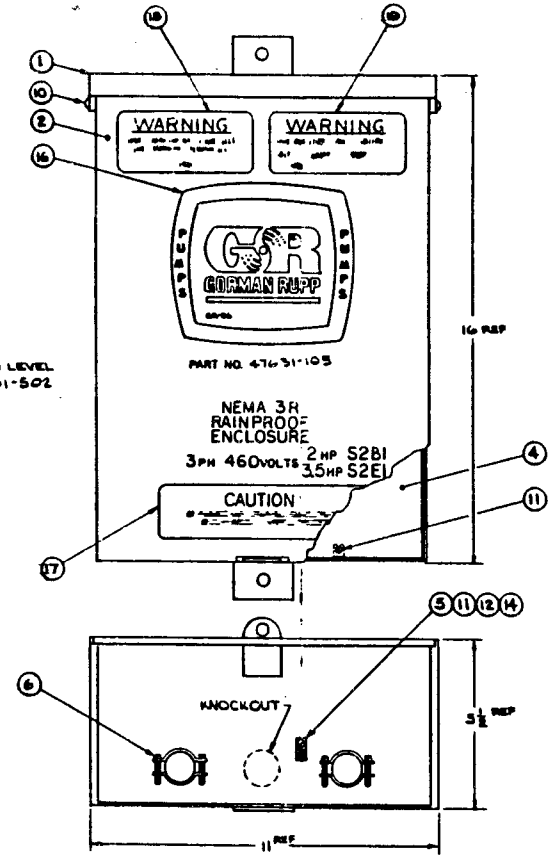

ITEM	QTY	PART NO.	DESCRIPTION	REMARKS
1	1	42821-065	ENCLOSURE	
2	1	42821-076	FRONT COVER	
3	1	34621-068	BACK PANEL	
4	1	42821-070	INNER PANEL	
5	2	27222-002	GROUND LUG	
6	2	27184-164	CABLE CLAMP	
7	1	27541-285	OVERLOAD UNIT	
8	1	27314-306	FUSE BLOCK	
9	3	27311-120	FUSE, 30 AMP	BUSS KTK 30
10	2	21118-008	TUBULAR RIVET 1/8	
11	13	CF#002	PHILLIPS HD MACH SCR	#8-32 x 1/2
12	17	AK#8	LOCKWASHER #8	
13	6	K#8	FLATWASHER #8	
14	1	D#8	HEX NUT #8	
15	2	18142-133	FT #10 AWG TEW/AWM BLK	
16	1	GR-06	G-R LOGO	
17	1	35816-068	CAUTION STICKER	
18	1	35816-066	WARNING STICKER	
19	1	35816-067	WARNING STICKER	
20	8	CF#001 (5991)	PHILLIPS HD MACH SCR	#8-32 x 1/4

REVISIONS			
SYM	DATE	RECORD	BY
B	9/8/77	ADDED WIT. CODES TO TERMS	
C	6/7/78	ADD TERM OF CONJ NEMA NAB CONN TO BRD	

47631-105 D

47631-105	
PART NUMBER	MAT'L SPEC
REF ASSY	MODEL 5231
DO NOT SCALE DRAWING	
THE GORMAN-RUPP CO. MANSFIELD, OHIO	
CODE IDENT NO 25587	
DATE 11-25-76 SCALE NONE	
UNLESS OTH. SPEC. FOLLOW MFG. TO	
DIM. UNITS	TOLERANCES
MAT'L SPEC NOTED	
NAME CONTROL BOX ASSY	
DWG NUMBER 47631-105	

For U.S. and International Warranty Information,
Please Visit www.grpumps.com/warranty
or call:
U.S.: 419—755—1280
International: +1—419—755—1352

For Canadian Warranty Information,
Please Visit www.grcanada.com/warranty
or call:
519—631—2870

THE GORMAN-RUPP COMPANY ● MANSFIELD, OHIO
GORMAN-RUPP OF CANADA LIMITED ● ST. THOMAS, ONTARIO, CANADA