B	19909	SHEET 1 OF 1

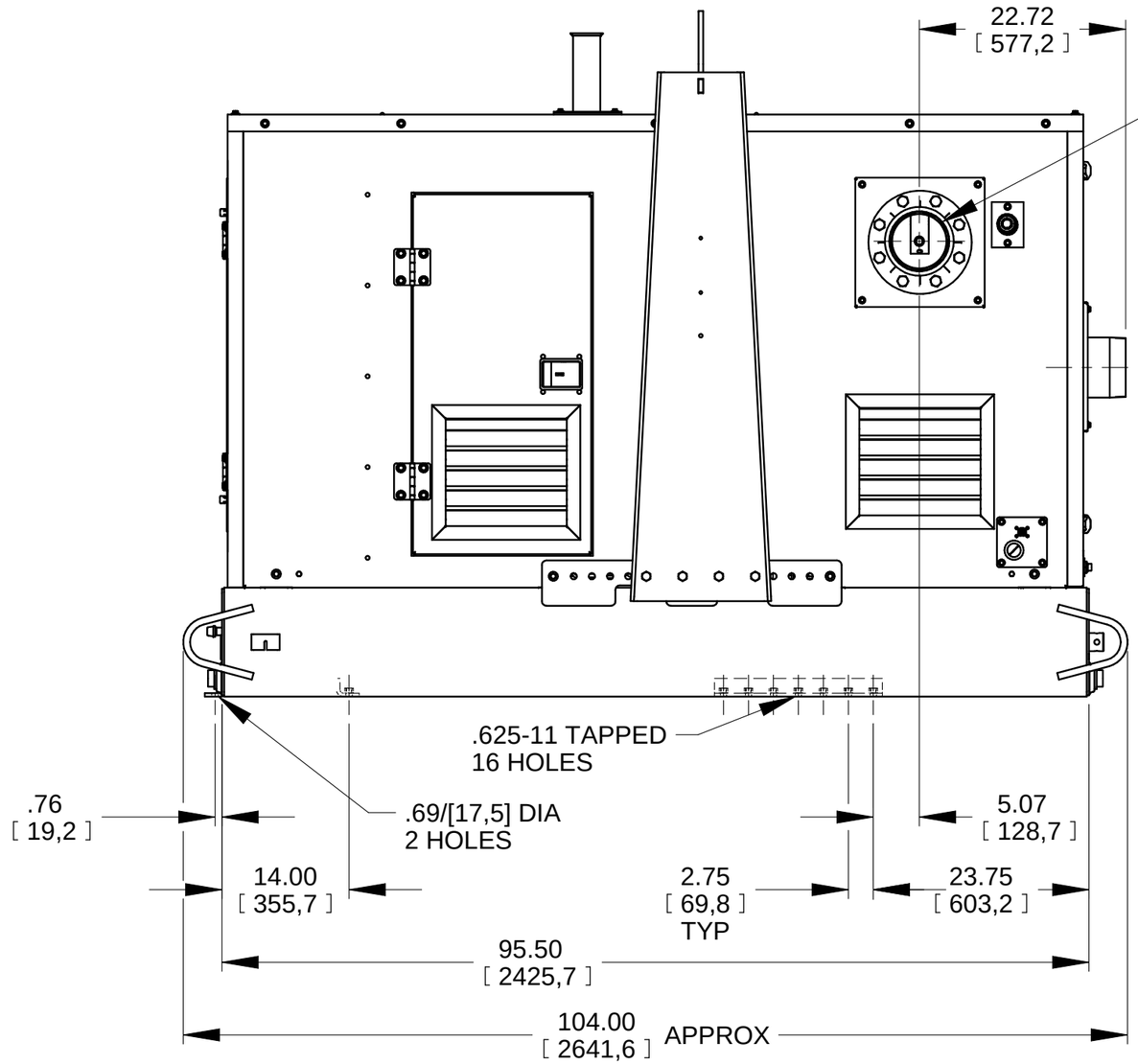

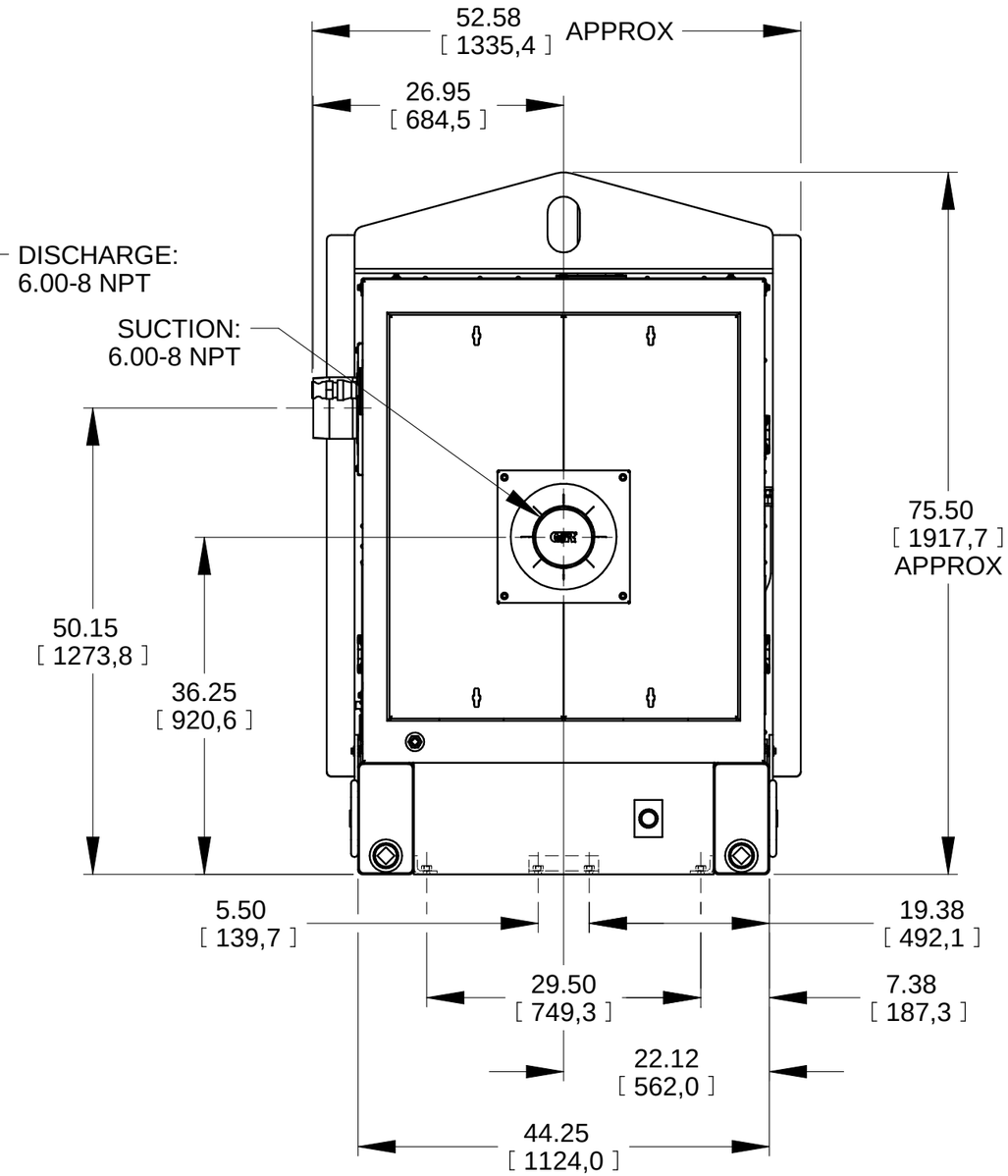

POWERED BY: JOHN DEERE 4045T S5 DIESEL ENGINE

DIMENSIONS:
INCHES
[MILLIMETERS]

THE GORMAN-RUPP CO. MANSFIELD, OHIO ST. THOMAS, ONTARIO	DRAWN BY JDM	SCALE 1/16	MODEL T6AS-4045T S5-ESP	
	DATE 7-18-23	REVISED -------	OUTLINE NUMBER 19909	