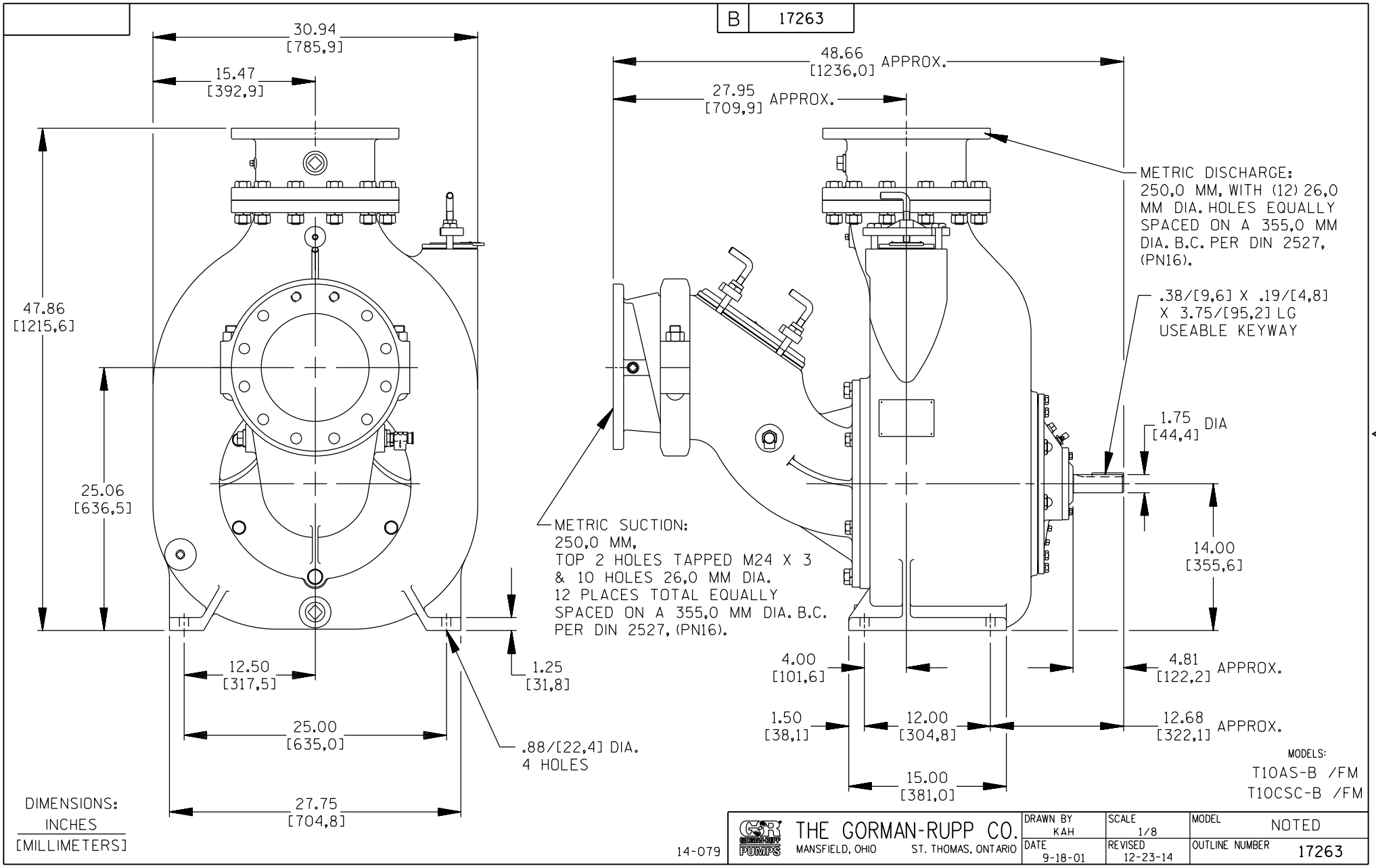
B 17263
30.94 [785,9]
15.47 [392,9]
47.86 [1215,6]
25.06 [636,5]
12.50 [317,5]
25.00 [635,0]
27.75 [704,8]
1.25 [31,8]
.88/[22,4] DIA. 4 HOLES
48.66 [1236,0] APPROX.
27.95 [709,9] APPROX.
METRIC DISCHARGE: 250,0 MM, WITH (12) 26,0 MM DIA. HOLES EQUALLY SPACED ON A 355,0 MM DIA. B.C. PER DIN 2527, (PN16).
.38/[9,6] X .19/[4,8] X 3.75/[95,2] LG USEABLE KEYWAY
1.75 [44,4] DIA
14.00 [355,6]
METRIC SUCTION: 250,0 MM, TOP 2 HOLES TAPPED M24 X 3 & 10 HOLES 26,0 MM DIA. 12 PLACES TOTAL EQUALLY SPACED ON A 355,0 MM DIA. B.C. PER DIN 2527, (PN16).
4.00 [101,6]
4.81 [122,2] APPROX.
1.50 [38,1]
12.00 [304,8]
12.68 [322,1] APPROX.
15.00 [381,0]
MODELS:
T10AS-B /FM
T10CSC-B /FM
DIMENSIONS: INCHES [MILLIMETERS]
14-079
THE GORMAN-RUPP CO.
MANSFIELD, OHIO ST. THOMAS, ONTARIO
DRAWN BY KAH
SCALE 1/8
MODEL NOTED
DATE 9-18-01
REVISED 12-23-14
OUTLINE NUMBER 17263