B-15751

B | 15751

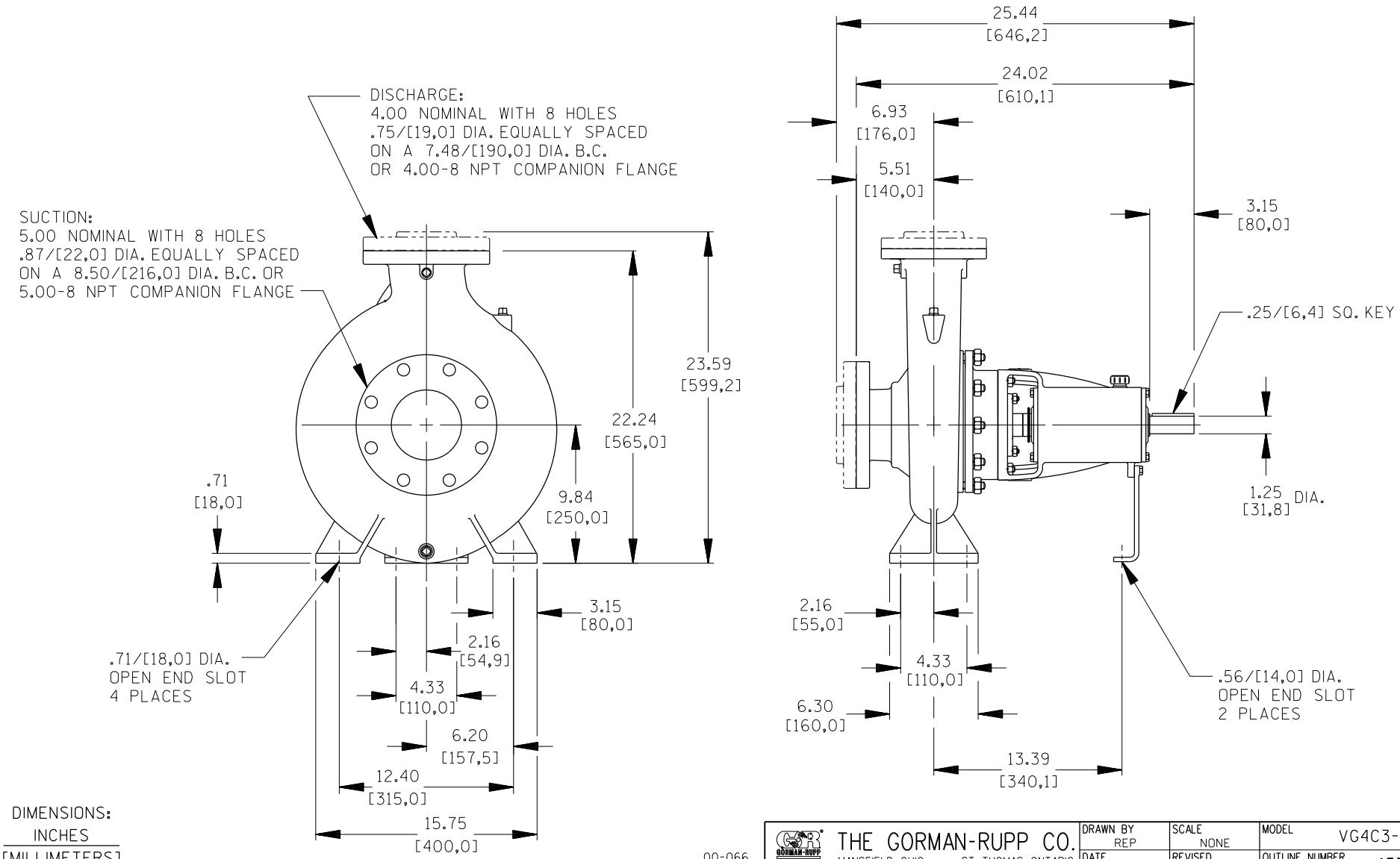

DIMENSIONS:
INCHES
[MILLIMETERS]

00-066

THE GORMAN-RUPP CO. MANSFIELD, OHIO ST. THOMAS, ONTARIO	DRAWN BY REP	SCALE NONE	MODEL VG4C3-B	
	DATE 7-10-01	REVISED	OUTLINE NUMBER 15751	